?	
1	041424
2	059602
3	056002
4	068502
5	056004
6	041410
7	059637
8	059623
9	059600
10	068501
11	068503
12	068489
13	068493
14	068492
15	063375
16	059632
98	059610

▶ **000**
▶ **01/10**
▶ **SFT-L**

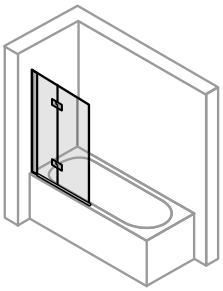
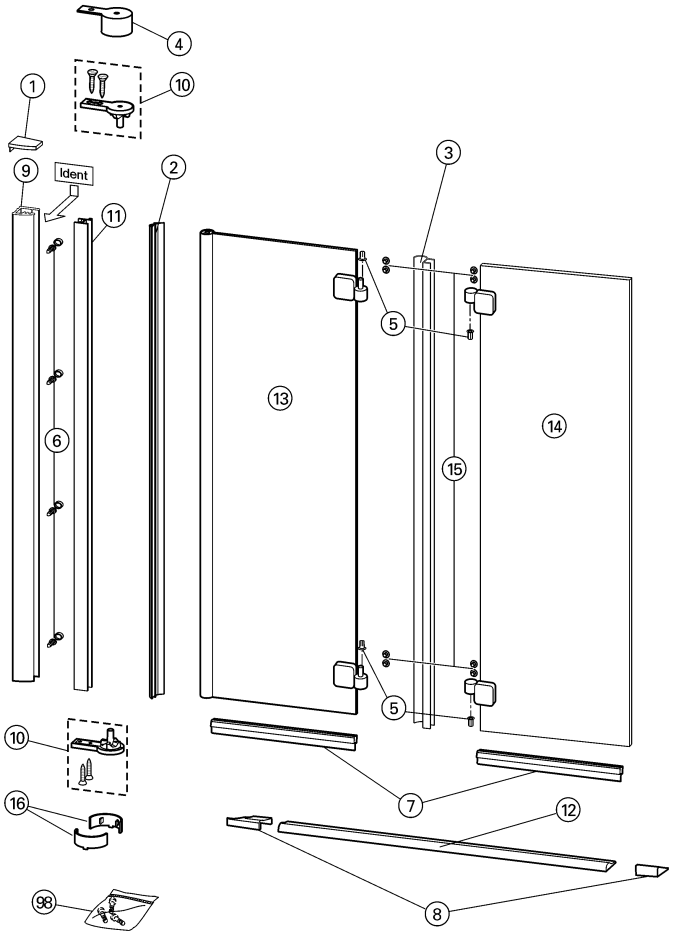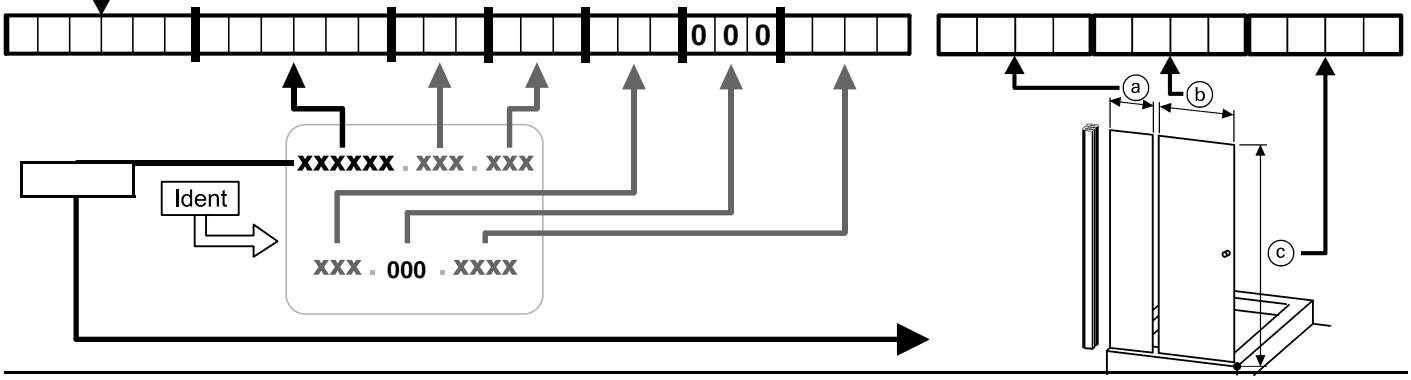
CJ3
IP1