# HÜPPE 501 Design pure 5E

▶ **000**
▶ **07/06**
▶ **STmfS**

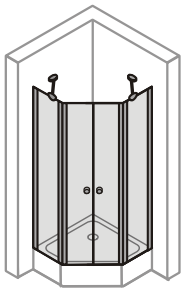

**IN1**
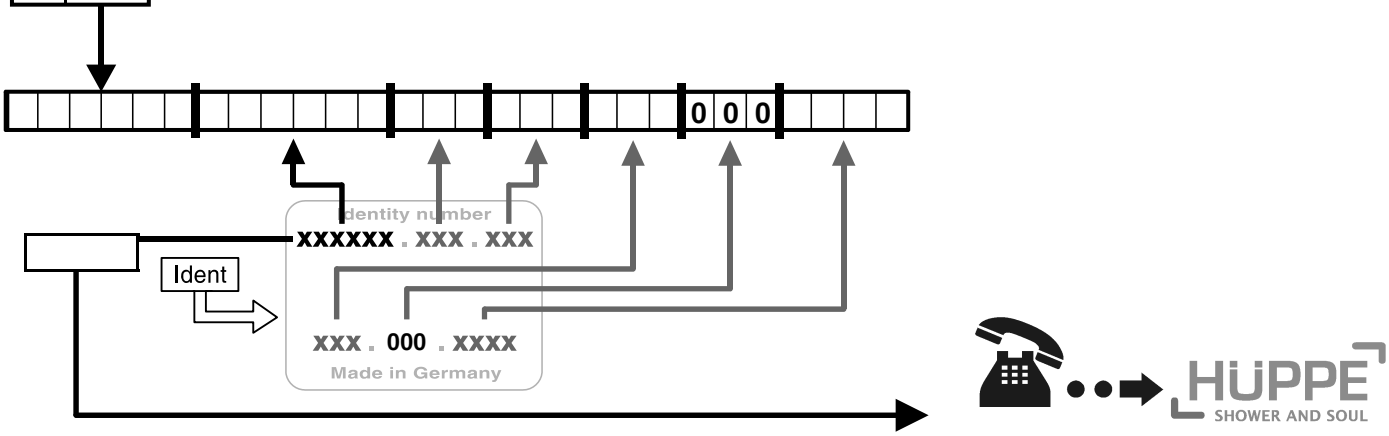
| ? | |
|---|---|
| 1 | 059450 |
| 2 | 059520 |
| 3 | 059525 |
| 4 | 059521 |
| 5 | 041440 |
| 6 | 059462 |
| 7 | 059461 |
| 8 | 059464 |
| 9 | 059465 |
| 10 | 059522 |
| 11 | 059523 |
| 12 | 059526 |
| 13 | 059527 |
| 14 | 041442 |
| 15 | 059210 |
| 16 | 059261 |
| 17 | 059528 |
| 18 | 059529 |
| 98 | 059524 |