00.051089.40

?	
1	061996
2	059330
3	059634
4	068499
5	068489
6	059602
7	059623
8	059601
9	068500
10	027902
11	025347
12	068498
13	068382
98	059611

▶ **002**
▶ **11/16**
▶ **ST FS Walk-In**

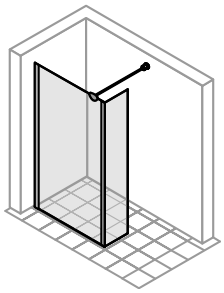

CG9
ILV

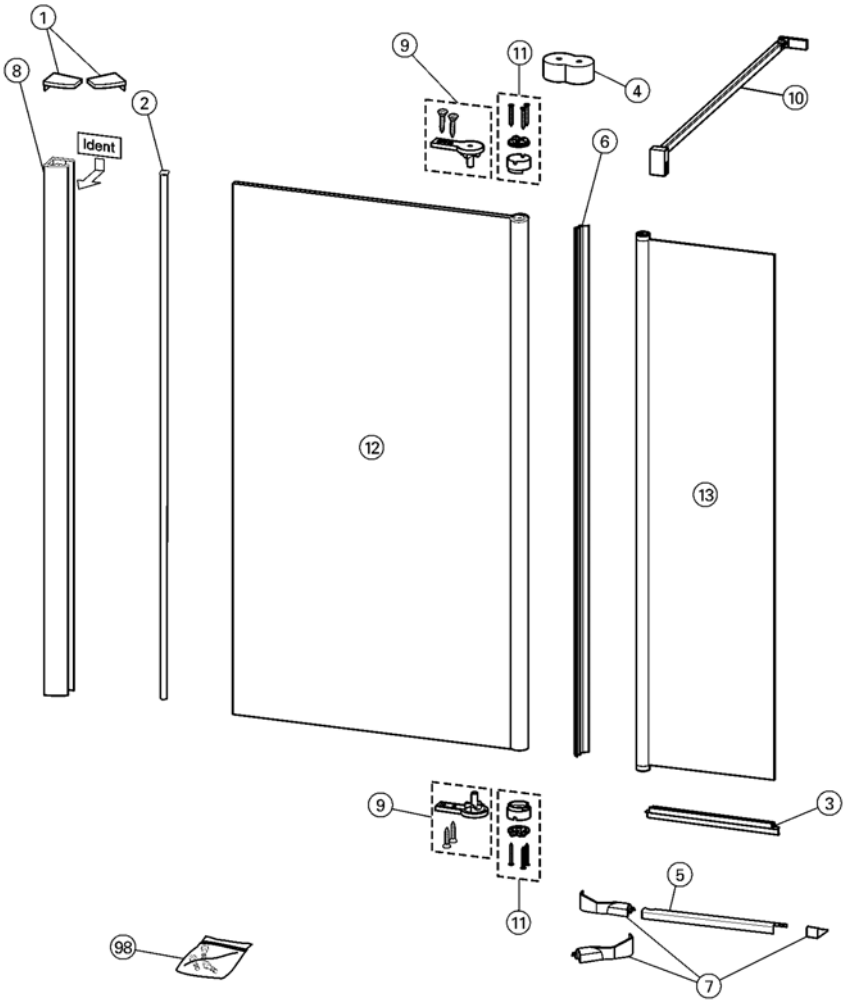

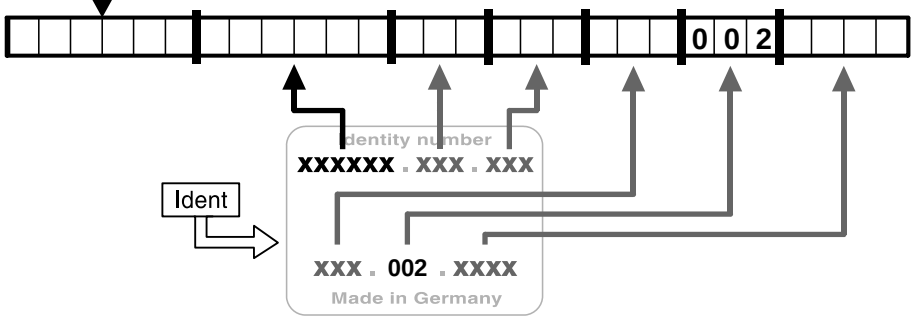

0005108940