00.051064.02

HÜPPE 501 Design pure 4E

▶ 000
▶ 07/06
▶ PTS

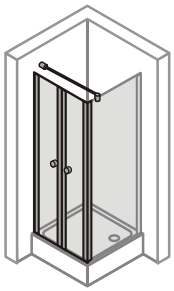

IL5
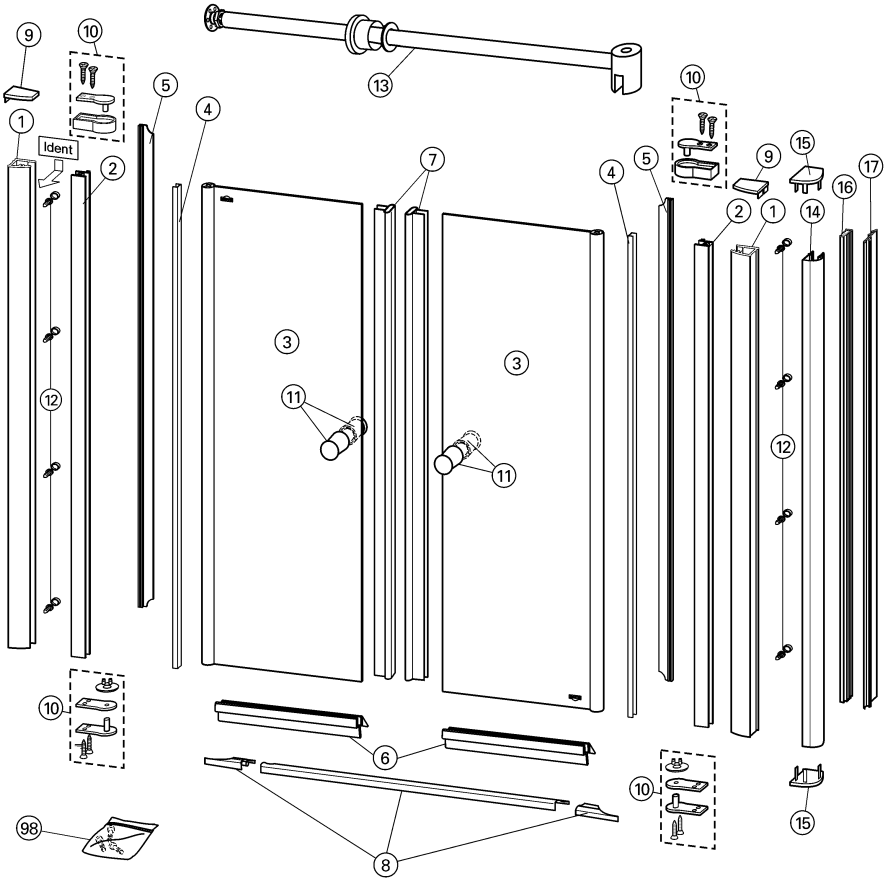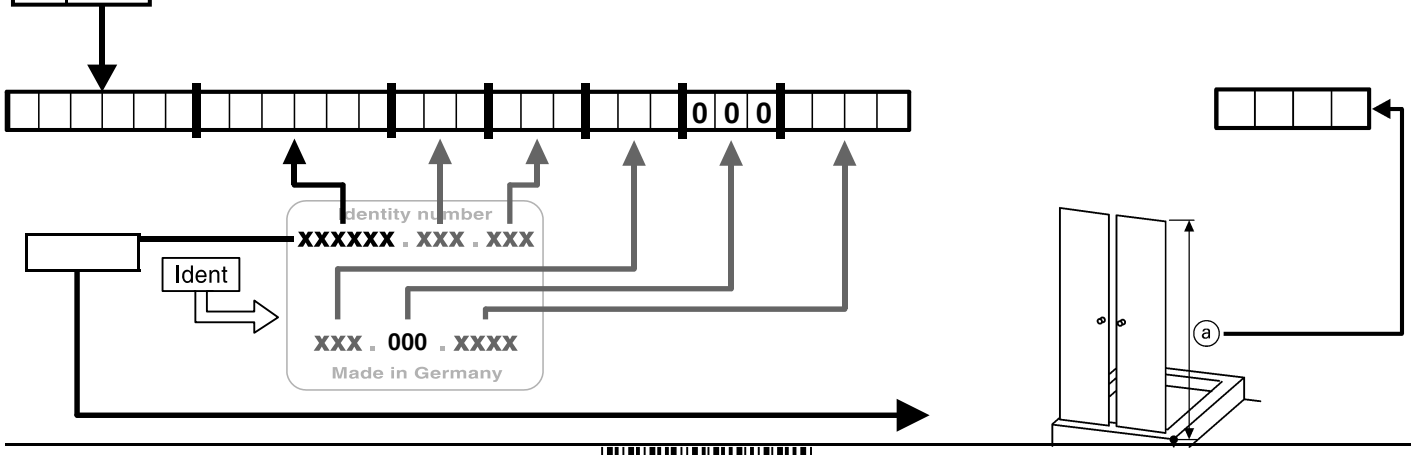
?	
1	059200
2	059201
3	059500
4	059205
5	059206
6	059481
7	059465
8	059501
9	041404
10	041409
11	059210
12	041410
13	059502
14	059503
15	059356
16	059308
17	059310
98	059506