00.051063.01

HÜPPE 501 Design pure 4E

▶ **000**
▶ **07/06**
▶ **PTN**

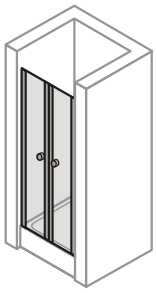

IL4
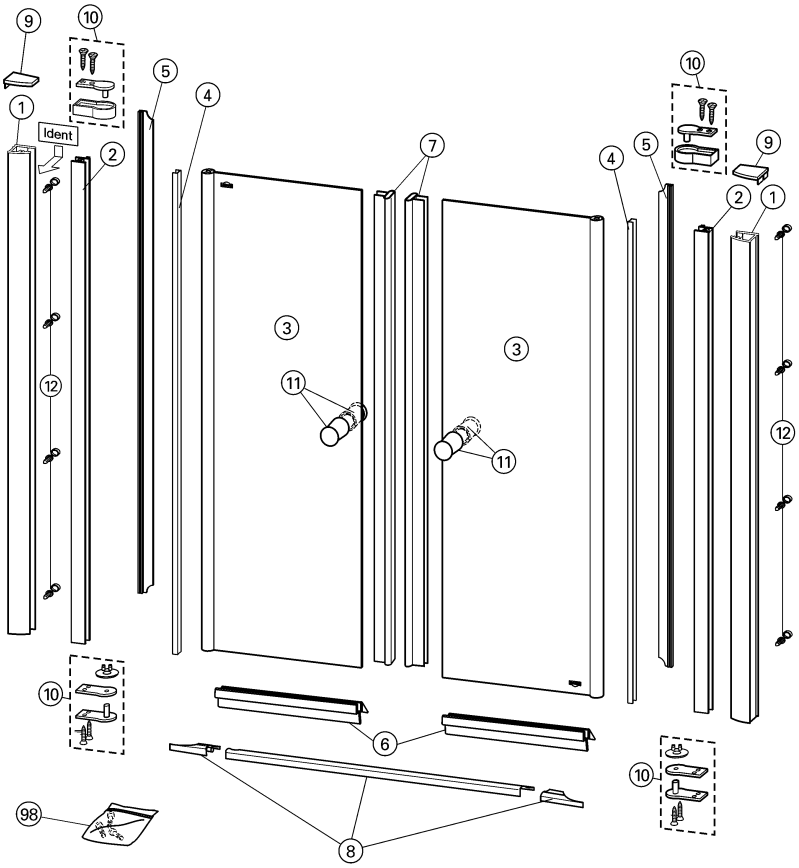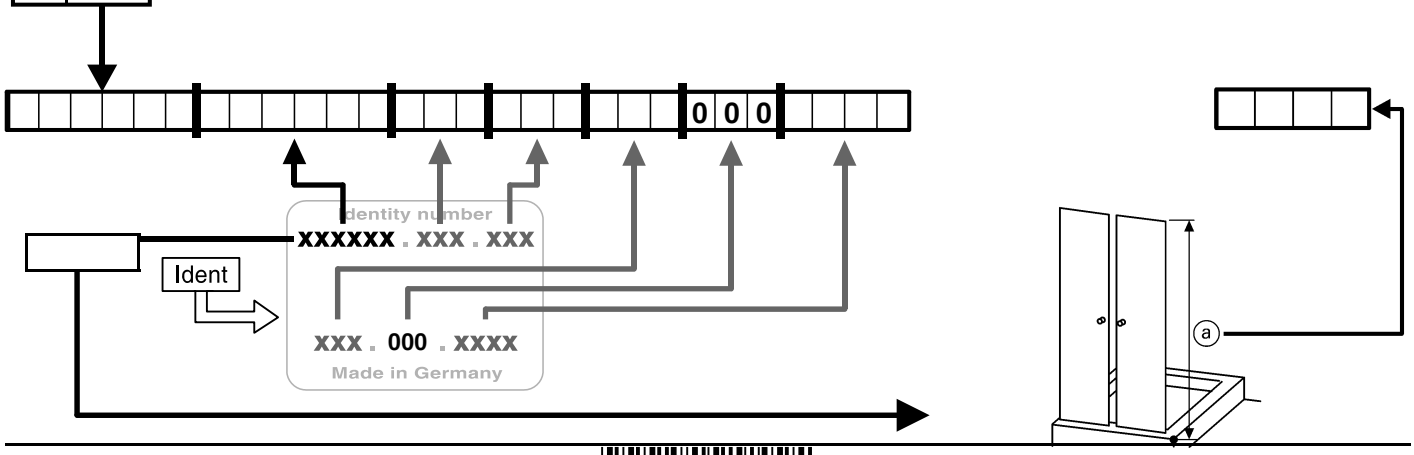
?	
1	059200
2	059201
3	059480
4	059205
5	059206
6	059481
7	059465
8	059482
9	041404
10	041409
11	059210
12	041410
98	059483