00.051062.01

HÜPPE 501 Design pure 4E

▶ 000
▶ 02/06
▶ SW

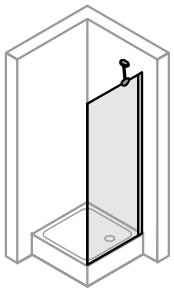

IL3
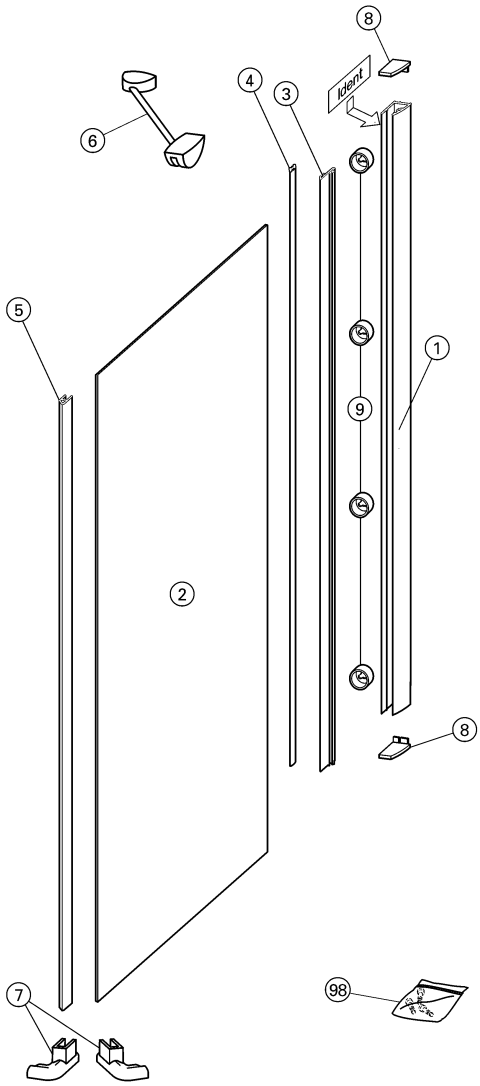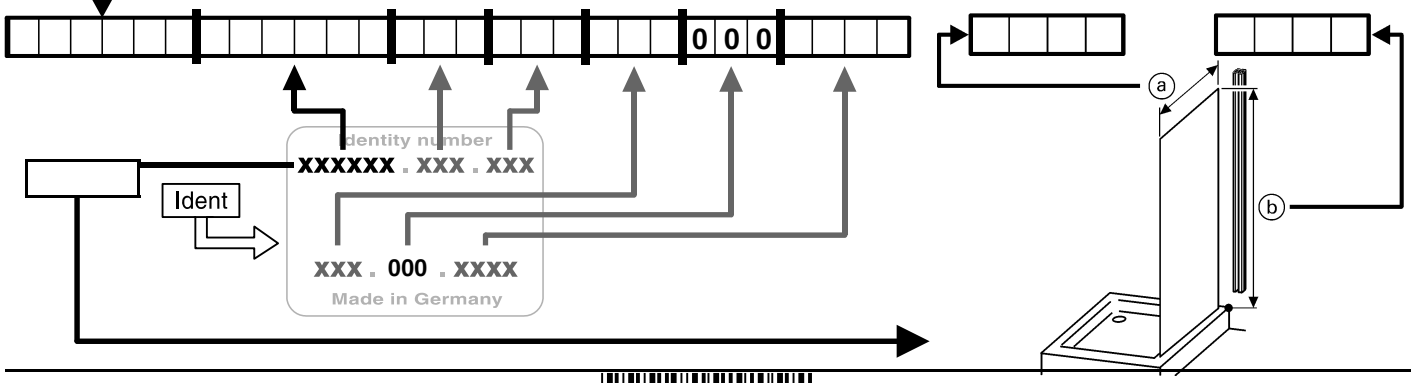
?	
1	069365
2	069360
3	069364
4	069363
5	069362
6	051710
7	059314
8	041440
9	059261
98	059313