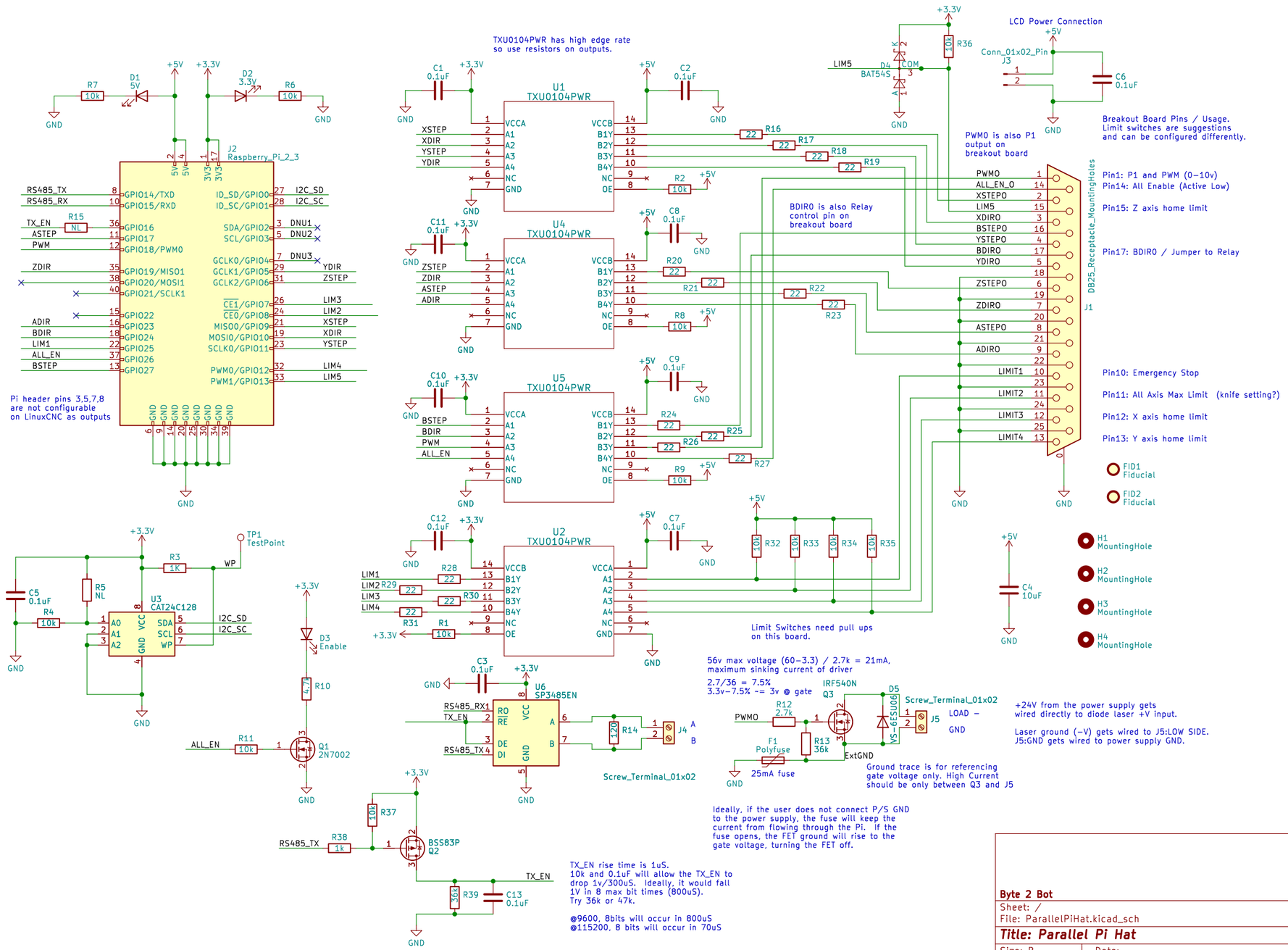

Byte 2 Bot

Sheet: /

File: ParallelPiHat.kicad_sch

Title: Parallel Pi Hat

Size: B	Date:	Rev: 2.0
KiCad E.D.A. kicad 7.0.1		Id: 1/1