34 ST JOHN

Name: BOLSENA SOLID SURFACE FREESTANDING BATH WITH OVERFLOW
Code: C01116_BB16

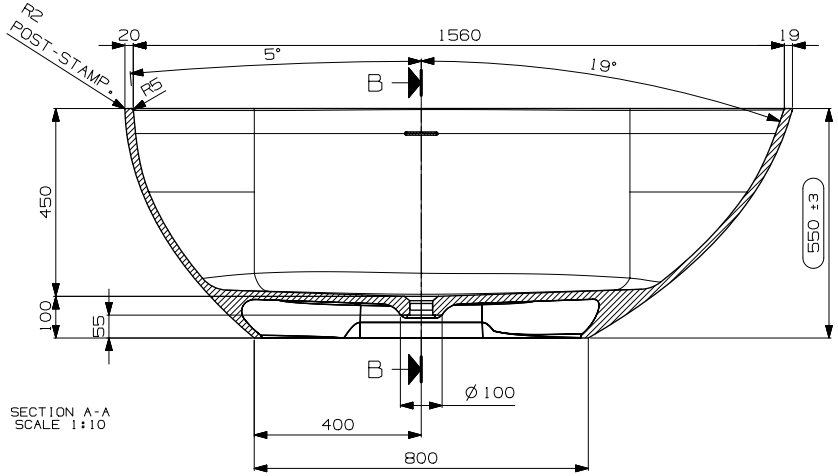

SECTION A-A
SCALE 1:10

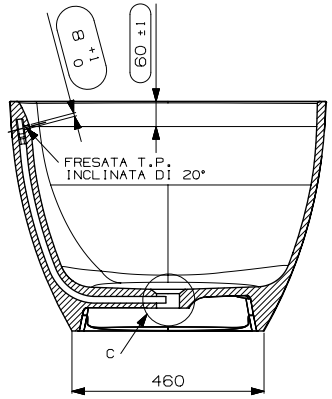

SECTION B-B
SCALE 1:10

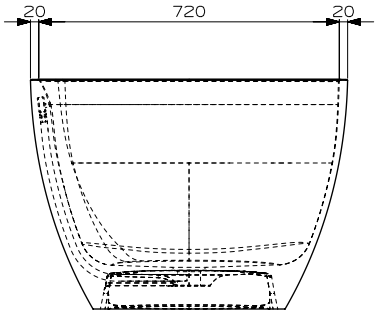

SCALE 1:10

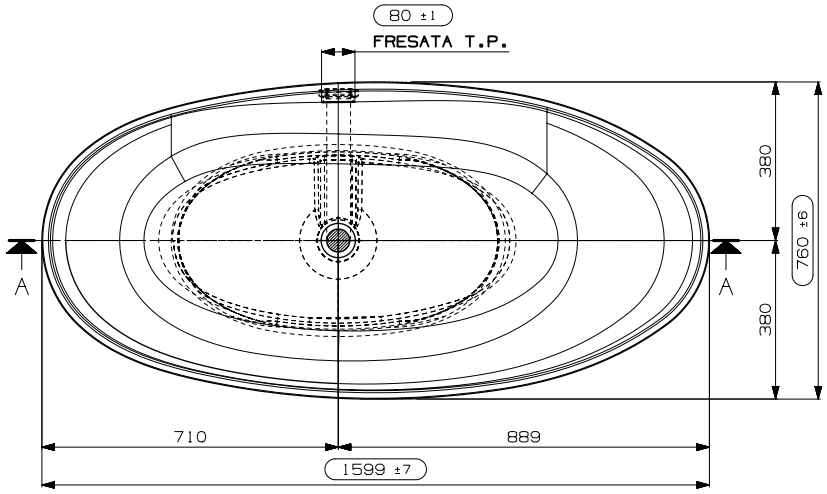

SCALE 1:10

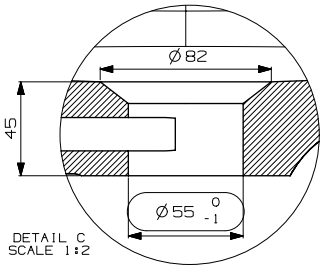

DETAIL C
SCALE 1:2

All dimensions are shown in mm