Heritage 2800

08.02.16

Main Frame

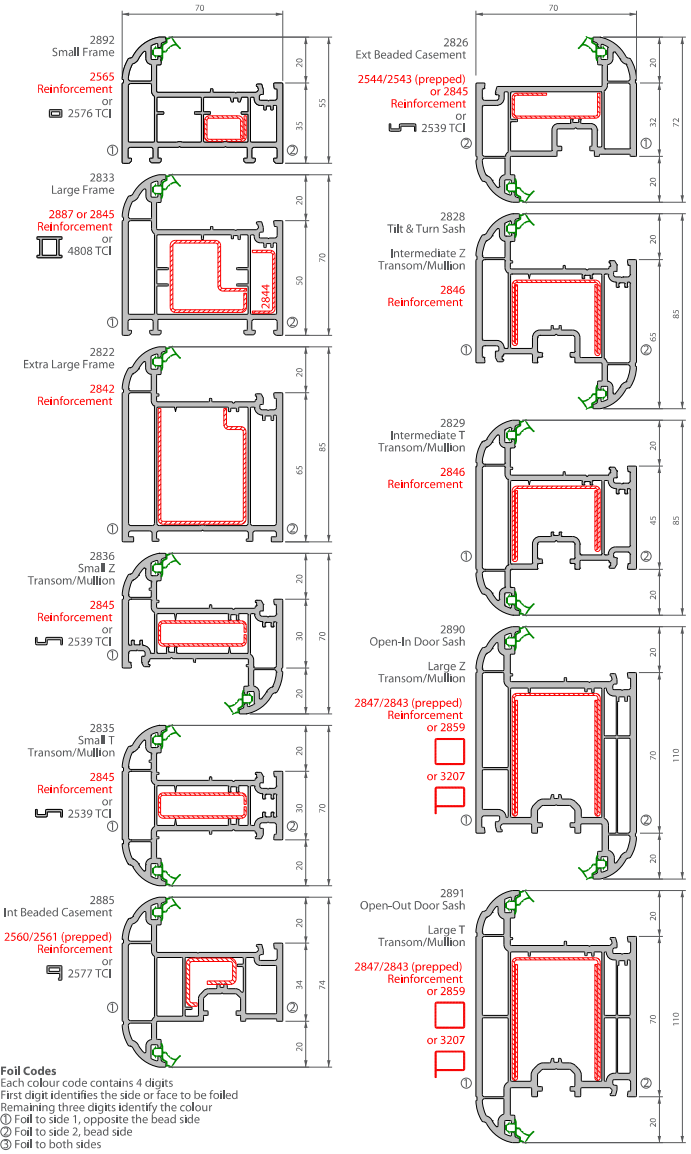

Foil Codes
Each colour code contains 4 digits
First digit identifies the side or face to be foiled
Remaining three digits identify the colour
① Foil to side 1, opposite the bead side
② Foil to side 2, bead side
③ Foil to both sides

Cills , Frame Extenders, Couplers

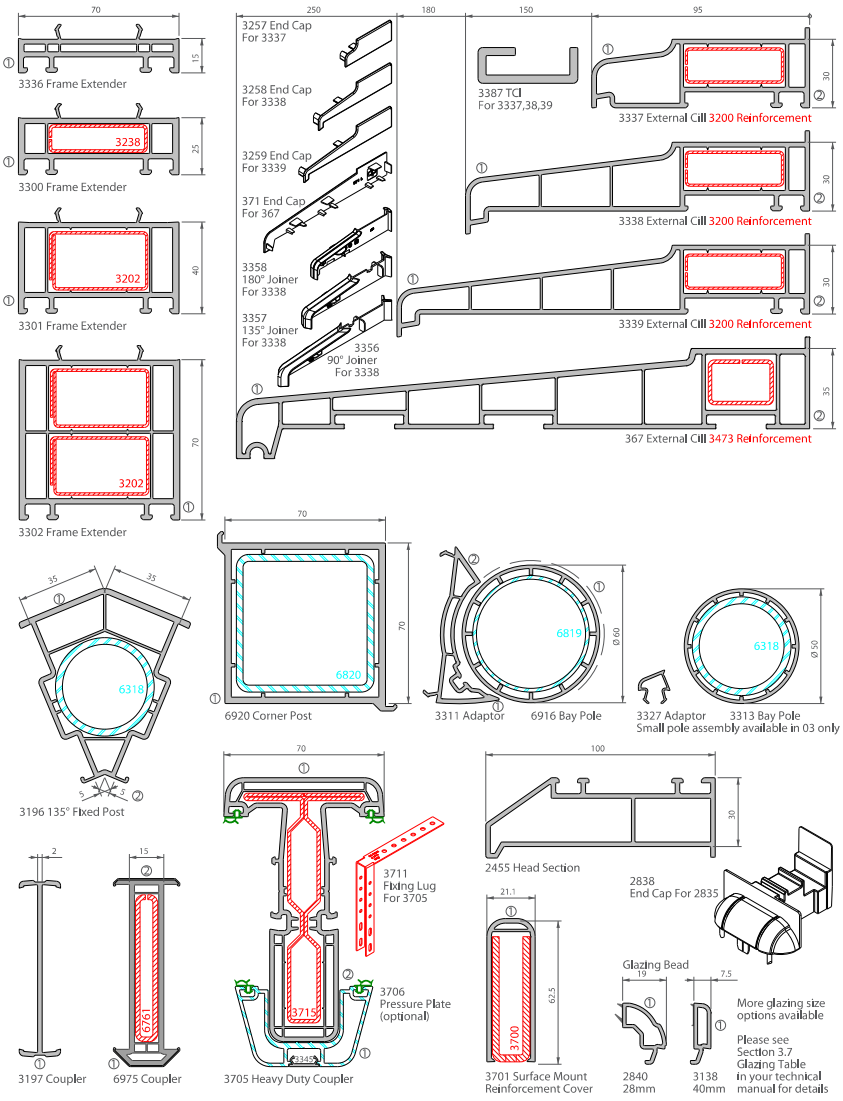
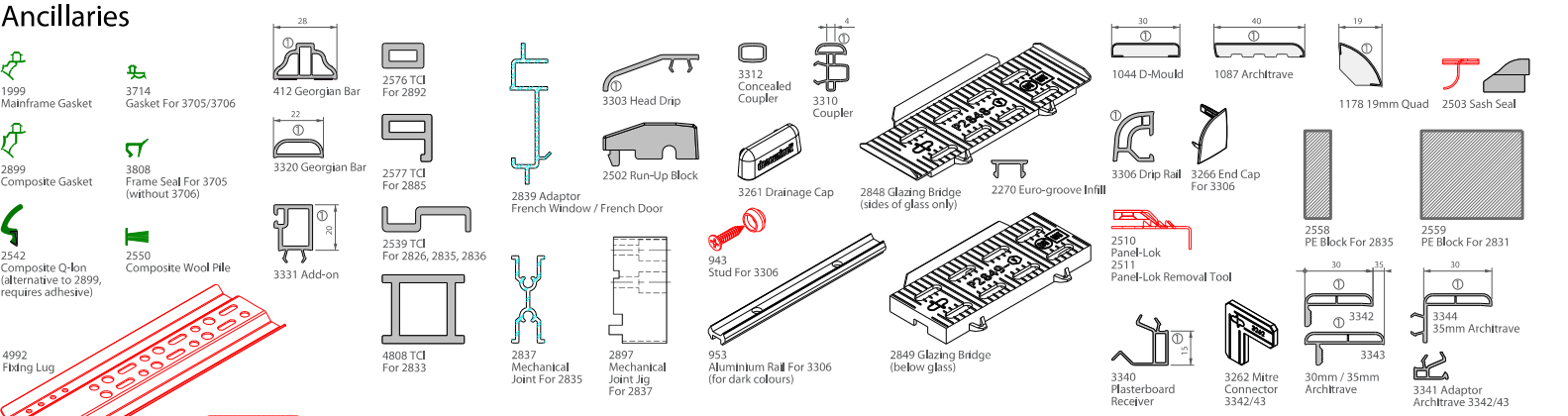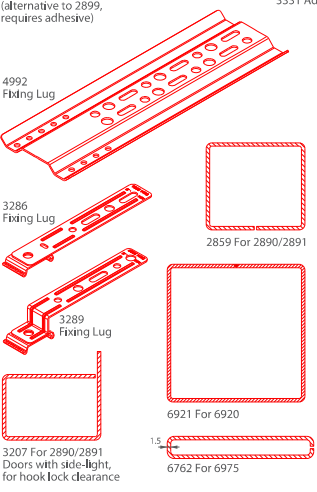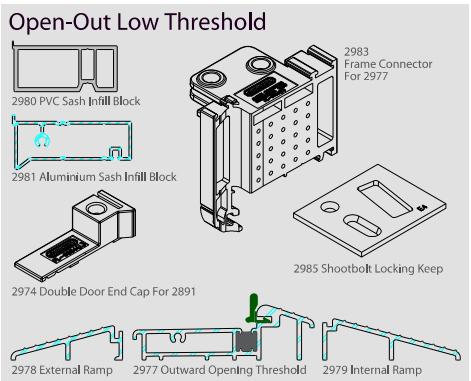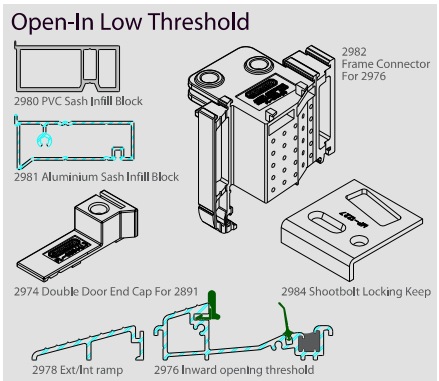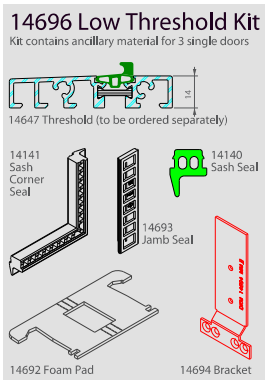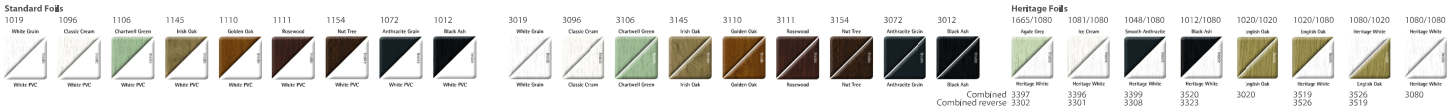
Ancillaries