HEXCAL® ELEVATE

Standing Desk User Manual

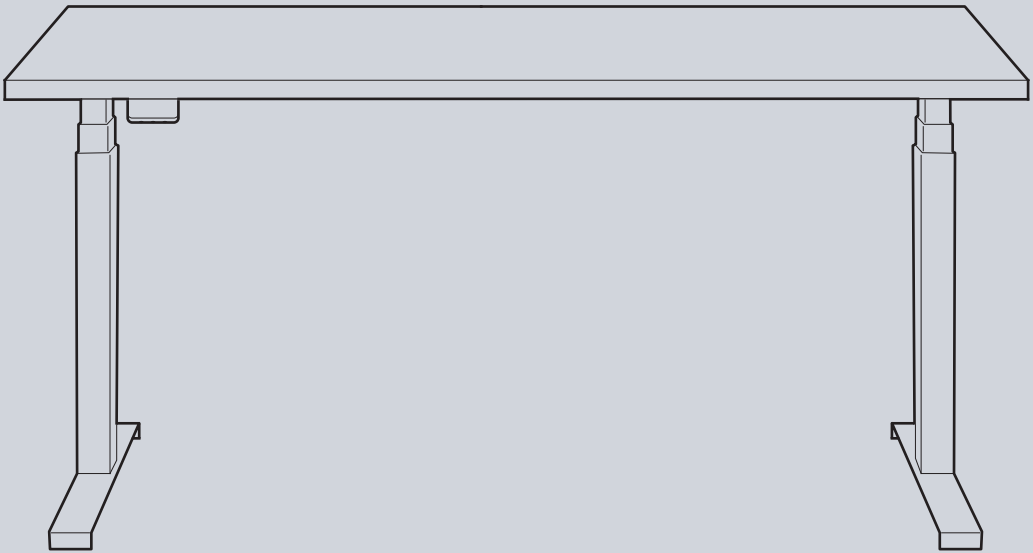

Presented by Hexcal Indoor Systems, a Hexcal® Company

Make Work Enjoyable.

TECHNICAL DETAILS

Dual Motors | Anti-collision system | High quality pre-drilled desktop

Low power consumption | Smart desk control | Award-winning design

- Height Adjustment Range: 62cm to 127cm (24.4” to 50.0”)
- Elevating Speed: 38mm/s unloaded (1.5”/s unloaded)
- Weight Limit: 160kg (350 lbs)
- Low noise level: 40 decibels or less
- Supports desktops from 1.4 to 2.0 m (55” to 78.7”) in length; 0.6 - 0.8 m (23.6” to 31.5”) in width

IMPORTANT SAFETY INSTRUCTIONS

Read all instructions before using this product. This is a height adjustable desk and inappropriate use can result in property damage or bodily harm. Hexcal does not accept warranty or liability claims for damages caused by improper use or handling of this desk.

This product contains high-tech, sensitive components; therefore, do not paint, burn, or disassemble your Hexcal products. If your product is damaged through misuse or abuse, it will not be covered under your warranty.

- **WARNING:** This product is intended for indoor dry work environments use only.
- **WARNING:** Only plug the desk into a proper local outlet. Unplug the desk from the electrical outlet before moving the desk or before adding/removing parts or accessories.
- **WARNING:** Do not open any desk component or insert any object in a desk component.
- **WARNING:** In case of spilled liquids, immediately unplug desk. Then clean spill with a dry cloth. Risk of desk failure or electric shock if desk components become wet.
- **WARNING:** Keep unsupervised children away from desk.
- **WARNING:** Do not use the desk with a damaged cord or plug.
- **WARNING:** Keep fingers and all body parts clear of the moving desk. Check surroundings on all sides before using the desk to ensure there are no immobile obstacles within the desk’s range of motion. Make sure all cords have appropriate length to allow full motion of the desk.
- **WARNING:** The desk should not be continuously adjusted up or down longer than necessary. Doing so could cause the motor and internal components to overheat, significantly shortening the product’s lifespan.

In The Box

In the Box

Box 1

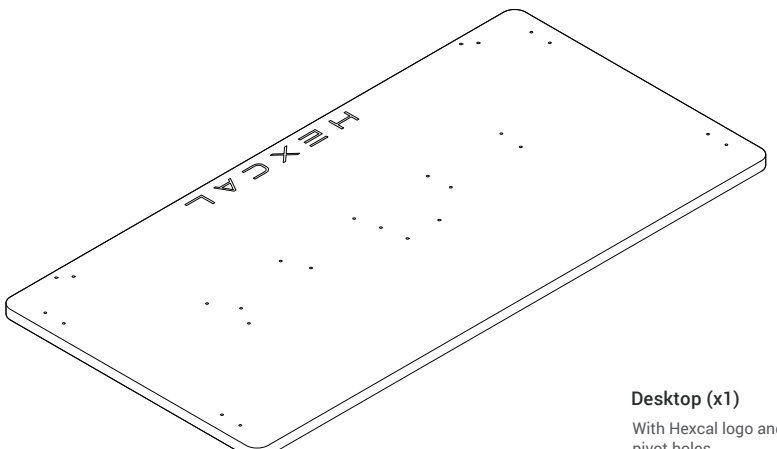

Desktop (x1)

With Hexcal logo and predrilled pivot holes

Optional Tools (Not Included)

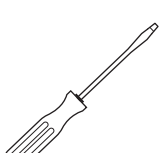

Slotted Screwdriver

Optional. For disassembly if necessary

Electric Screwdriver

Optional. For easier assembly

In the Box

Box 2 Contains Part A, B, C, D

A

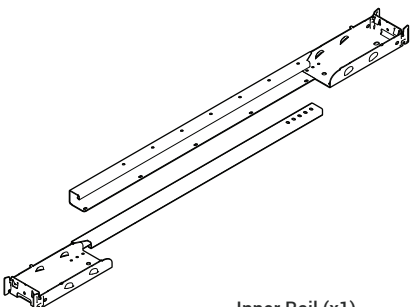

Inner Rail (x1)
Outer Rail (x1)

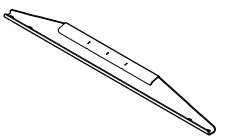

Cantilever (x2)

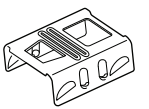

Clamp (x2)

Kick Lock (x2)

Rail Clip (x1)

B

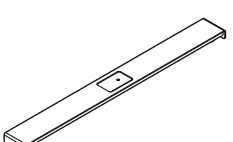

Foot (x2)

Leveler for Foot (x4)

Foot Screw (x8)

Used to fix the ***Feet***.
M6*16mm

In the Box

Box 2 Contains Part A, B, C, D

C

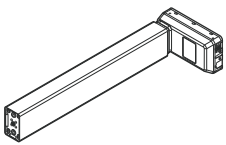

Lifting Column (x2)

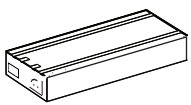

Control Box (x1)

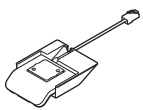

Desk Controller (x1)

Anti-collision
Desk Sensor (x1)

Motor Cable (x2)

Power Cable (x1)

D

Frame Screw (x20)

Used to fix the ***Rails*** and ***Cantilevers.***
M5*15mm

Control Box Screw (x2)

Used to fix the ***Control Box***.
M5*40mm

Desk Controller Screw (x2)

Used to fix the ***Desk Controller***
M4*30mm

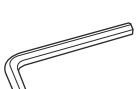

3mm Hex Key (x1)

For ***Frame Screws*** & ***Control Box Screws***

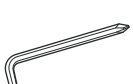

Double Head Hex Key (x1)

For ***Foot Screws*** & ***Desk Controller Screws***

User Manual (x1)

Assembly and Disassembly

Assembly Process

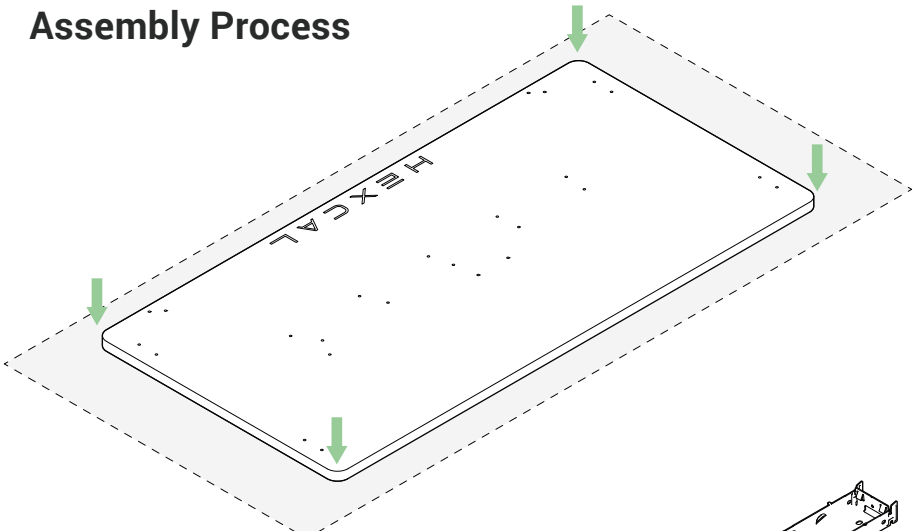

1 Place The Desktop.

Place the ***Desktop*** upside down on a blanket, or over its own packaging to protect it during the assembly. The side with pre-drilled pilot holes should be on top.

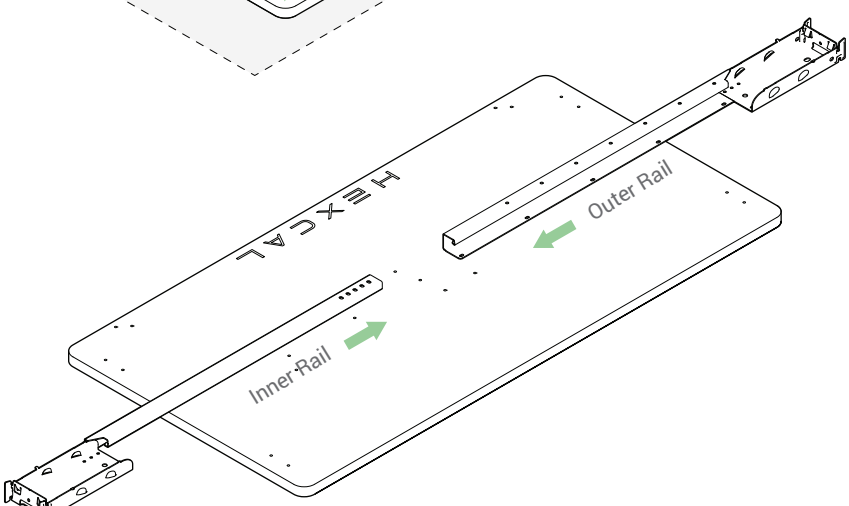

2 Install The Rails.

Place the ***Inner and Outer Rails*** on the ***Desktop*** and slide the ***Inner Rail*** into the ***Outer Rail***.

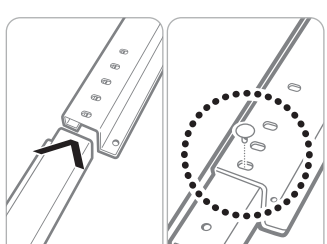

Line up the slots in the ***Rails*** with the pilot holes on the ***Desktop***.

Push the ***Rail Clip*** into the available hole. The hole that aligns will vary depending on your ***Desktop*** size.

Assembly Process

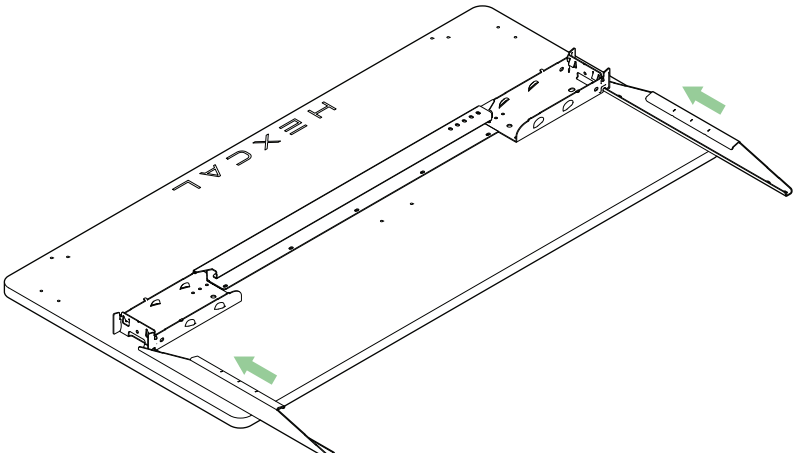

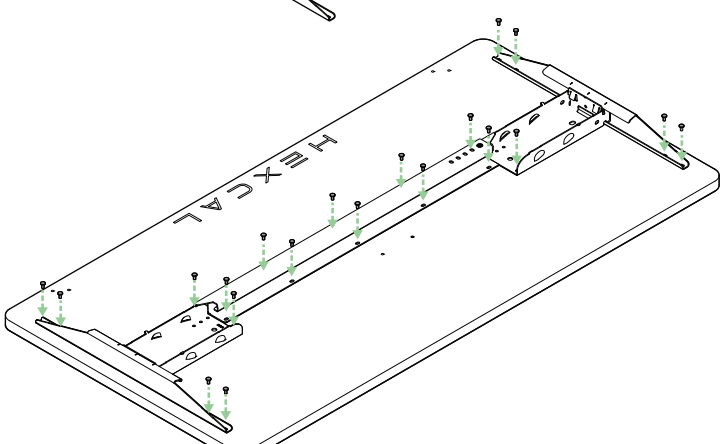

3 Install The Cantilevers.

Slide the ***Cantilever*** over the ***Outer Rail*** tabs and align the middle marker on the ***Cantilever*** with the center of the ***Rail***. Repeat this step on the other side.

The ***Desktop*** pilot holes will align with the slots in the ***Cantilevers***.

** It's normal that the **Cantilevers** remain loose at this step.*

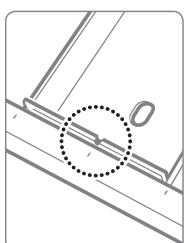

4 Secure The Frame To The Desktop.

Align the frame holes with the pilot holes in the ***Desktop***.

Screw the ***Cantilevers*** to the ***Desktop*** using (4) ***Frame Screws***. Repeat this step on the other side.

Screw the ***Rails*** into the ***Desktop*** using (12) ***Frame Screws***.

** Partially screw in all the **Frame Screws** before tightening fully. This will allow for minor adjustments to make sure all the frame holes remain aligned. There might be extra screws in the box, that is normal.*

Assembly Process

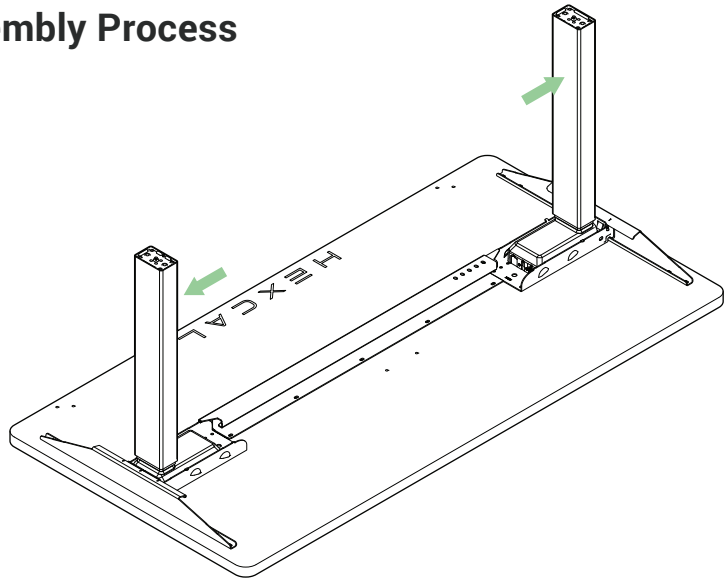

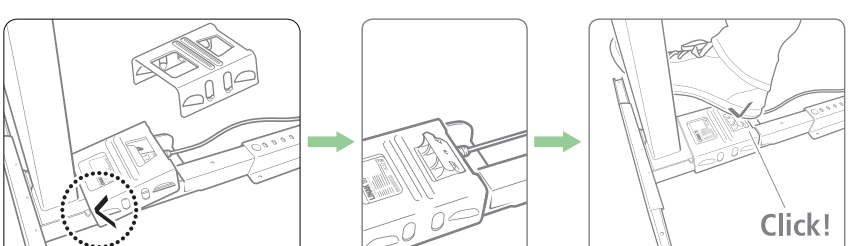

5 Install The Lifting Columns

Insert one ***Lifting Column*** inside the end of the ***Rail***. Slide the column backward into the base to make sure it's properly inserted.

Repeat this step for the other ***Column***.

** The **Columns** are identical and can be interchangeable from one side to another.*

** The Kick & Click™ frame system used in this product is provided by Linak®, an industry leading company in actuation solutions. You can also watch the Assembly video by scanning the QR code.*

Place one ***Clamp*** over the base of one ***Lifting Column***, press it down until it snaps into place and repeat this step on the other side.

Place the ***Kick Lock*** in the ***Clamp***. The arrow on the ***Kick Lock*** must face the arrow on the ***Clamp***. Repeat this step on the other side.

Fix the ***Kick Lock*** in the ***Clamp*** with your foot. This step requires a firm push to lock the system in place. Use the heel of your foot and don't be afraid to put your weight into the pressing down motion. You will hear a loud clicking sound once it's securely locked. Repeat this step on the other side.

Warning: We recommend putting on a shoe to kick the clamp. It can be dangerous if you don't follow the steps on the instructions and assembly video.

Assembly Process

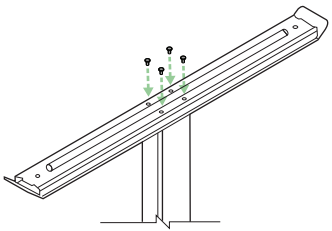

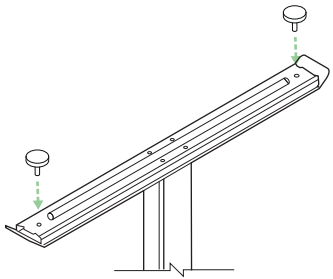

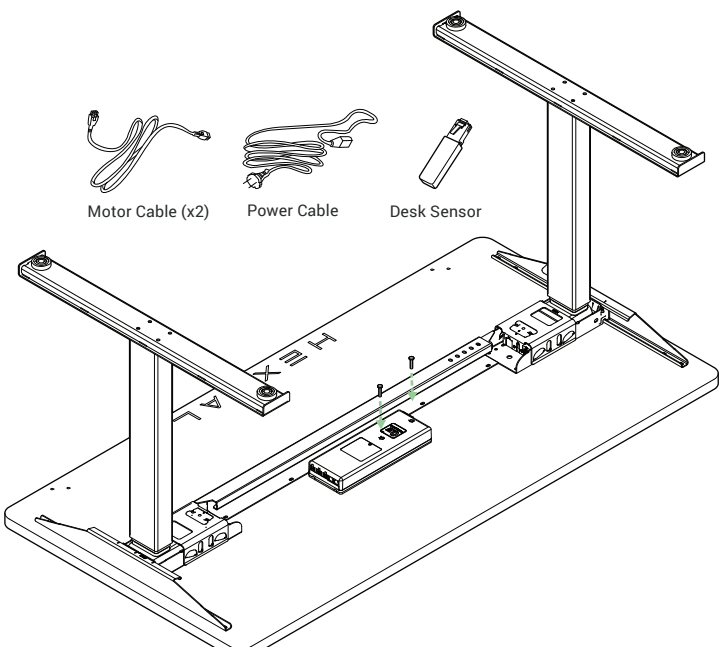

6 Install The Desk Feet.

Attach one ***Foot*** to one ***Lifting Column*** using (4) ***Foot Screw***. Repeat this step for the second feet.

Screw the (4) ***Levelers for Foot*** into the bottom of the ***Feet*** .

The **Feet are identical and can be interchangeable from one column to another.*

7 Electronics Assembly

Align the ***Control Box*** in the middle of the ***Desktop*** using the pre-drilled holes and attach it using ***Control Box Screws***.

Connect the ***Power Cable***, the ***Motor Cables***, and the ***Desk Sensor*** to the ***Control Box***.

* Install the ***Control Box*** so that the ***Power Cable*** is aligned with your nearest power outlet.

The **Desk Sensor is an Anti-Collision solution which can limit material damage to a desk or an object if a collision occurs during driving of the desk. It detects even a slight tilting of the desk when the desk is driving up or down. Upon detected tilting, the system stops and drives in the opposite direction to avoid collision and damage to the desk or the object. The **Desk Sensor** can detect both hard and soft obstacles.*

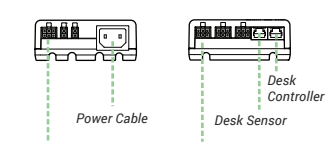

Assembly Process

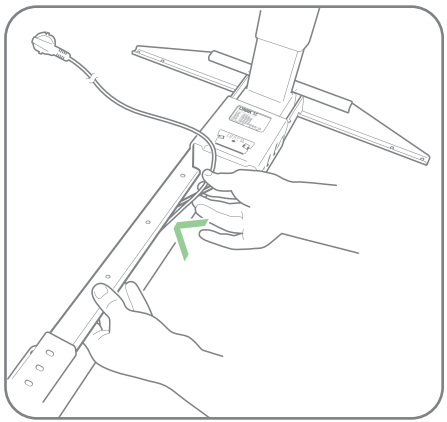

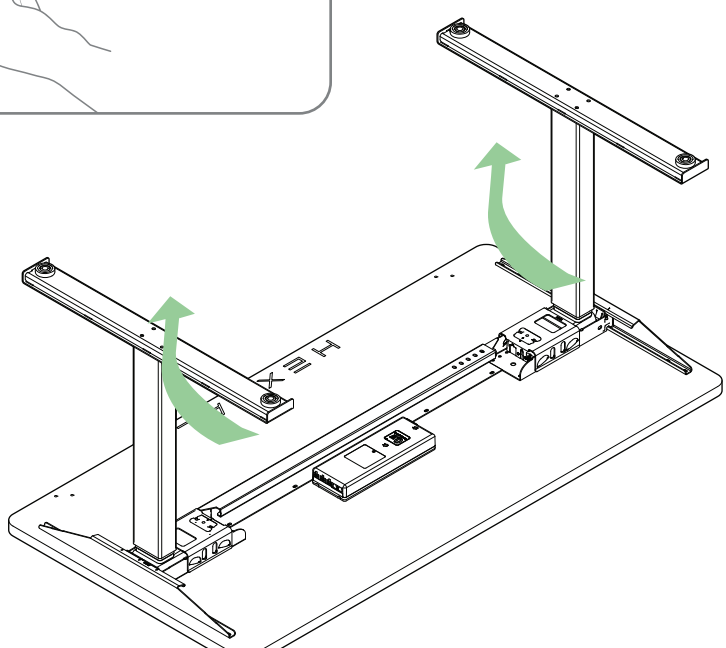

8 Cable Management

The ***Rails*** are designed to hide the loose cables of the ***Lifting Columns*** and the ***Control Box***. Insert them in the ***Rails*** as shown in the image.

** More cable management accessories and tools can be purchased on www.hexcal.com*

9 Flip the Desk Over

Warning: Do not flip the desk by yourself. It's a two-person job to avoid injuries and damage to the product.

Adjust ***Levelers*** if necessary in order to level your desk. Unscrew to increase height, screw to decrease height.

Assembly Process

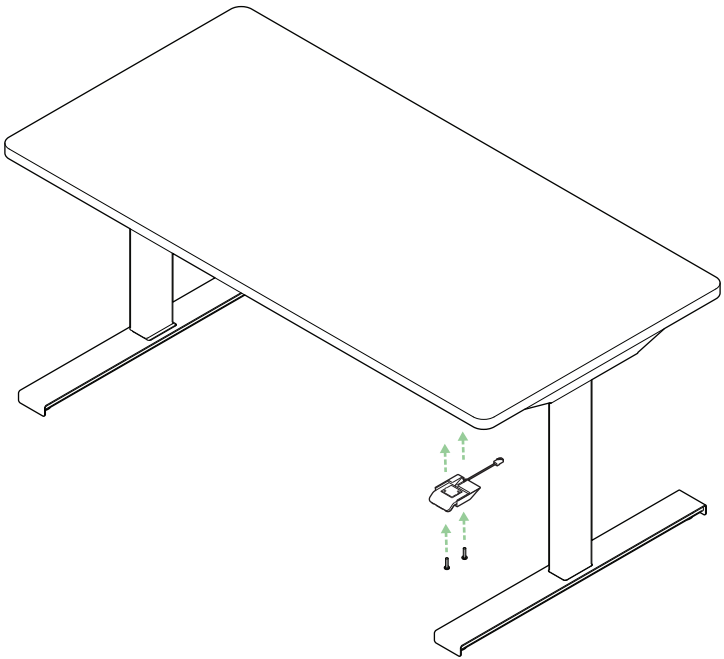

10 Install the Desk Controller

Use (2) ***Desk Controller Screws*** to attach the ***Desk Controller*** on either the left or right side of the ***Desktop***. The pilot holes are pre-drilled.

Connect the ***Desk Controller*** to the ***Control Box,*** shown on **P8.**

Review the Controller Guide on **P.13** to learn more about how to use the Award-winning ***Desk Controller***.

** You can choose to install the **Desk Controller** on either side depending on your preference.*

Disassembly Process

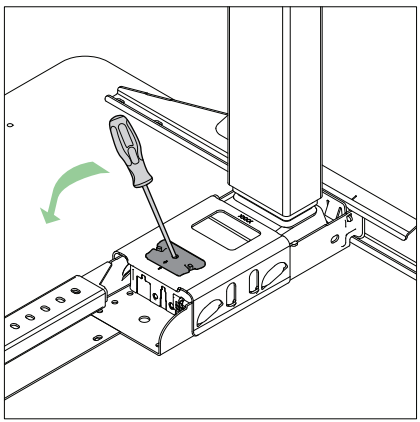

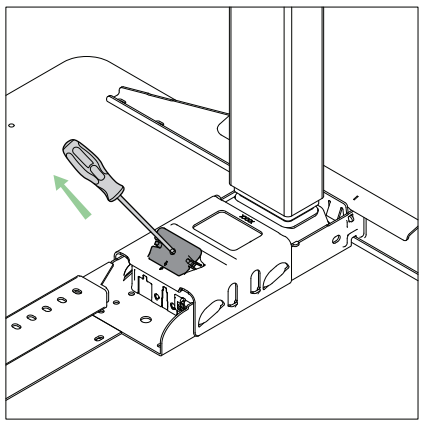

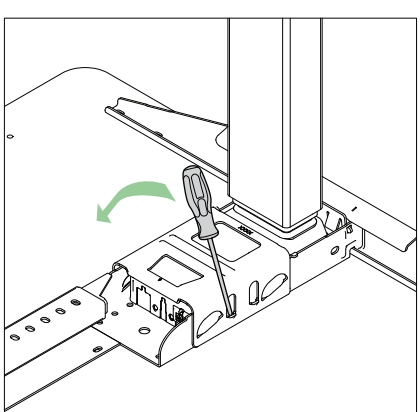

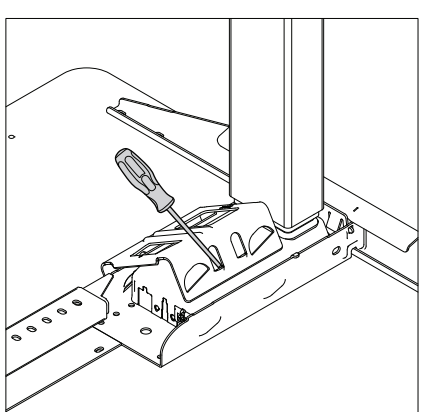

1 Lock Removal

Insert a screwdriver into the hole in the ***Kick Lock*** and move it towards the center of the desk to lift it out.

Warning: It is not recommended to disassemble and reassemble your desk repeatedly. If necessary, you can disassemble the locks and clamps by following the procedure below. Failing to follow the steps can lead to danger.

** You can also watch the Disassembly video by scanning the QR code.*

2 Clamp Removal

Insert one or two slotted screwdrivers into the side slots of the ***Clamp*** and lift it off the ***Rails***.

** This may deform the **Clamp** part slightly. If so, it must be formed back to its original state before reassembly. If you have any questions about your Hexcal products, visit hexcal.com and contact us by sending an email to our customer service team.*

Web Support : hexcal.com/support
Email Support : support@hexcal.com

Desk Controller Guide

Desk Controller Guide

The ***Desk Controller*** has three operation buttons.

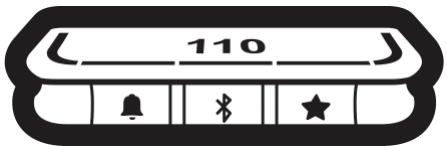

Desk Controller *operation buttons*

Each button has a specific function:

Symbol	Description	Function
🔔	Reminder	Setting reminders
ᛒ	Bluetooth®	Connecting the Desk Control™ App via Bluetooth® wireless technology
★	Favourite	Saving favourite positions

Display

The ***Desk Controller*** has an OLED display, which shows the height during drive of the desk and many other texts to guide the users.

Adjusting the displayed height of the desk

If the height shown in the display is not correct, it can be adjusted.

1. Press 🔔 and ᛒ buttons on the ***Desk Controller*** at the same time for five seconds and the height in the display starts to flash.
2. Tilt the ***Desk Controller*** to change the displayed height without moving the desk. Tilt up to increase the displayed height, tilt down to decrease the displayed height.
3. Press any button to confirm the height or wait for 10 seconds for automatic confirmation.

Changing the measurement unit

The measurement unit shown in the display can be set to either cm or inch.

1. Press ★ and ᛒ buttons on ***Desk Controller*** at the same time for five seconds and the current measurement unit flashes in display.
2. When e.g. “CM” flashes in display, tilt ***Desk Controller*** once to change measurement unit to inch. “INCH” now flashes in display.
3. Press any button to confirm measurement unit or wait for 10 seconds for automatic confirmation.

Desk Controller Guide

Operate the desk panel by tilting it.

1. Tilt and hold up ***Desk Controller*** to drive desk up, press and hold down ***Desk Controller*** to drive desk down.
2. Release ***Desk Controller*** when you have reached your desired position.

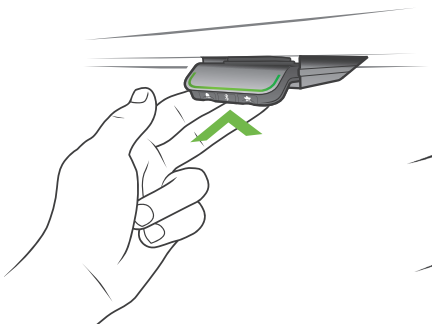

*Tilt and hold the **Desk Controller** to drive the desk up*

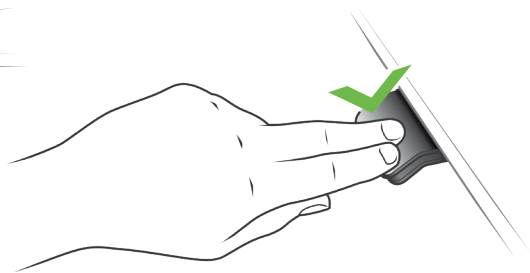

*Press and hold the **Desk Controller** to drive the desk down*

Desk height limits

In case the desk cannot be operated in its entire span (e.g. a shelf is blocking the upwards movement or a filing cabinet is placed under the desk and blocking the downwards movement), it is possible to set an upper limit and a lower limit for the desk height.

Note:

It must always be possible to drive the desk to its minimum height in case initialisation is required.

During initialisation items placed under the desk must be removed.

Setting upper limit

1. Adjust desk to maximum allowable height.
2. Press ✱ and tilt ***Desk Controller*** up at the same time for 8 seconds until light flashes.
3. Release ✱ and ***Desk Controller***.

Setting lower limit

1. Adjust desk to minimum allowable height.
2. Press ✱ and press ***Desk Controller*** down at the same time for 8 seconds until light flashes.
3. Release ✱ and ***Desk Controller***.

Desk Controller Guide

Favourite positions

Saving favourite positions 1 and 2

1. Adjust desk to a preferred position.
2. Press ★ button for two seconds.

Saving favourite positions

The light strip flashes white two times to indicate that saving the position is in progress. The position is not saved until the light strip becomes a static white. The display indicates the saved position with a ★ and a position number. The number next to the ★ indicates the order in which the positions are saved.

- First position saved: “1” is displayed next to the ★ .
- Second position saved: “2” is displayed next to the ★ .

Desk Controller Guide

If the user adjusts the desk to another position and saves this position, it will overwrite the favourite position (1 or 2) closest to the current position.

Saving favourite positions 3 and 4

1. Press ★ button shortly to make display toggle through the four favourite positions (with position ★ number next to it).
2. Toggle through these four favourite positions in display and choose which one to save current position as.

E.g. a user wants to save the current position as favourite position 3:

3. Press the ★ button and toggle to the ★ with “3” next to it.
4. Press ★ button for two seconds and favourite position is saved.

Driving to favourite positions

After saving the favourite positions, the user can reach the positions simply by tilting/pressing the ***Desk Controller***.

1. Tilt/press and hold - when a saved position has been reached, the desk stops.
2. Release ***Desk Controller*** within one second.

This way the user can easily change between sitting and standing height without looking at the ***Desk Controller*** in the meantime. During desk driving, the display will show the height of the desk. When a favourite position has been reached, the display shows a ★ and the position number.

The ***Desk Controller*** stops at all saved favourite positions, which means up to four different positions during the stroke length of the desk.

When the desk stops at a favourite position, the user can

• keep tilting/presssing the ***Desk Controller*** for more than one second

or

• release the ***Desk Controller*** and immediately tilt/press it again.

The desk will move past the favourite position and continue its movement.

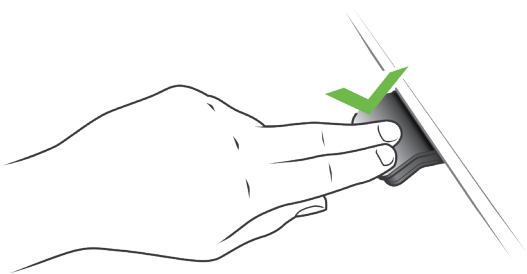

Tilt/press to drive desk

Desk Controller Guide

Automatic driving to favourite positions

(only possible for “Full version” with “Automatic drive” enabled in the Desk Control™ App)

1. Double-tap ***Desk Controller*** to let desk adjust automatically to first position in direction of double-tap.
2. To stop driving of desk between two favourite positions, simply tap ***Desk Controller*** once.

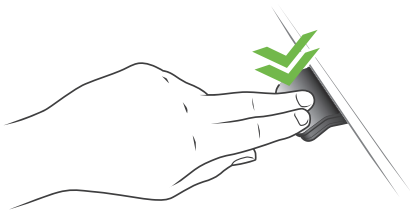

Double-tap to automatically adjust the desk to a favourite position

Erasing favourite positions

1. Press the ★ button for eight seconds to erase all saved favourite positions.

After five seconds, the display shows a countdown, and the light strip flashes red when all the favourite positions are erased.

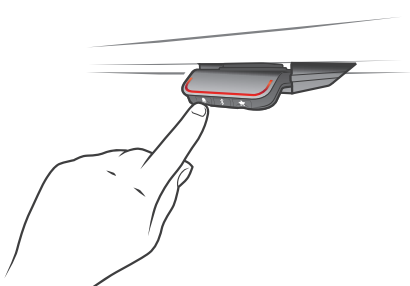

Erase favourite positions

Desk Controller Guide

Bluetooth®

Connecting Bluetooth®

1. The apps are called “Desk Control™” and they have the following app logo in iTunes and Apple App store, Google Play store, and Microsoft Store:

2. Press ᛒ button in the middle for two seconds to enable pairing mode.

The display on the ***Desk Controller*** will inform about the Bluetooth® ID of the desk, which is “*DESK*” followed by a four digit number – look for this ID in the list of “*Desks nearby*” in the Desk Control™ App.

The light strip flashes blue while the desk panel is in pairing mode.

Connect Bluetooth®

Desk Controller Guide

Reminder

The reminder LED lights through the surface of the ***Desk Controller***. The light is intended to indicate the position of the desk (sitting or standing height). The indication depends on the reminder interval chosen.

Heartbeat (light strip)

The heartbeat reminder is shown as a thin LED light strip. While the user is sitting for an appropriate amount of time according to the set interval, the light strip calmly pulsates green symbolising a heartbeat. When the sitting interval runs out, the calm pulsating green turns into fast pulsating orange for one minute hereafter into static orange to indicate that the user should adjust the desk to standing height. In standing height, the light strip pulsates green until a potential timeout (standard timeout is four hours). When the desk is adjusted back to sitting height, the light strip pulsates green until the reminder goes off again.

Reminder restart

The reminder automatically restarts when the desk is adjusted to sitting height.

Reminder timeout

After four hours without any action, the light strip will time out. When the ***Desk Controller*** is tilted, the green light turns back on.
When the light (strip or blocks) is enabled for reminders, the ***Desk Controller*** is no longer in ZERO™ mode as long as the light is on/active.

Desk Controller Guide

Reminder intervals

The number of white blocks (one, two or three) each representing an interval. The three standard intervals are:
- Interval 1: Reminder after 55 minutes sitting
- Interval 2: Reminder after 50 minutes sitting
- Interval 3: Reminder after 45 minutes sitting

The default interval is reminding after 55 minutes, which means one white block lights up.

Adjusting the reminder interval

1. Press 🔔 button to adjust interval of getting reminded to change position.
2. Toggle through intervals by pressing 🔔 button.
3. Release 🔔 button when desired interval is indicated.

When no white blocks are lit up, the reminder is turned off.

Through the app, it is possible to personalise the three intervals to custom values.

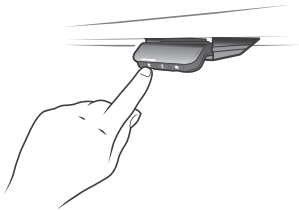

Interval 1: Reminder after 55 minutes sitting

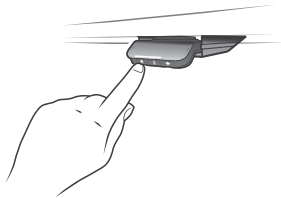

Interval 2: Reminder after 50 minutes sitting

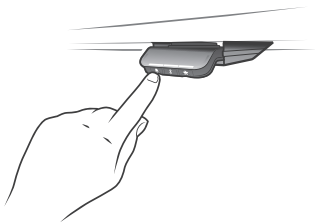

Interval 3: Reminder after 45 minutes sitting

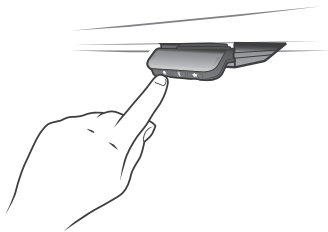

Reminder off

Set the reminder

Desk Controller Guide

Resetting the reminder

1. Press 🔔 symbol for eight seconds to reset reminder to default values.
After five seconds the display shows a countdown and the light strip flashes red when the reminder is reset.

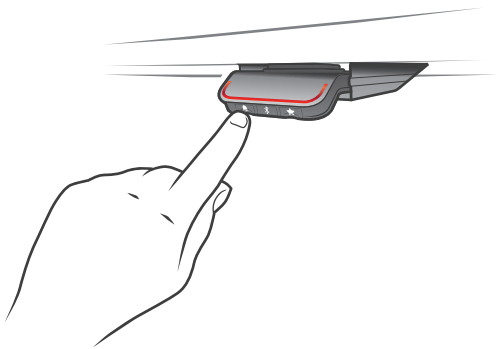

Reset reminder

Key lock

The operation of ***Desk Controller*** can be locked to prevent unintended driving of the desk. As default the key lock is disabled. If enabled, it automatically locks the ***Desk Controller*** after a configured amount of time. The key lock function can also be configured to indicate attempt to operate the locked ***Desk Controller*** by showing a red light and a 🔒 .

Unlocking *Desk Controller*

1. Press 🔔 , ᛒ and ★ in sequence (max. one second between each button press).

Desk Controller Guide

Troubleshooting/FAQs

Error codes

The ***Desk Controller*** shows error codes generated in the CBD6S in case of errors in the system. The most common errors loop between the error code (EXX) and the error text, check the codes below:

Error codes	Cause
E53-E64	COLLISION
E41-E52	OVERLOAD
E01	INITIALISATION

Factory reset

Press and hold the 🔔 and ★ buttons for eight seconds to set the ***Desk Controller*** to factory default. The LED/light strip flashes red three times to indicate the reset is done. If a factory reset is performed, it sets the ***Desk Controller*** back to the configured state, i.e. all configurations made in the ***Desk Controller*** configurator will not be reset – only the settings changed directly on the ***Desk Controller*** or in the app by the end users will be reset.

During reset, the display lights up after five seconds, showing an arrow with a countdown [seconds] and RESET

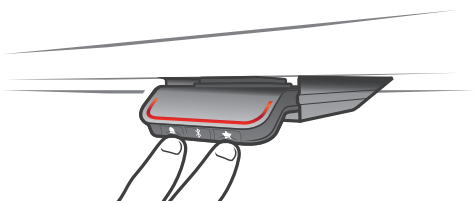

Reset to factory default

Appendix: Troubleshooting

Troubleshooting

Standard troubleshooting procedures

Procedure 1 (P1) - Initialise the *Control Box* (reset)

This procedure resets all ***Columns*** to the fully retracted position so that the ***Control Box*** knows where they are.
Note: This is the common solution for when a desk will move down but not up.
When a ***Control Box*** requires initialisation, this is how the system is programmed to behave.

1. Hold DOWN button on ***Desk Controller*** to ensure the ***Columns*** are retracted to their lower limit (whether it is the fully retracted hard stop or a configured lower limit).
2. Briefly release DOWN.

3.1 Press and hold DOWN for 5 seconds, wait until all desk movement has stopped, then release.
3.2 If initialisation is successful, columns will do a slight up/down “handshake” movement.
3.3 If you have a ***Desk Controller*** with display, E01 is displayed during this part of the procedure.

Procedure 2 (P2) - Check all cable connections

1. ***Power Cable***, connected to both the ***Control Box*** and power outlet.
2. All ***Motor Cables***, connected to both the ***Control Box*** and ***Columns***.

2.1 Assuming a standard ***Control Box*** configuration, these must be connected in channels 1 and 2, or channels 1, 2 and 3 for a 3-legged table.
They cannot be connected in channels 1 and 3 or 2 and 3 unless there is a configuration on the ***Control Box*** specifying this arrangement.

3. ***Desk Controller*** cable, connected to the ***Control Box*** in either port A1 or port A2.

Procedure 3 (P3) - Check for obstructions

1. Check under, above and on the sides of the desk for any obstructions that could prevent movement in either direction.

Procedures 4 and 5 are for a two-legged desk system. The same concepts can be used for a 3-legged system using Channel 3 and so forth.

Procedure 4 (P4) - Check for faulty component(s) WITH error codes

(digital display on desk panel, or on app via Bluetooth®)
Notes: Check the Error codes list for assistance. The code should read E##. Some error codes are channel-specific, which can help pinpoint the problem.

Troubleshooting

Standard troubleshooting procedures

Symptom	Remedy
System will move down but not up.	1. Initialise (see Procedure 1 (P1)).
System unresponsive (no power to display when any button is pressed). If any of these steps activate the digital display, initialise the system (see Procedure 1 (P1)).	1. Check ***Power Cable*** connection. 2. Test power outlet using another device (lamp, phone charger, etc.). 3. Plug in a new switch and test. 4. Connect all existing cables to a new ***Control Box*** and test.
System is powered, but will not initialise.	1. Try pressing and releasing the DOWN button a few times before pressing and holding for 5 seconds. 2. Also, be aware of whether the ***Control Box*** has a special configuration: If the desk is programmed with a lower stroke limit, so as to avoid a collision with something like a file cabinet, it is possible that it also has a custom, longer Forced Initialisation Time. This is the time required to hold DOWN before initialisation begins. Sometimes this is 10 seconds or longer. 3. If you have a standard ***Control Box*** without a special configuration (i.e. with standard configuration), try to initialise each column in Channel 1 by itself, with nothing else plugged into the motor channels on the ***Control Box***. Also, swap the motor cables so that a different motor cable is used to initialise Channel 1 by itself. The problem could be a faulty column or a faulty motor cable.
Channel-specific error E.g. E41 – Channel 1 overload (Everything except PIEZO errors E59-E63)	1. Swap the ***Motor Cable*** connections at the ***Control Box*** (***Motor Cable*** #1 from channel 1 to 2, ***Motor Cable*** #2 from channel 2 to 1). If it remains E41, there could be a problem with the application (load or obstruction on one side) or a defective ***Control Box***. If the error changes to E42, go to step 2. 2. Swap the ***Motor Cable*** connections at the ***Columns***, so that the ***Column*** that was originally connected to Channel 1 is back in Channel 1, but with the ***Motor Cable*** that was originally connected to Channel 2. If it remains E42, it is most likely a defective ***Motor Cable***, now connected to Channel 2. If it goes back to E41, it is most likely a defective column, now connected to Channel 1.
Desk is uneven 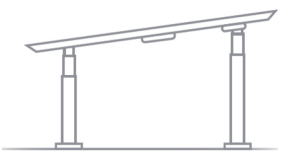	1. Initialise the desk. If both ***Columns*** begin to run down, complete the initialisation. If only one column moves, stop and go to Step 2. 2. Check ***Motor Cable*** connections. Check to ensure ***Motor Cables*** are not pulled during movement. With a standard ***Control Box***, it is possible that only one ***Column*** is connected, and connected to Channel 1. In this case, it will initialise and run Channel 1 only. If there is only one ***Column*** but it is connected to Channel 2, it will not initialise. 3. If a ***Motor Cable*** was disconnected, reconnect the cable and try initialising again. 4. If unsuccessful, connect the ***Column*** from Channel 2 into Channel 1, with nothing in Channel 2, and initialise. 5. Try initialising the same ***Column*** that is in Channel 1, but with a different ***Motor Cable*** . If it still will not initialise, replace the ***Column***.

Troubleshooting

Standard troubleshooting procedures

Procedure 5 (P5) - Check for faulty component(s) WITHOUT error codes

(no digital display on desk panel, no Bluetooth®)

Symptom	Remedy
System will move down but not up.	1. Initialise (see Procedure 1 (P1)).
System unresponsive (no power to display when any button is pressed). If any of these steps activate the digital display, initialise the system (see Procedure 1 (P1)).	1. Check ***Power Cable*** connection. 2. Test power outlet using another device (lamp, phone charger, etc.). 3. Plug in a new switch and test. 4. Connect all existing cables to a new ***Control Box*** and test. 5. Try pressing and releasing the DOWN button a few times before pressing and holding for 5 seconds. 6. Also, be aware of whether the ***Control Box*** has a special configuration: If the desk is programmed with a lower stroke limit, so as to avoid a collision with something like a file cabinet, it is possible that it also has a custom, longer Forced Initialisation Time. This is the time required to hold DOWN before initialisation begins. Sometimes this will take 10 seconds or longer. 7. If you have a standard ***Control Box*** without a special configuration (i.e. with standard configuration), try to initialise each ***Column*** in Channel 1 by itself, with nothing else plugged into the motor channels on the ***Control Box***. Also, swap the ***Motor Cables*** so that a different ***Motor Cable*** is used to initialise Channel 1 by itself. The problem could be a faulty ***Column*** or a faulty ***Motor Cable***.
Desk is uneven	See “Desk is uneven” (Procedure 4 (P4))..

Troubleshooting

Error codes

Error Code	Name	Description	Potential cause	Remedy
E01	Position Lost	The desk has an unknown position and needs to be initialised	• Position error • New ***Column*** added	- Initialise the system (P1)
E02	General Overload Up	Overload in upward direction has occurred	• Obstruction • Defective ***Column*** or ***Motor Cable***	- Check all cable connections, (P2) initialise the system (P1) - Troubleshoot components by initialising 1 at a time (only possible with standard configuration) (P4)
E03	General Overload Down	Overload in downward direction has occurred	• Obstruction • Defective ***Column*** or ***Motor Cable***	- Check all cable connections, (P2) initialise the system (P1) - Troubleshoot components by initialising 1 at a time (only possible with standard configuration) (P4)
E08	Watchdog	Indicate that software failed to kickstart watchdog	• Program fault	- Unplug ***Power Cable*** for 15 seconds - Initialise the system (P1) - Replace ***Control Box***
E09	LIN collision	Collisions detected on the LIN bus	• Key pressed on two or more connected ***Desk Controllers*** simultaneously • Multiple LIN bus devices activated	- Check if another ***Desk Controller*** is connected and being activated - Unplug all but one ***Desk Controller*** and test system
E10	Power fail	Power fail happened, or power regulator adjusted below 10%	• ***Power Cable*** pulled during driving • Internal fault • Only 1 battery for a 3- or 4-channel system • "E10 is a power fail, voltage on power supply drops below a certain limit, power removed"	- Check ***Power Cable*** is not caught, and is allowed to freely travel - Use strain-relief loop built into ***Control Box*** - Use a 2nd battery; charge batteries
E11	Channel mismatch	Change in number of actuators since initialisation	• Disconnection • ***Column*** added	- Check ***Motor Cable*** connections and Integrity (P2) - Replace ***Motor Cable*** or ***Column*** - Initialise the system (P1)
E12	Position error	Once channel has a different position to the others	• Too much back-drive occurred	- Move table to fully retracted position - Initialise system (P1)
E13	Short circuit	Short circuit detected during operation	• Squeezed ***Motor Cable*** • Short in motor	- Check ***Motor Cable*** connections (P2) - Isolate and replace ***Motor Cable*** (P4) - Isolate and replace ***Column*** (P4)
E15	Power limit	System has reached its power limitation	• ***Power Cable*** pulled during driving • Internal fault This is frequently seen alongside E10. E15 is when power regulator has adjusted speed down on actuators without any significant current draw, usually caused by power supply dropping.	- Check ***Power Cable*** is not caught, and is allowed to freely travel - Use strain-relief loop built into ***Control Box***

Troubleshooting

Standard troubleshooting procedures

Error Code	Name	Description	Potential cause	Remedy
E16	Key Error	Illegal keys pressed (handled internally in ***Desk Controller***)	• Hitting multiple buttons simultaneously	- Check ***Desk Controller***
E17	Safety missing	LIN bus unit does not support safety feature	• ***Desk Controller*** does not have up-todate software	- Try ***Desk Controller*** with more recent software version (printed on label)
E18	Missing Initialisation plug	A special service tool is required to change number of channels to the system	[BASELIFT Only] • Service tool missing from BASELIFT system when initialising	Add service tool
E23	Ch1 missing	Channel 1 is detected missing	• Disconnection • Faulty ***Motor Cable*** • Faulty motor in ***Column***	- Check ***Motor Cable*** connections and Integrity (P2) - Replace ***Motor Cable*** or ***Column*** - Initialise the system (P1)
E24	Ch2 missing	Channel 2 is detected missing	• Disconnection • Faulty ***Motor Cable*** • Faulty motor in ***Column***	- Check ***Motor Cable*** connections and Integrity (P2) - Replace ***Motor Cable*** or ***Column*** - Initialise the system (P1)
E25	Ch3 missing	Channel 3 is detected missing	• Disconnection • Faulty ***Motor Cable*** • Faulty motor in ***Column***	- Check ***Motor Cable*** connections and Integrity (P2) - Replace ***Motor Cable*** or ***Column*** - Initialise the system (P1)
E26	Ch4 missing	Channel 4 is detected missing	• Disconnection • Faulty ***Motor Cable*** • Faulty motor in ***Column***	- Check ***Motor Cable*** connections and Integrity (P2) - Replace ***Motor Cable*** or ***Column*** - Initialise the system (P1)
E29	Ch1 type	Channel 1 is not same type as when initialised	• Change in ***Column*** type • Loose wire inside motor	- Check ***Column*** type - Replace ***Column*** - Initialise the system (P1)
E30	Ch2 type	Channel 2 is not same type as when initialised or not same type as channel 1	• Change in ***Column*** type • Loose wire inside motor	- Check ***Column*** type - Replace ***Column*** - Initialise the system (P1)
E31	Ch3 type	Channel 3 is not same type as when initialised or not same type as channel 1	• Change in ***Column*** type • Loose wire inside motor	- Check ***Column*** type - Replace ***Column*** - Initialise the system (P1)
E32	Ch4 type	Channel 4 is not same type as when initialised or not same type as channel 1	• Change in ***Column*** type • Loose wire inside motor	- Check ***Column*** type - Replace ***Column*** - Initialise the system (P1)
E35	Ch1 pulse fail	Channel 1 had to many pulse errors	• Loose/faulty cable • Hall sensor PCB	- Check ***Motor Cable*** connections and integrity (P2) - Replace ***Column*** - Initialise the system (P1)
E36	Ch2 pulse fail	Channel 2 had to many pulse errors	• Loose/faulty cable • Hall sensor PCB	- Check ***Motor Cable*** connections and integrity (P2) - Replace ***Column*** - Initialise the system (P1)

Troubleshooting

Standard troubleshooting procedures

Error Code	Name	Description	Potential cause	Remedy
E37	Ch3 pulse fail	Channel 3 had to many pulse errors	• Loose/faulty cable • Hall sensor PCB	- Check ***Motor Cable*** connections and integrity (P2) - Replace ***Column*** - Initialise the system (P1)
E38	Ch4 pulse fail	Channel 4 had to many pulse errors	• Loose/faulty cable • Hall sensor PCB	- Check ***Motor Cable*** connections and integrity (P2) - Replace ***Column*** - Initialise the system (P1)
E41	Ch1 overload up	Overload up occurred on channel 1	• ***Column*** is overloaded • Hit obstruction • Reached end stop (before initialisation at upper end stop occurs)	- Remove load - Remove obstruction (P3) - Initialise if necessary (P1)
E42	Ch2 overload up	Overload up occurred on channel 2	• ***Column*** is overloaded • Hit obstruction • Reached end stop (before initialisation at upper end stop occurs)	- Remove load - Remove obstruction (P3) - Initialise if necessary (P1)
E43	Ch3 overload up	Overload up occurred on channel 3	• ***Column*** is overloaded • Hit obstruction • Reached end stop (before initialisation at upper end stop occurs)	- Remove load - Remove obstruction (P3) - Initialise if necessary (P1)
E44	Ch4 overload up	Overload up occurred on channel 4	• ***Column*** is overloaded • Hit obstruction • Reached end stop (before initialisation at upper end stop occurs)	- Remove load - Remove obstruction (P3) - Initialise if necessary (P1)
E47	Ch1 overload down	Overload down occurred on channel 1	• Hit obstruction	- Remove obstruction (P3) - Initialise if necessary (P1)
E48	Ch2 overload down	Overload down occurred on channel 2	• Hit obstruction	- Remove obstruction (P3) - Initialise if necessary (P1)
E49	Ch3 overload down	Overload down occurred on channel 3	• Hit obstruction	- Remove obstruction (P3) - Initialise if necessary (P1)
E50	Ch4 overload down	Overload down occurred on channel 4	• Hit obstruction	- Remove obstruction (P3) - Initialise if necessary (P1)
E53	Ch1 anti-col	Anti-collision triggered on channel 1	• Hit obstruction	- Remove obstruction (P3) - Initialise if necessary (P1)
E54	Ch2 anti-col	Anti-collision triggered on channel 2	• Hit obstruction	- Remove obstruction (P3) - Initialise if necessary (P1)
E55	Ch3 anti-col	Anti-collision triggered on channel 3	• Hit obstruction	- Remove obstruction (P3) - Initialise if necessary (P1)

Troubleshooting

Standard troubleshooting procedures

Error Code	Name	Description	Potential cause	Remedy
E56	Ch4 anti-col	Anti-collision triggered on channel 4	• Hit obstruction	- Remove obstruction (P3) - Initialise if necessary (P1)
E59	Ch1 SLS/ PIEZO	Safety limit switch activated on channel 1	• Hit obstruction	- Remove obstruction (P3) - Initialise if necessary (P1)
E60	Ch2 SLS/ PIEZO	Safety limit switch activated on channel 2	• Hit obstruction	- Remove obstruction (P3) - Initialise if necessary (P1)
E61	Ch3 SLS/ PIEZO	Safety limit switch activated on channel 3	• Hit obstruction	- Remove obstruction (P3) - Initialise if necessary (P1)
E62	Ch4 SLS/ PIEZO	Safety limit switch activated on channel 4	• Hit obstruction	- Remove obstruction (P3) - Initialise if necessary (P1)
E65	Ch1 pulse dir	Pulses counted wrong direction in channel 1	• Motor poles are crossed • Hall sensor cables are crossed	- Check ***Motor Cable*** connections and integrity (P2) - Replace ***Column*** - Initialise the system (P1)
E66	Ch2 pulse dir	Pulses counted wrong direction in channel 2	• Motor poles are crossed • Hall sensor cables are crossed	- Check ***Motor Cable*** connections and integrity (P2) - Replace ***Column*** - Initialise the system (P1)
E67	Ch3 pulse dir	Pulses counted wrong direction in channel 3	• Motor poles are crossed • Hall sensor cables are crossed	- Check ***Motor Cable*** connections and integrity (P2) - Replace ***Column*** - Initialise the system (P1)
E68	Ch4 pulse dir	Pulses counted wrong direction in channel 4	• Motor poles are crossed • Hall sensor cables are crossed	- Check ***Motor Cable*** connections and integrity (P2) - Replace ***Column*** - Initialise the system (P1)
E71	Ch1A short	Short circuit on channel 1 [If T-splitter is used, short circuit on 1A]	• Damage to ***Motor Cable*** • Damage to cable exiting ***Column*** (if applicable)	- Inspect ***Motor Cable*** for damage, replace if damaged - Inspect cable exiting ***Column*** (if applicable), replace if damaged.
E72	Ch1B short	Short circuit on channel 1 [If T-splitter is used, short circuit on 1B]	• Damage to ***Motor Cable*** • Damage to cable exiting ***Column*** (if applicable)	- Inspect ***Motor Cable*** for damage, replace if damaged - Inspect cable exiting ***Column*** (if applicable), replace if damaged.
E73	Ch2A short	Short circuit on channel 1 [If T-splitter is used, short circuit on 2A]	• Damage to ***Motor Cable*** • Damage to cable exiting ***Column*** (if applicable)	- Inspect ***Motor Cable*** for damage, replace if damaged - Inspect cable exiting ***Column*** (if applicable), replace if damaged.
E74	Ch2B short	Short circuit on channel 1 [If T-splitter is used, short circuit on 2B]	• Damage to ***Motor Cable*** • Damage to cable exiting ***Column*** (if applicable)	- Inspect ***Motor Cable*** for damage, replace if damaged - Inspect cable exiting ***Column*** (if applicable), replace if damaged.

Troubleshooting

Standard troubleshooting procedures

Error Code	Name	Description	Potential cause	Remedy
E75	Ch3A short	Short circuit on channel 1 [If T-splitter is used, short circuit on 3A]	• Damage to ***Motor Cable*** • Damage to cable exiting ***Column*** (if applicable)	- Inspect ***Motor Cable*** for damage, replace if damaged - Inspect cable exiting ***Column*** (if applicable), replace if damaged.
E76	Ch3B short	Short circuit on channel 1 [If T-splitter is used, short circuit on 3B]	• Damage to ***Motor Cable*** • Damage to cable exiting ***Column*** (if applicable)	- Inspect ***Motor Cable*** for damage, replace if damaged - Inspect cable exiting ***Column*** (if applicable), replace if damaged.
E77	Ch4A short	Short circuit on channel 1 [If T-splitter is used, short circuit on 4A]	• Damage to ***Motor Cable*** • Damage to cable exiting ***Column*** (if applicable)	- Inspect ***Motor Cable*** for damage, replace if damaged - Inspect cable exiting ***Column*** (if applicable), replace if damaged.
E78	Ch4B short	Short circuit on channel 1 [If T-splitter is used, short circuit on 4B]	• Damage to ***Motor Cable*** • Damage to cable exiting ***Column*** (if applicable)	- Inspect ***Motor Cable*** for damage, replace if damaged - Inspect cable exiting ***Column*** (if applicable), replace if damaged.
E86	Master	Connection to master lost OR following messages are from master	[Only used in multiparallel system] • Poor cable connection to master box • If followed by another error code, then codes being communicated from master box	- Check connection to master box, check cable integrity - If communicating other error codes, see above
E87	Slave 1	Connection to 1st slave lost OR following messages are from 1st slave	[Only used in multiparallel system] • Poor cable connection to slave box • If followed by another error code, then codes being communicated from slave box	- Check connection to master box, check cable integrity - If communicating other error codes, see above
E88	Slave 2	Connection to 2nd slave lost OR following messages are from 2nd slave	[Only used in multiparallel system] • Poor cable connection to slave box • If followed by another error code, then codes being communicated from slave box	- Check connection to master box, check cable integrity - If communicating other error codes, see above
E89	Slave 3	Connection to 3rd slave lost OR following messages are from 3rd slave	[Only used in multiparallel system] • Poor cable connection to slave box • If followed by another error code, then codes being communicated from slave box	- Check connection to master box, check cable integrity - If communicating other error codes, see above
E93	Desk Sensor 1 – Activation	Detected trigger from LIN bus safety limit switch, e.g. DS1	• DS1 was triggered	- Remove any obstacles causing the desk drive to stop and adjust the height again
E94	Desk Sensor 1 – Not Responding	LIN SLS unit (e.g. DS1) no longer responding	• DS1 can no longer be detected	- Check that the DS1 is correctly mounted. - Remove the DS1 and reinsert it.

Perfect Your Workspace,
Perfect Your Work.