Global Flex Mfg.

Applications For Expansion Joints & Flexible Connectors

Global Flex Mfg.

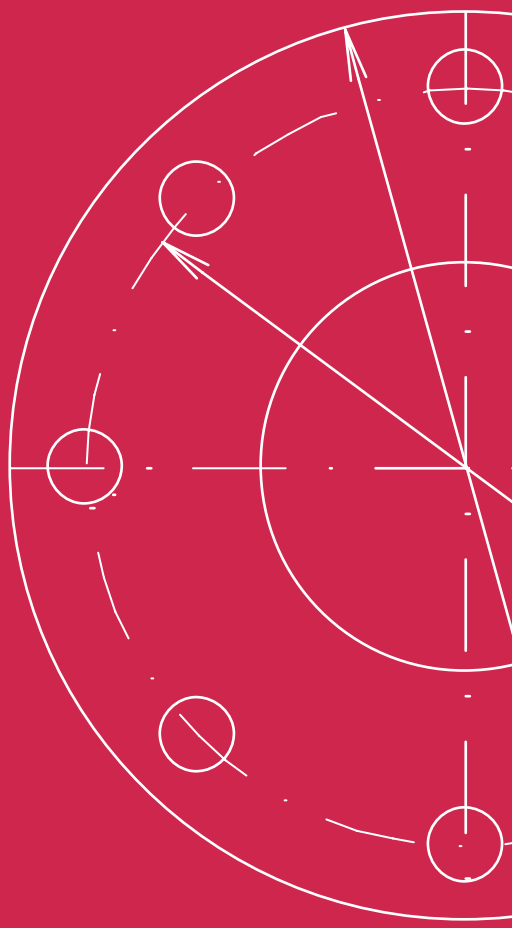

APPLICATIONS FOR EXPANSION JOINTS & FLEXIBLE CONNECTORS

A Practical Guide For Mechanical & Process Consulting Engineers.

Product Function, Selection, and Installation.

TABLE OF CONTENTS

Global Flex Mfg.

SECTION 1

WHY A SYSTEM MAY REQUIRE FLEXIBLE CONNECTORS OR EXPANSION JOINTS

Vibration & noise control
Compensation of thermal expansion
Accommodate offset due to Misalignment or equipment settling
To take up seismic movements

WHY A SYSTEM MAY REQUIRE FLEXIBLE CONNECTORS OR EXPANSION JOINTS

THE MAIN FUNCTION of expansion joints and flexible connectors is to ***absorb vibration and noise***, to ***compensate for thermal growth in the pipeline***, to ***accommodate offset due to misalignment or equipment settling***, and to ***act as standby flexible connectors in the event of seismic activity.***

Specialty consultants can provide a great deal of information on the effects of vibration and noise, complete pipe stress analysis, and provide guidelines or probable seismic activity, depending on the region or location. Seismic guidelines usually include recommended connector capabilities.

VIBRATION AND NOISE CONTROL

Very often, equipment such as pumps, chillers, and air handlers generate undesirable vibration and noise that can be transmitted and accentuated by the connecting piping system. Flexible connectors and expansion joints are capable of absorbing and/or isolating nearly all noise and vibration generated by adjacent mechanical equipment. These absorbing capabilities vary with the type of connector, the overall length of the connector, and operating conditions such as vibration frequency and noise. Care should always be taken to either choose flex connector products that either do not introduce pressure thrust forces into the system, or to design a system that contains the proper anchors or restraining devices on the flexible product.

COMPENSATION OF THERMAL EXPANSION

Thermal growth of piping due to temperature differentials must be accommodated to avoid damage to equipment or piping. Expansion joints, in combination with pipe alignment guides and pipe anchors can absorb large axial movements that are beyond the capabilities of pipe loops or changes of direction.

ACCOMMODATE OFFSET DUE TO MISALIGNMENT OR SETTLING

Pumps, compressors, fans, piping, and related equipment move out of alignment due to wear, load stresses, relaxation, and settling of supporting foundations. Flexible connectors compensate for lateral and angular movements, preventing damage and undue downtime of plant operations.

SEISMIC COMPENSATION

Flexible connectors can greatly assist in the protection of piping and equipment in the event of seismic activity. Special flexible connectors have been designed that will accommodate large movements in several different directions. Typically, these connectors are manufactured in the form of “V”, “L”, or “U” shaped joints incorporating metal braided members on each segment. As opposed to expansion joints, these connectors do not impose thrust loads on the system, due to the welded on metal braid over the convoluted hose sections. Materials can be carbon steel, stainless steel, or bronze/copper.
End configurations can be flanged, threaded, weld type, or copper sweat. (See Section 7.)

Global Flex Mfg.

SECTION 2

EXPANSION JOINT EFFECTS ON A PIPING SYSTEM

Anchor load calculations
The use of control units/thrust restraints
Proper expansion joint placement & guiding
Specifying proper installation and written installation instruments
Importance of expansion joint Inspections prior to hydro-test

EXPANSION JOINT EFFECTS ON A PIPING SYSTEM

PLACING A BELLOWS or arch type connector in a piping system results in conditions quite different than using straight spool pieces or braided metal connectors. The creation of ***pressure thrust*** results from installing a flexible unit, such as an expansion joint, into a rigid piping system which is under pressure. In cases of internal, or positive, pressure, the convolutions are pushed apart, causing the bellows to extend or increase in length while the opposite is observed in cases of external or negative pressure. The force required to maintain the bellows at its proper length is equal to this pressure thrust and can be significantly higher than all other system forces combined.

ANCHOR LOAD CALCULATIONS

Along with the normal pipe system forces, anchors in systems which contain expansion joints are subjected to additional forces. Pipe anchors, their attachments, and the structures to which they are attached, must be designed to withstand all of the forces acting upon them. Two significant forces which are unique to expansion joint systems are spring force and pressure thrust force.

The first component in anchor load calculations is ***spring forces***. Spring force is the force required to deflect an expansion joint a specified amount. Spring force imparts a resisting force throughout the system much as a spring would when compressed or otherwise deflected.

The magnitude of spring force is determined by the expansion joint's spring rate, and by the amount of movement to which the expansion joint is subjected. This rate varies for each expansion joint or connector and is bas ed on the physical construction of the product. Spring rates in lbs./inch are given for axial compression, axial elongation, and lateral deflection. In thermal growth compensation situations, we are primarily concerned with the compression spring rate.

Anchor Load Component #1 – Spring Force

Spring Force = Spring Rate/Inch x Amount of Movement Expected

The second component of anchor load calculations is ***pressure thrust force***. Pressure thrust force is a function of the system pressure and mean diameter of the bellows. Mean diameter is determined by the height, or span, of the bellows or arch and will vary slightly from product to product. The mean diameter is used to determine the effective area of the expansion joint so that pressure thrust force can be calculated. Often, the effective area of given products can be obtained from the manufacturer of the products. The illustration below shows the effect of pressure on a bellows or arch convolution.

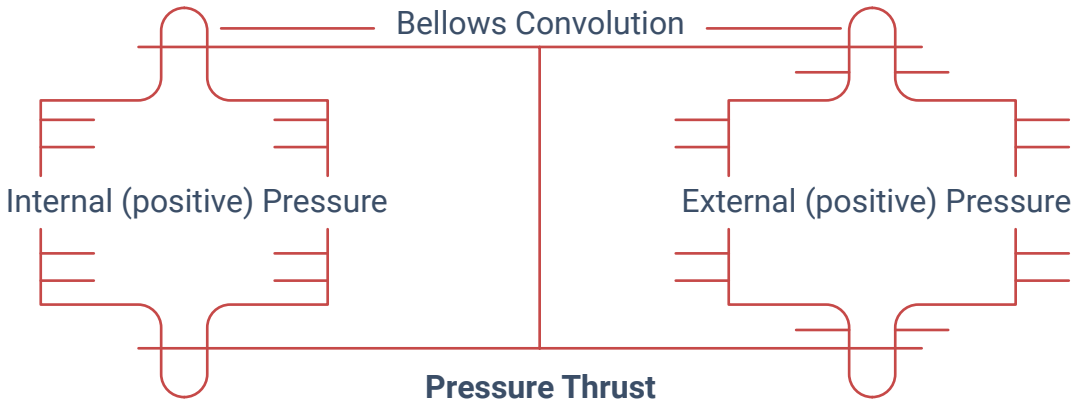

Anchor Load Component #2 – Pressure Thrust Force

*Effective Area = π * (Mean Diameter²)*

Pressure Thrust Force = System Pressure x Effective Area

The system pressure figure should be the highest pressure that the system will experience – typical hydrotest pressure. Be careful not to specify unrealistic safety factors which could lead to over-design of the anchors at additional cost. To stop the expansion joint from extending or compressing due to pressure thrust, main anchors must be located at some point on each side of the joint to withstand the forces of pressure thrust and keep the expansion joint at its proper length.

Main anchors must be designed to withstand the forces and moments imposed upon it by each of the pipe sections to which it is attached. These will consist of the full bellows thrust due to pressure, media flow, the forces and/or moments required to deflect the expansion joint to their expected movements, and the frictional forces caused by the pipe guides, directional anchors and supports. In certain applications it may be necessary to consider the weight of the pipe and its contents and any other forces and/or moments.

THE USE OF CONTROL UNITS/THRUST RESTRAINTS

Restraints in the form of tie rods, control units, or limit rods can be used in conjunction with expansion joints and connectors to restrain pressure thrust force, or to restrict the bellows movement range (axial, lateral, and angular) during normal operation.

Control units are typically referred to in the case of rubber expansion joints and pump vibration connectors. A control unit is a system of two or more control rod assemblies placed across an expansion joint or connector from flange to flange to minimize possible damage to the expansion joint caused by excessive motion of the pipeline. This excessive motion could be caused by the failure of an anchor or some other piece of equipment in the pipeline. In expansion compensation applications, or in vibration control application where system anchors are in place on either side of the expansion joint, control rod assemblies are usually set at the maximum allowable expansion and/or compression of the joint and can absorb the static pressure thrust developed at the expansion joint during normal system pressures (please refer to Appendix for control unit pressure limitations). When used in this manner, they are an additional safety factor, minimizing possible failure of the expansion joint and possible damage to the equipment. Control units will adequately protect the joints but the user should be sure that pipe flange strength is sufficient to withstand the total force that will be encountered.

The term ***tie rods*** are used to describe devices on metallic expansion joints whose primary function is to continuously restrain the full bellows pressure thrust during normal operation while permitting only lateral deflection. In the case of metallic expansion joints, ***limit rods*** would be the equivalent to control units on rubber expansion joints.

Thrust restraints must be used when it is not feasible in a given structure to provide adequate anchors in the proper locations. In such cases, the static pressure thrust of the system will cause the expansion joint or connector to extend to the limit set by the control rods which will then preclude the possibility of further motion that would tend to lengthen the joint. Despite the limiting action that control rods have on the joint, they must be used when proper anchoring cannot be provided. It cannot be emphasized too strongly that expansion joints, by virtue of their function, are not designed to take end thrusts and, in all cases where such are likely to occur, proper anchoring is essential. If this fact is ignored, premature failure of the expansion joint is a forgone conclusion.

In addition to expansion compensation applications, thrust restraints must be utilized in vibration and noise control applications when adequate anchors cannot be installed in conjunction with the expansion joints or connectors. When anchors are absent in these vibration and noise control applications, control units must be set in the snug position. If the control units are set in a slack position, the expansion joint could extend under pressure, moving the adjacent piping or equipment. The resulting loss in vibration and noise control efficiency due to setting the control units in the snug position can be reduced by the use of rubber hat washers or double thick grommets between the outside nuts and the control unit plates.

For compression control, pipe sleeves can be installed over the control rods. The purpose of these sleeves is to prevent excessive compression in the expansion joint. The length of this pipe sleeve should be such that the expansion joint cannot be compressed beyond the maximum allowable compression figure stated by the manufacturer.

The proper installation configuration is extremely important when working with any restraining devices. Explicit installation instructions should always be made available to installing personnel. The figure below shows the proper configuration of a control unit assembly on a rubber connector.

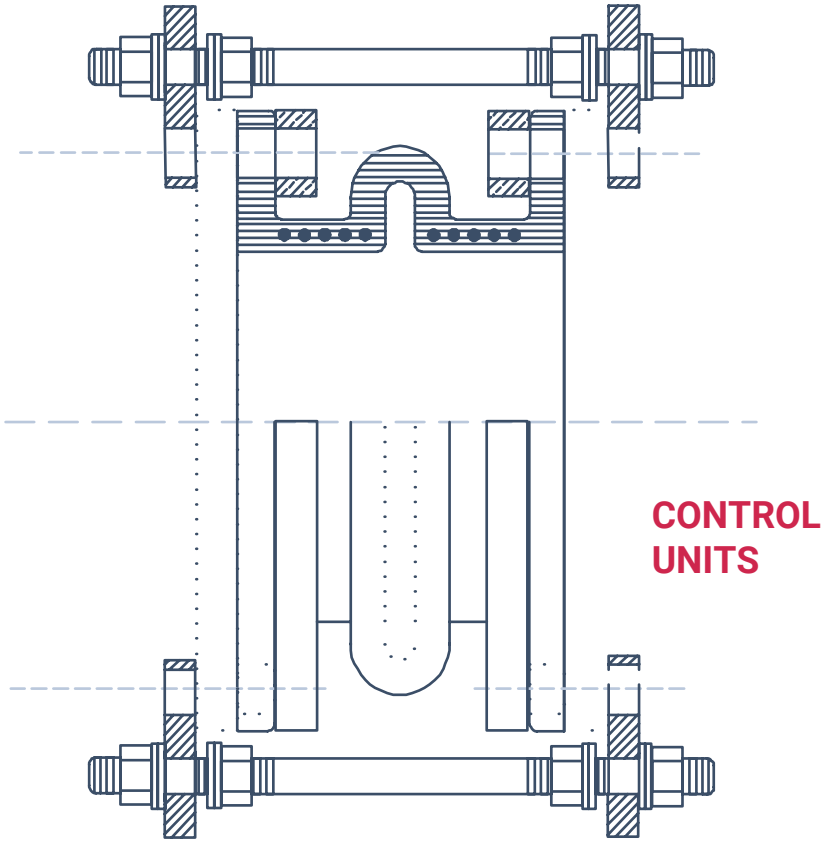

EXPANSION JOINT PLACEMENT & GUIDING

When thermal growth of a piping system has been determined to be a problem, and the use of an expansion joint is indicated, the most effective expansion joint should be selected as a solution. When using expansion joints, it should be kept in mind that movements are not eliminated, but are only directed to certain points where they can best be absorbed by the expansion joint. It can be stated generally that the proper location of expansion joints is close to a main anchoring point. Following the joint in the line, a pipe guide or guides should be installed to keep the pipe in line and prevent undue displacement of this line. This is the simplest application of a joint, namely to absorb the expansion and contraction of a pipeline between fixed anchor points. For an ***expansion joint*** to function as an expansion compensating device, it must be placed between two anchor points.

The first step in designing the expansion joint/piping system is to choose the tentative location of the pipe anchors. The purpose of these anchors is to divide a piping system into simple, individual expanding sections. Since thermal growth cannot be restrained (see Appendix for chart on thermal growth of piping), it becomes the function of the pipe anchors to limit and control the amount of movement that the expansion joints, installed between them, must absorb. It is generally advisable to begin with the assumption that using single or double expansion joints in straight axial movement will provide the most simple and economic layout. ***Never install more than one "single" type expansion joint between any two anchors in a straight run of pipe.***

In general, piping systems should be anchored so that a complex system is divided into several sections which conform to one of the configurations shown below:

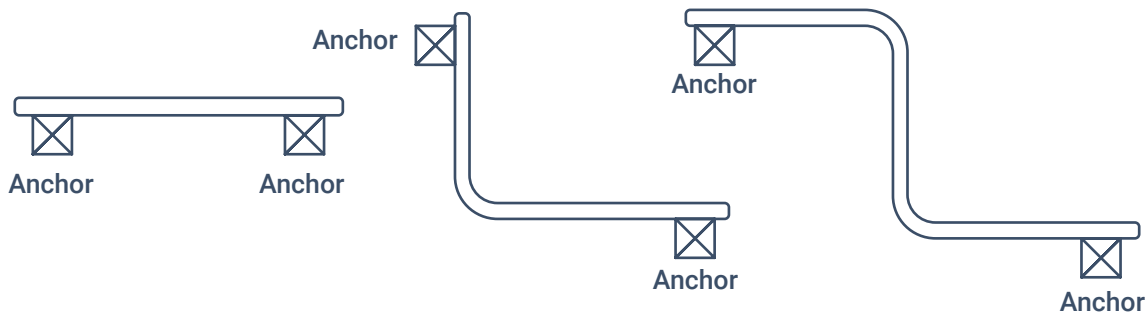

Straight Run **L-Bend** **Z-Bend**

Major pieces of equipment, such as turbines, pumps, compressors, etc., may function as anchors, provided they are designed for this use. In all cases, solid anchoring is necessary whenever the pipeline changes direction and expansion joints in that line should be located as close as possible to those anchor points.

After tentative system anchors have been laid out, the next step before deciding the number and types of expansion joints to be placed in a piping system, is in calculating the amount of thermal growth expected. In determining thermal movement, all potential sources of temperature must be considered. Usually, the temperature of the flow medium is the major source of dimensional changes, but in certain extreme cases, ambient temperature outside the system can contribute to thermal movement (see Appendix for chart on thermal growth of piping).

Piping runs should be divided into sections short enough so that the expected thermal growth can be accommodated by one expansion joint. In steam systems, condensate lines, and high temperature water lines, metallic expansion joints are recommended. Expansion joint styles such as dual externally pressurized with center anchor base can absorb as much as 16” of axial movement. Free-flexing metal bellows are usually limited to axial movement ratings of 2” to 2-1/2”. These two styles are illustrated below:

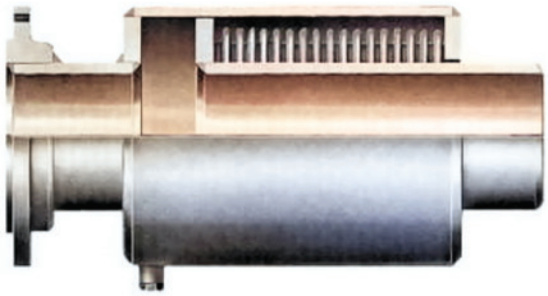

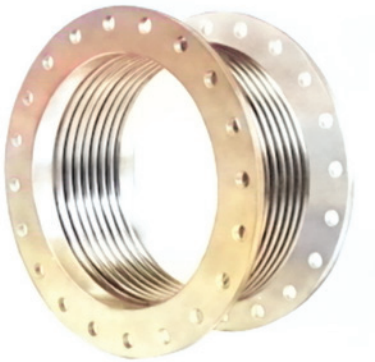

Pipe alignment guides are a vital part of any system containing joints designed to absorb thermal growth. Correct alignment of the pipe adjoining an expansion joint is of extreme importance to its proper function. Although expansion joints are designed and built for a long and satisfactory life, maximum service will be obtained only when the pipeline has the recommended number of guides and is anchored and supported in accordance with good piping practices. Proper supporting of the pipeline is required not only to support the pipe itself, but also to provide support at each end of the expansion joint. Pipe guides are necessary to insure proper alignment of movement to the expansion joint and to prevent buckling of the line. Buckling is caused by a combination of the expansion joint flexibility and the internal pressure loading on the pipe which causes it to act like a column loaded by the pressure thrust of the expansion joint.

When locating pipe guides for applications involving axial movement only, it is generally recommended that the expansion joint be located near an anchor, and that the first guide be located a maximum of four pipe diameters away from the expansion joint. This arrangement will provide proper support for each end of the expansion joint. This distance between the first and second guide should not exceed 14 pipe diameters, and the distance between the remaining anchors should be determined from the Pipe Guide Spacing Chart located in the Appendix.

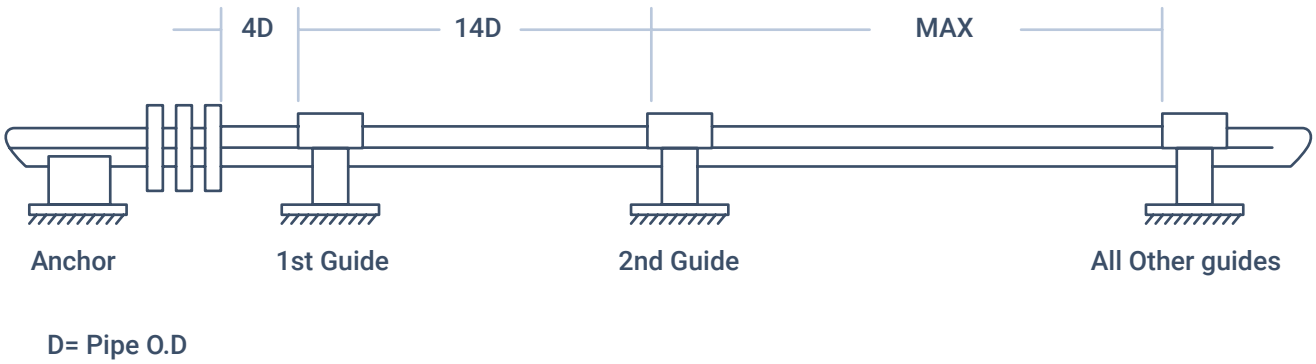

Proper Pipe Guide Location

The most common types of guides are shown in the illustration to the right. For systems subjected to lateral motion or angular rotation, directional anchors or planar guides may be required.

Additional pipe supports are often required between guides in accordance with standard piping practice. A ***pipe support*** is any devise which permits free movement of the piping while carrying the dead weight of the pipe and any valves or attachments. Pipe supports must also be capable of carrying the live weight. ***Pipe supports cannot be substituted for pipe alignment or planar guides***. Pipe rings, U-bolts, roller supports, spring hangers, etc., are examples of conventional pipe support devises.

Contact Global-Flex for diagrams on typical expansion joint layouts involving different types of expansion joints, anchors, and piping configurations.

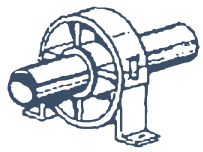

Standard Pipe Alignment Guide

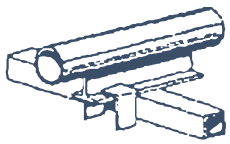

Toe Guide

Strap Guide

Common Pipe Guides

PUMP AND VIBRATION CONTROL APPLICATIONS

Anchoring and the provision for pressure thrust forces are just as important in vibration and noise control applications as it is in expansion compensation applications. When using bellows, arch, or sphere type connectors on pumps, the effects of pressure thrust force will be experienced by the system. Anchors and/or restraining devices must be incorporated in the pump flex connection designs, as well as any connectors located downstream from the pump.

The figure to the right illustrates a simple piping system. Solid anchoring is provided wherever the pipeline changes direction and the expansion joints in that line are located as close as possible to those anchor points. In addition, following the expansion joints, and again as close as is practical, pipe guides are employed if thermal expansion of the pipeline is expected, to prevent displacement of the pipeline. It should be pointed out that the elbows adjacent to the pump are securely supported by the pump base so that no piping forces are transmitted to the flanges of the pump itself. Anchors shown at the 90° and the 45° bend in the pipeline must be solid anchors designed to withstand the thrust developed in the line together with any other forces imposed on the system at this point.

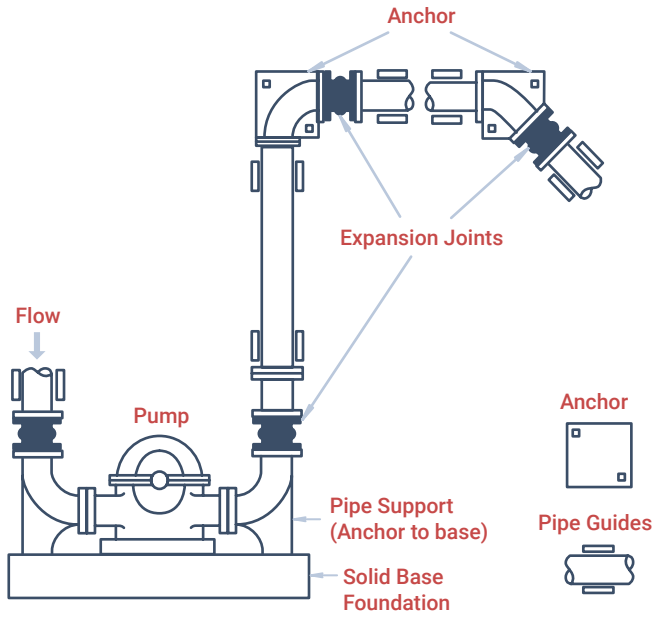

Typical Piping Layout Utilizing Expansion Joints When Equipment And Piping Are Properly Anchored

The figure on the next page demonstrates the type of piping connections that must be used in the event it is impossible to employ anchoring. The anchor point at the upper 90° elbow in the discharge line has been eliminated. In this situation, it is necessary to employ properly designed control units with the joints located in this non-anchored line. Without the use of these control units, the pipeline between the pump and the anchor at the 45° bend would be severely displaced due to the elongation in the flexible rubber expansion joint. This elongation would proceed until the joints rupture. The use of control units in this case permits expansion of the pipeline in both the vertical and horizontal direction between the pump and the anchor at the 45° bend. However, it does preclude the possibility of contraction in these respective lines as the further extension of the expansion joint is impossible because of the control units.

It should be noted that when using stainless steel braided connectors or non-arch type rubber vibration absorbers in vibration control/pump applications, the need for thrust restraints or system thrust blocks are eliminated. These types of connectors are discussed in Section 3, as well as the relative merits of different types of connectors in terms of vibration and noise reduction efficiency and the ability to accommodate movements and offsets.

The figure shows a very common pump installation. Instead of being mounted on a solid foundation, the pump is supported off the floor on vibration mounts. There is nothing wrong with this type of installation. The supplier of the vibration mounts should be made aware of the fact that these mounts must be designed, not only to support the weight of the pump, its motor, and base, but must also absorb the vertical thrust that will occur in both the suction and discharge lines. It should also be noted that the thrust in the respective pipelines will exert a force on the inlet and outlet flanges of the pump, and the pump manufacturer should be contacted to determine whether or not the pump casing is strong enough to withstand this force. If this is not done, it is very possible that this force can be large enough to crack the connection flanges.

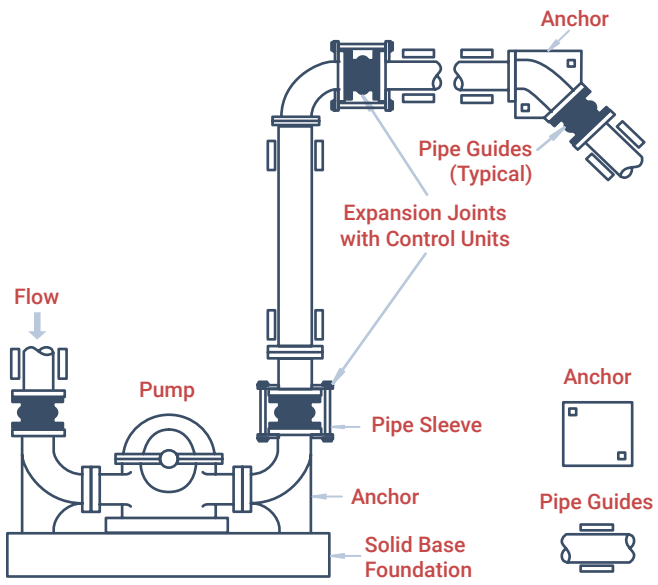

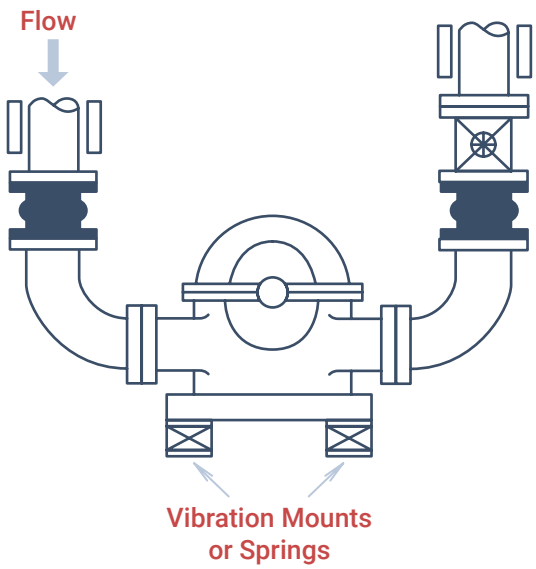

An improved installation is shown below left. The vibration mounts under the pump base need only support the pump, its motor, and base. The vibration mounts under the elbow supports can then be designed to withstand the thrust developed in the suction and discharge lines.

In the figure on the right, a complete secondary base is provided for the pump base and the two elbow supports. This secondary base is equipped with vibration mounts to isolate it from the floor. Once again, these mounts must be designed to take into account all the loads and forces acting upon the secondary base. These obviously are the weight of the equipment plus the thrusts developed in the suction and discharge lines.

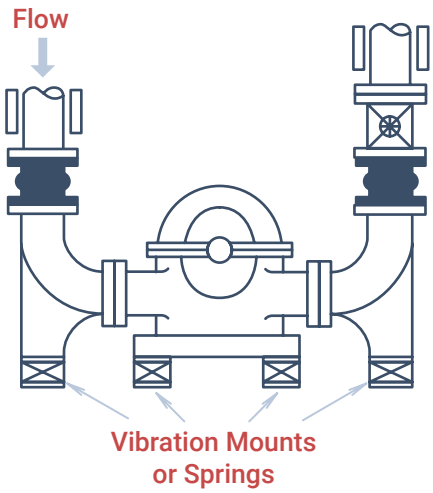

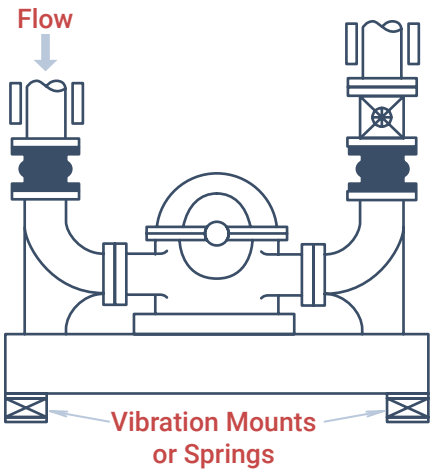

SPECIFYING PROPER INSTALLATION AND WRITTEN INSTALLATION INSTRUCTIONS

A large portion of expansion joint system problems during hydro-test, as well as problems later are caused by poor installation. Very often, expansion joints, thrust restraints, pipe guides, and anchors are installed incorrectly or do not take all of the system factors into account. The specifying engineer should take care to specify at least the basic guidelines for proper installation of expansion joints and other piping components. These installation specifications should include the placement of pipe alignment guides and the whether control units or tie rods should be installed. If piping offsets are expected, connectors should be of sufficient length to accommodate the offsets with a specified cycle life.

It is also advisable to specify that detailed installation instructions for expansion joints and connectors, and also for control units, be provided by the supplier of these products to the installing contractor. These instructions should not only be included with standard sets of O & M manuals, but it should be specified that installation instruction tags be wired on to each joint and control unit set. Past experience has shown this to be the most effective way of getting the correct guidelines into the hands of the actual installers. A great number of potential problems can be avoided by the use of this type of specification.

In addition, it is advisable to specify that the expansion joint manufacturer's representative inspect the installation of expansion joints and other connectors prior to hydro-test. The punch-lists generated from this inspection should be completed before a hydro-test is performed.

Global Flex Mfg.

SECTION 3

PRODUCTS FOR VIBRATION & NOISE CONTROL

Choose the best product for vibration & noise control
Basic construction & styles available

PRODUCTS FOR VIBRATION & NOISE CONTROL

NOISE & VIBRATION REDUCTION CHARACTERISTICS

Engineers can solve anticipated problems of vibration, noise, shock, corrosion, abrasion, stresses, and space by incorporating expansion joints and flexible connectors into designed piping systems.

Expansion joints and flexible connectors isolate or reduce vibration caused by equipment. Some equipment requires more vibration control than others. Reciprocating pumps and compressors, for example, generate greater unbalanced forces than centrifugal equipment. However, expansion joints and flexible connectors dampen undesirable disturbances of harmonic overtones – vibrations caused by centrifugal pump and fan blade frequency. This is based on actual tests conducted by a nationally recognized independent testing laboratory. Expansion joints and flexible connectors reduce transmission of vibration and protect equipment from the adverse effects of vibration. Subsequent to going on stream, normal wear, corrosion, abrasion, and erosion eventually bring about imbalance in motive equipment, generating undesirable noises transmitted to occupied areas.

CHOOSE THE BEST PRODUCT FOR VIBRATION & NOISE CONTROL

Rubber, or elastomeric flexible connectors will typically provide superior performance in comparison to metallic or fluoroplastic connectors in terms of vibration and noise control. Rubber connectors should always be considered first, unless operating conditions preclude their use. It has been determined by vibration control consultants that lengthening rubber and metallic connectors increases their effectiveness for vibration and noise control. Double arch rubber joints have been more efficient than single arch; double sphere connectors more efficient than single sphere connectors; and longer styles of braided metal connectors more effective than shorter styles.

The Rubber Expansion Joint Division of the Fluid Sealing Association has done extensive work on relating the vibration absorbing qualities of rubber to rigid steel pipe. These tests were conducted by a nationally recognized independent testing laboratory. The chart on the following page is an effort to show a practical application of these test results for both an expansion joint and a flexible rubber pipe (vibration absorber).

Contained within the Appendix is a case study of the exact effectiveness of replacing metal expansion joints with rubber expands ion joints in a water pumping system in a high-rise building.

	INSTALLATION IN PIPE WITH A:					
PIPE VIBRATION	EXPANSION JOINT 8" ID X 6" F/F			RUBBER PIPE 8" X 24" F/F		
FREQUENCY	VIBRATION REDUCTION AT			VIBRATION REDUCTION AT		
HZ	10 PSIG	50 PSIG	80 PSIG	10 PSIG	50 PSIG	80 PSIG
40	37%	55%	72%	87%	87%	93%
68	60%	68%	78%	95%	95%	99%
125	44%	50%	60%	99%	99%	99%
250	44%	50%	50%	96%	97%	99%
500	65%	89%	90%	91%	93%	94%
1000	90%	96%	98%	82%	91%	96%
2000	94%	95%	96%	99%	99%	99%
4000	90%	93%	97%	99%	99%	99%
8000	89%	89%	94%	97%	97%	98%

EXAMPLE: *If an 8" steel piping system had a major vibration frequency of 1000 HZ at 50 PSIG, the installation of an expansion joint into the system, the percentage of reduction of vibration would be 96%.*

In situations involving steam, steam condensate, compressed gases, and vacuum pumping, rubber expansion joints are not recommended. In these cases, metallic expansion joints are the best and safest choice. In addition, metallic expansion joints should be considered in hot water systems that will see continuous temperatures over 200°F.

BASIC CONSTRUCTION & STYLES AVAILABLE

Molded Rubber Spheres With Metallic Floating Flanges

Rubber spherical connectors provide excellent noise and vibration absorbing qualities, and in addition can compensate for considerable pipe movements. The design incorporates a long radius arch, providing additional movement capabilities when compared to metal braided connectors. The carcass of this type of connector does not contain metallic reinforcement. These connectors are available in a single sphere flanged configuration for limited movements, or a double sphere flanged configuration for greater movements. Threaded spherical connectors are double sphere type with female union ends. The flange connectors utilize a beaded rubber end that is designed to engage rotating steel 150# flanges.

Along with vibration and noise control capabilities, spherical connectors are capable of absorbing axial, lateral, and angular movements. Spherical neoprene connectors have pressure ratings as high as 225 psi, depending on the size; generally available for pipe sizes under 20” in diameter. Temperature ratings are typically 225°F for neoprene connectors and 250°F for EPDM connectors; however, metallic pump connectors should be considered in all continuous applications greater than 200°F. Pressure thrust forces will be encountered with these products, and system anchors and/or restraining devices should be designed to deal with these forces.

Refer to ***Global-Flex 661-, (SN,SE,DN,DE,UN)*** Molded Spherical Connectors.

DOMESTIC HAND-BUILT SPOOL TYPE RUBBER EXPANSION JOINTS

Often referred to as spool type, hand-built expansion joints are manufactured on a mandrel and the rubber is wrapped to form a tube and single or multiple arches. Reinforcement consists of plies of polyester fabric and wire for pressure resistance. A rubber cover is wrapped over the reinforcement for protection. Integral duck and rubber flanges are drilled to conform to the bolt pattern of the companion metal flanges of the pipeline. Due to the built-in arch, these expansion joints can accommodate axial, lateral, and angular movements. Hand-built expansion joints can be constructed with a number of different types of elastomer, and can be build for different pressure ratings. Standard pressure ratings range from 150-250 psi with a 4:1 safety factor. Standard chlorobutyl or EPDM tube construction is rated for temperatures as high as 250°F. Double arch expansion joints will generally provide greater vibration and noise control than single arch styles. Split steel back-up rings are used for installation. Global-Flex Series REJ-L have been designed specifically for vibration and noise control applications and have been tested by independent vibration consultants. These are a highly flexible product and are manufactured in all sizes. They have been used successfully in large semi-conductor projects to solve problems experienced by spherical expansion joints from competing manufacturers. Like the molded, spherical style, domestic hand-built spool type joints will also introduce thrust forces into the piping system. These forces must be taken into consideration.

Refer to ***Global-Flex Series REJ, DREJ, CREJ,EREJ*** Domestic Hand-Built Expansion Joints.

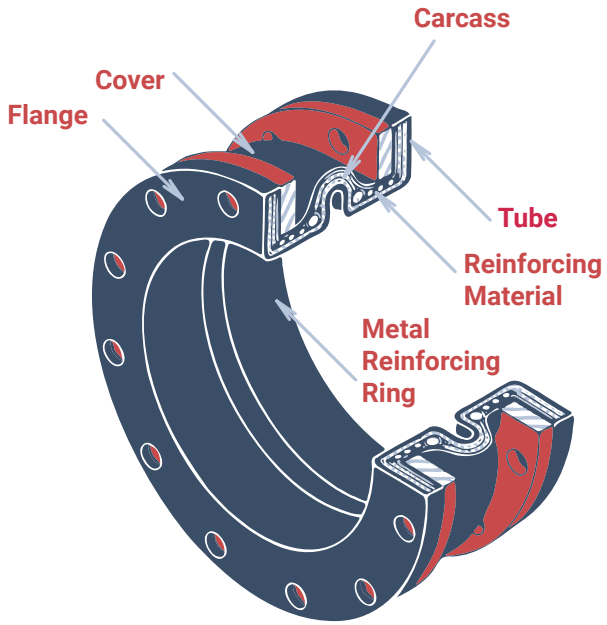

METAL BELLOWS PUMP CONNECTORS

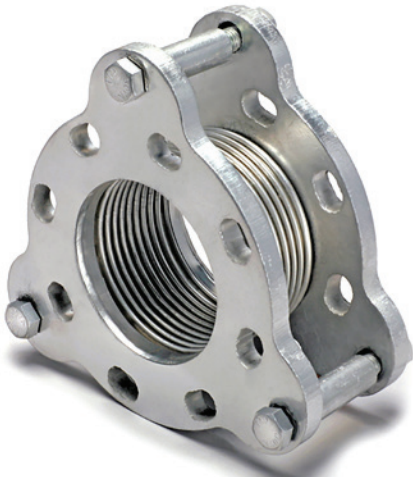

Stainless steel bellows pump connectors are designed for conditions where axial movement may be required of the connector, and are also a good choice when operating temperatures are too high to utilize rubber connectors. Metal bellows connectors must also be used in vacuum pump applications. Typical construction for this type of connector includes multi-ply bellows for high cycle life in vibration applications, and built-in limit rods to control over extension due to pressure thrust force.

Refer to ***Global-Flex Series PB and PBR Bellows Pump Connectors.***

METAL BRAIDED CONNECTORS

Braided connectors are constructed of stainless steel or bronze hose and braid. They are usually fabricated in compact overall lengths to save space, yet this short connector will provide vibration control and a small amount of misalignment. Longer length connectors are available on request for greater offset capabilities. These connectors have been used successfully for many years in pump vibration applications. Temperature limitations on metal braided connectors are far higher than that offered by any rubber type connector. Hose convolutions can be build in either annular or helical style. A variety of braiding choices are offered depending or pressure requirements. Special hose types include
Type 316 stainless steel or Monel. A full range of hose ends and flanges can be attached.

Refer to ***Global-Flex 670-47 (PF) 673-40 (PM).***

For Seismic Applications, Refer to ***Global-Flex SC and SB*** Connectors.

TEFLON® CONVOLUTED CONNECTORS

PTFE expansion joints and flexible couplings built with molded convolutions and metallic backing flanges are extremely flexible and will protect even plastic piping and surrounding equipment. All wetted surfaces are PTFE. Exterior hardware can be constructed of plated ductile iron, Type 304 or 316 stainless steel.

An additional option for chemical or high-purity service is an epoxy coating over the ductile iron flanges. Built-in limit rods keep the expansion joint from over-extending. Optional Teflon® encapsulated vacuum rings placed inside the convolutions can provide high vacuum ratings at extended temperatures. These connectors can also be cleaned, capped, and bagged for high purity service.

Refer to ***Global-Flex STYLE #712 AND #713*** Expansion Joints and Flexible Couplings.

Global Flex Mfg.

SECTION 4

PRODUCTS FOR PROCESS & UPW SYSTEMS

Convoluted Teflon bellows expansion joints
Teflon lined rubber expansion joints
Teflon lined metal hose connectors
Stainless steel connectors
Rubber expansion joints
High purity cleaning of flexible connectors

PRODUCTS FOR PROCESS & UPW SYSTEMS

PRODUCTS FOR PROCESS systems will include Teflon® flex connector products, as well as stainless steel bellow, and rubber connectors. Global-Flex also offers combinations of these products to provide the best service for the application. These combinations would include smooth bore PTFE lined stainless steel braided hose assemblies. PTFE and FEP lined rubber expansion joints, and stainless steel bellows expansion joints with PTFE, FEP, or PFA linings within the convolution.
For less hazardous and lower purity chemical and waste systems, often standard stainless steel connectors and expansion joints with chemical resistant elastomeric liners will meet the system requirements and provide lower initial cost.

It is important to remember that when dealing with plastic piping systems, low spring-rate style expansion joints should be chosen. If axial movement is expected in the pipeline and an expansion joint is placed in the system to absorb this movement, the compression spring- rate of the joint could be so high that the plastic piping is buckled before the joint is compressed. Recommended low spring-rate styles include the molded, convoluted Teflon® bellows style joints such as Global-Flex Style #112 and #113.

CONVOLUTED TEFLON® BELLOWS EXPANSION JOINTS

PTFE expansion joints and flexible couplings built with molded convolutions and metallic backing flanges are extremely flexible and will protect even plastic piping and surrounding equipment.
All wetted surfaces are PTFE. Exterior hardware can be constructed of plated ductile iron or Type 304 and 316 stainless steel. Epoxy coated flanges are also available. Built in limit rods keep the expansion joint from overextending. Optional Teflon® encapsulated vacuum rings placed inside the convolutions can provide high vacuum ratings at extended temperatures. These connectors can also be cleaned, capped, and bagged for high purity service.

Refer to ***Global-Flex STYLE #112 AND #113*** Expansion Joints and Flexible Couplings.

TEFLON® LINED RUBBER EXPANSION JOINTS

Domestic, hand-built, spool type rubber expansion joints can be lined with PTFE or FEP. Lined rubber expansion joints have the advantage of providing the most effective vibration and noise control. Wide arch styles provide more movement capabilities and greater margin for error during installation. Options include multiple arches for even more motion, a choice of body and cover elastomer, cover color, and special low spring-rate construction. Retaining rings and optional control units can be constructed of plated carbon steel, or Type 304 or Type 316 stainless steel. For high purity service, lined rubber expansion joints can be cleaned, capped, and bagged in clean room environments. The effects of pressure thrust must be considered on this product.

Refer to ***Global-Flex STYLE TREJ, TDREJ,TCREJ,TEREJ*** Expansion Joints.

TEFLON® LINED STAINLESS STEEL HOSE CONNECTORS

This product combines the strength and high temperature rating of stainless steel braided hose with the chemical resistant and high purity characteristics of PTFE. Lined metal hose connectors can be constructed using either Type 321 or Type 316 stainless steel convoluted hose with braid. Matching stainless steel stub ends are welded to the hose and floating flanges can be carbon steel or stainless steel to match the hose and stub ends. A smooth bore PTFE liner is flared out over the stub ends so that all wetted surfaces are PTFE. A variety of assembly lengths can be fabricated depending on the required offset. Applications include chemical to pipeline tank connections and pump connections, where equipment settling or seismic activity must be accommodated.

Refer to ***Global-Flex SNTSC Teflon®*** lined metal hose connectors

STAINLESS STEEL CONNECTORS

Stainless steel convoluted connectors of Type 321 or Type 316 stainless steel offer high working pressure, extended temperature ratings, full vacuum ratings, and chemical resistance to a variety of industrial fluid media. In addition, metal bellows and braided assemblies do an excellent job of absorbing noise and vibration. For high-vacuum applications, special stainless steel hose and bellows assemblies have precision welded ISO fittings attached.

High vacuum hoses are available in a variety of sizes, overall lengths, and end connections. These items are mass-spec tested, cleaned, and bagged before shipping.

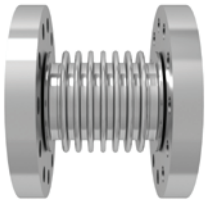

Refer to ***Global-Flex SN series standard connectors and Global-Flex series VC vacuum connectors.***

RUBBER EXPANSION JOINTS

Spherical and spool type expansion joints are available in elastomers such as neoprene, EPDM, nitrile, butyl, Hypalon, and Viton. Each elastomer has its own set of characteristics for chemical resistance, temperature rating, abrasion, resistance, and resistance to ozone and weathering. Retaining rings and thrust restraints of various alloys are available. The effects of pressure thrust must be accommodated when using this product.

Refer to ***Global-Flex REJ, DREJ,*** .

SMOOTH AND CONVOLUTED BORE TEFLON® HOSE

In many chemical and high purity applications, Teflon® hose with exterior braid works well as a flexible connector. ***Medium-pressure*** smooth-bore hose offers pressure ratings up to 3000 psi. Smooth bore tube is either white PTFE or static conducting black.

High pressure Teflon® hose carries working pressure ratings of 5000 psi or 6000 psi. High pressure hose has an innercore impregnated with carbon black to provide conductivity for static discharge. For increased flexibility and tighter bends, convoluted bore Teflon® hose is available in sizes up to 3” nominal size. Fittings for these hoses can be threaded, flanged, or include special flanges with Teflon® lined flange retainers so that all wetted surfaces are covered.

Refer to ***Global-Flex ts and ts-b medium pressure hose, TSHP high pressure hose, and TC and TC-B convoluted bore hose.***

Global Flex Mfg.

SECTION 5

COMPENSATION OF PIPELINE THERMAL EXPANSION

Advantages of expansion joints over pipe loops
Basic construction & styles available
Use of flow liners
Expansion joints without thrust loads

COMPENSATION OF PIPELINE THERMAL EXPANSION

THERMAL EXPANSION IN pipelines is produced by the following:

1. The temperature of the system when installed is different from the operating temperature.
2. The temperature cycles during the system's normal operation.
3. The system is exposed to variations in ambient temperature.

If these thermal movements (expansion with increasing temperature and contraction with decreasing temperature) are not compensated for in the system design, they may cause high stresses, and possibly result in failure of the piping or connected equipment.

There are three basic methods of compensating for thermal movement in a piping system.
1. Design a flexible piping system which utilizes changes of direction to absorb movement.
2. Use pipe loops or bends to absorb the movement.
3. Use expansion devices such as expansion joints and flexible hose.

ADVANTAGES OF EXPANSION JOINTS OVER PIPE LOOPS

Flexible piping systems and pipe loops are seldom feasible or economical where space is limited. Many expansion compensation applications are indoors where little extra room is available. Even if space limitations are not a factor, the cost of extra pipe, insulation and supports for a flexible piping system or loops often exceeds the cost of expansion joints to do the same job. Further, the extra heat loss and pressure drop resulting from the increased length for the pipe loops may increase operating costs.

BASIC CONSTRUCTION & STYLES AVAILABLE

Externally Pressurized

Externally pressurized expansion joints are often the economical and correct choice for many steam piping situations. This type of expansion joint is able to handle large amounts of axial movement due to its inherent anti-squirm design. For greater movements, dual externally pressurized expansion joints can be used.

The construction of externally pressurized expansion joints utilizes stainless steel bellows, carbon steel covers, and carbon steel end fittings of the weld type or flange type. Drain ports are made of carbon steel. The effects of pressure thrust must be taken into consideration when designing externally pressurized expansion joints into a piping system.

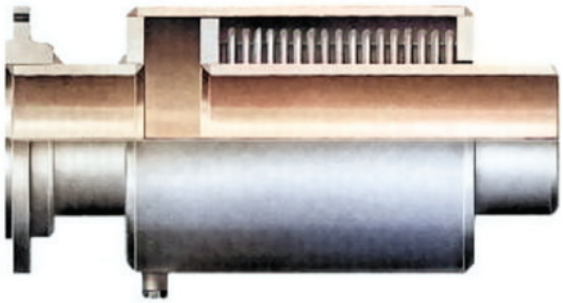

Refer to ***Global-Flex Series EPEJ*** Externally Pressurized Expansion Joints.

Expansion Compensators

Expansion compensators are constructed of metal bellows with an external guiding cover to Control potential squirm. An internal ring allows axial movement of 1-3/4”. Bellows are constructed of stainless steel, covers are carbon steel, and end configurations are typically threaded, weld-end, and copper tube ends. The most common application for expansion compensators are steam condensate lines 2” and smaller. Expansion compensators are stock items in 3⁄4” through 4”. Pressure thrust force should be considered on this product.

Refer to ***Global-Flex Series CM*** Expansion Compensators.

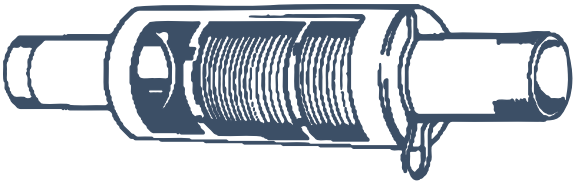

Controlled-Flexing Expansion Joints

Controlled flexing joints combine the large movement capabilities of high-corrugation bellows expansion joints with exterior equalizing rings. “T” shaped in cross section, these rings are made of cast iron, steel, stainless steel, or other suitable alloy. In addition to resisting internal pressure, equalizing rings limit the amount of compression movement per convolution. These heavy duty expansion joints provide exceptionally long life. Pressure thrust must be taken into consideration with this product.

Refer to ***Global-Flex Series CFMEJ*** Controlled-Flexing Expansion Joints.

Metal Bellows – Free Flexing

Metallic bellows expansion joints consist of convolutions of single or multiple ply material, welded or Vanstone end fittings, and occasionally controlling rings, covers, and liners.

The compensation of pipe movements are accomplished by the flexing of the metal convolutions in an axial, lateral, or angular fashion.

The most common types of metal expansion joints are free- flexing bellows type (low-corr, mid-corr, high-corr). Depending on the types of pipe movements that need to be accommodated, expansion joints can be supplied in dual designs with center anchor base attached, or universal style for large lateral movements.

The length, number, and height of convolutions or corrugations will determine the amount of axial, lateral, and angular movement that a particular expansion joint will allow. Free-flexing bellows expansion joints are typically designed for as much 1-1/2” of axial travel per bellows, depending on size. Longer length bellows must be controlled or guided by use of control rings or by use of external pressurization. Free flexing expansion joints will always expand with pressure thrust. This thrust force must be considered by the engineer.

Refer to ***Global-Flex Series MEJ*** Expansion Joints

Domestic Hand-Built Rubber Expansion Joints
Often referred to as spool type, hand-built expansion joints provide the longest service life, are the lightest and easiest to install of all expansion joints, and offer the most positive sealing surface due to full face rubber flanges. As outlined in Section 3, hand-built rubber expansion joints can be manufactured in many different types of tube and cover stocks, with Teflon® tube liners, a variety of pressure ratings, multiple arches, and special highly flexible designs. Global-Flex standard pressure ratings are 225 psi with a minimum of 4:1 safety factor. The chlorobutyl or EPDM construction is rated for temperatures as high as 250°F. Wide arches can absorb much more movement than spheres. These joints will introduce pressure thrust force on the piping system. Thrust restraints or sufficient anchors must be utilized.

Refer to ***Global-Flex REJ*** Series Expansion Joints.

USE OF FLOW LINERS

Flow liners should be employed in expansion joints to prevent turbulence and extend product life when the media velocity exceeds approximately 75 feet per second, or if abrasive media is used. In other words, liners minimize the effects on the inner surface of the bellows by the fluid or steam flowing through it. Liners come in single, tapered, or telescoping configurations according to the application requirements. An expansion joint, if provided with liners, must be installed in the proper orientation with respect to flow direction. Liners are sometimes referred to as internal sleeves.

EXPANSION JOINTS WITHOUT THRUST LOADS

There are expansion joint styles that are designed so that they will not impose pressure thrust forces on the piping system. These can be extremely valuable, problem solving products due to the fact that far less structural costs would be incurred. Standard expansion joints introduce large pressure thrust forces that must be reacted by the system anchors. By using expansion joints that do not impose thrust forces, even when the initial cost of the expansion joint product is considerably higher than a standard product, total project costs can be much less. The size of thrust blocks can be reduced substantially because the only anchor load considerations would be the spring forces and incidental friction forces. Often, the number of pipe alignment guides can be reduced also.

Universal tied expansion joints
Universal tied expansion joints consist of two bellows joined by a common connector. They are used in cases to accommodate greater amounts of lateral movement than can be absorbed by a single expansion joint. In effect, when used in piping "Z" bends, universal ties expansion joints are absorbing axial movement in the perpendicular pipe run. Tied universal expansion joints are used when it is necessary for the assembly to eliminate pressure thrust forces from the piping system. In this case the expansion joint will absorb lateral movement and will not absorb any axial movement external to the tied length.

"V" LOOPS WITH BRAIDED FLEX

Often used in piping systems to provide motion in all directions in the event of seismic activity, "V" loops work extremely well as system expansion joints. They incorporate flexible braided hose legs set at 45° angles to the pipe run. As opposed to standard expansion joints, "V" loops impose no pressure thrust load on the piping system, since any thrust forces are contained by the welded on stainless steel braid. This eliminates the need for large thrust blocks. Guiding is simplified – all that is needed are a single guide adjacent to each side of the connector.

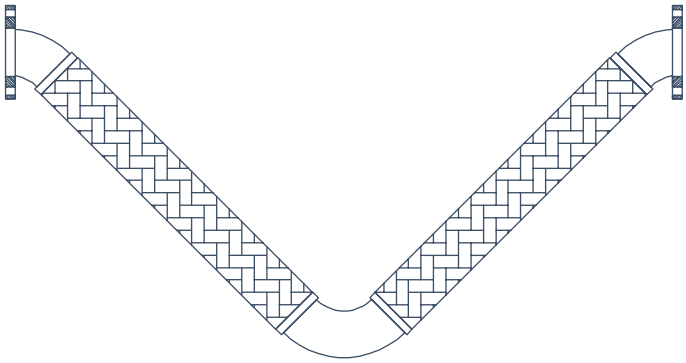

Style SC connector with stainless steel flex, and SBC connector with bronze flex are constructed to take up pipe growth of as much as 8". All of the same end configurations that can be fabricated on standard expansion joints can be added to the "V" loop. Steam and condensate connectors should incorporate a drain port at the bottom of the lower elbow. In applications other than the typical up/down position, the elbow should be supported when dealing with sizes 1-1/2" or larger.

PRESSURE BALANCED ELBOWS AND IN-LINE PRESSURE BALANCED JOINTS

Pressure balanced elbows are metallic bellows expansion joints that incorporate an extra bellows and a system of tie rods to equalize the thrust forces that are generated. A 90° elbow is utilized and floats free of pressure thrust forces. Frequently, pressure balanced elbows are attached to vessel nozzles, condensers, turbines, and pumps where low nozzle loading is essential. Main anchors are not required because forces are limited to bellows spring force. In this type of application, a change of direction is required but is ordinarily included by the pipe routing.

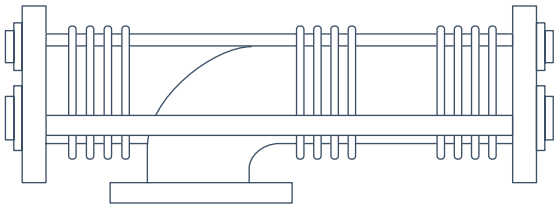

In-line pressure balanced expansion joints do not require a change of direction. Rated for axial motion only, these joints operate on the same principle as pressure balanced elbows, but utilize three sets of bellows and an intricate system of rods. Externally pressurized in-line pressure balanced expansion joints are also available. These joints are relatively large in diameter because the outer balancing bellows must have twice the effective area of the expansion joint. Just like pressure balanced elbows, thrust forces are eliminated from the piping system.

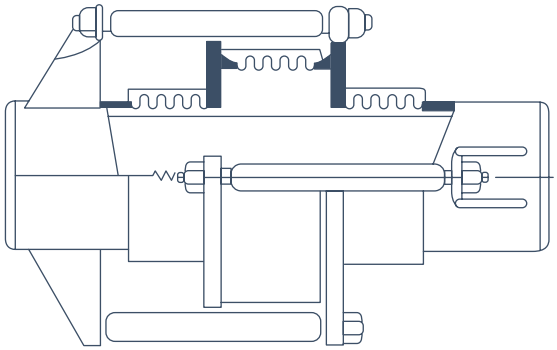

Global Flex Mfg.

SECTION 6

ACCOMMODATING OFFSET

Calculating offset for braided connectors & expansion joints

ACCOMMODATING OFFSET

CALCULATING OFFSET CAPABILITIES FOR BRAIDED CONNECTORS AND EXPANSION JOINTS

Expansion joints and flexible connectors are capable of taking up offset misalignment caused by equipment settling, seismic, or other forces. Offset motion occurs when one end of a connector is deflected in a plane perpendicular to its longitudinal axis with the ends remaining parallel. It is simple to determine the offset capabilities of expansion joints, by merely consulting the manufacturer's specification sheets on movement capabilities. The lateral deflection listed for rubber, metal, or Teflon® expansion joints describes these capabilities. It is important to note that these listed capabilities are computed as non-concurrent. For concurrent movement capabilities you must contact the manufacturer.

When using stainless steel or bronze braided connectors, offset should never exceed 25% of the center line bend radius. Live length of the connector should be calculated as follows:

$$L = (\sqrt{6YR} + Y)2$$

L = Hose live length (inches)
R = Center-line Bend Radius (inches)
Y = Center-line Offset Motion, plus or minus (inches)

Note: where offset motion "Y" occurs, both sides of center-line, the hose live length should be based on Total Travel or 2 times Y. For intermittent flexing, the offset motion should never be greater than 25% of the center-line bend radius.

Global-Flex provides both product specifications including bend radius and recommended live length charts. See attached Offset Chart on next page.

OFFSET CHART

To determine the required live length of an application, find the specific bend radius from the General Data sheet. Now, locate that bend radius on the chart below. From the offset (Y) across the top of the chart, locate the offset in inches. Read down to the bend radius and the number will be the live length required. Remember to always go to the next highest number in all calculations.

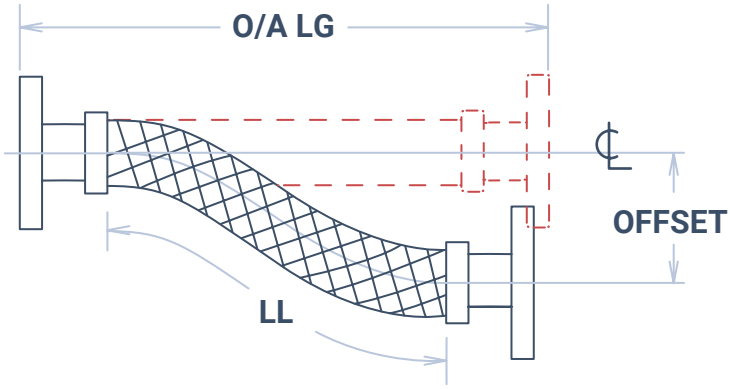

Example: *UN Series 1" Dia. with a 1" offset is required. Find the bend radius from the General Data sheet for 1" hose. It is 7.68. Under Bend Radius on this chart, go to 8. Follow across to the required offset which is 1". The live length in this case would be 7". Note: if the offset (Y) occurs on both sides of the centerline, the live length is based on the total travel or 2 times Y.*

BEND RADIUS	OFFSET Y (INCHES)														
	0.25	0.50	0.76	1.00	1.25	1.50	2.00	2.50	3.00	4.00	5.00	6.00	8.00	10.0	12.0
0.50	0.9	1.3	1.7	2.0	2.3	2.6	3.2	3.7	4.2	5.3	6.3	7.3	9.4	11.4	13.4
1	1.3	1.8	2.3	2.6	3.0	3.4	4.0	4.6	5.2	6.3	7.4	8.5	10.6	12.6	14.7
2	1.8	2.5	3.1	3.6	4.1	4.5	5.3	6.0	6.7	8.0	9.2	10.5	12.6	14.8	17.0
3	2.1	3.0	3.8	4.4	4.9	5.4	6.3	7.2	7.9	9.4	10.7	12.0	14.4	16.7	19.0
4	2.5	3.5	4.3	5.0	5.6	6.2	7.2	8.1	9.0	10.6	12.0	13.4	16.0	18.4	20.8
5	2.8	3.9	4.8	5.6	6.3	6.9	8.0	9.0	9.9	11.7	13.21	14.7	17.4	20.0	22.4
6	3.0	4.3	5.3	6.1	6.8	7.5	8.7	9.8	10.8	12.6	14.3	15.9	18.8	21.4	24.0
7	3.3	4.6	5.7	6.6	7.4	8.1	9.4	10.5	11.6	13.6	15.3	17.0	20.0	22.8	25.5
8	3.5	4.9	6	7.0	7.8	8.6	10.0	11.2	12.4	14.4	16.3	18.0	21.2	24.1	26.6
9	3.7	5.2	6.4	7.4	8.3	9.1	10.6	11.9	13.1	15.2	17.2	19.0	22.3	25.3	28.1
10	3.9	5.5	6.8	7.8	8.8	9.6	11.1	12.5	13.7	16.0	18.0	19.9	23.3	26.5	29.4
12	4.3	6.0	7.4	8.5	9.6	10.5	12.2	13.6	15.0	17.4	19.6	21.6	25.3	28.6	31.7
14	4.6	6.5	8.0	9.2	10.3	11.3	13	14.7	16.2	18.8	21.1	23.2	27.1	30.7	33.9
16	4.9	6.7	8.5	9.8	11.0	12.1	14.0	15.7	17.2	20.0	22.5	24.7	28.8	32.6	36.0
18	5.2	7.4	9.0	10.4	11.7	12.8	14.8	16.6	18.3	21.2	23.8	26.2	30.5	34.4	37.9

Global Flex Mfg.

SECTION 7

COMPENSATION OF SEISMIC MOVEMENTS

SEISMIC “V” Loops vs. Expansion joints

COMPENSATION OF SEISMIC MOVEMENTS

SEISMIC "V" LOOPS VS. EXPANSION JOINTS

Global-Flex Seismic "V" Loops are the most effective way to compensate for the unpredictable pipe movements encountered during seismic activity. Style SC connectors with stainless steel hose and braid, and SB connectors with bronze hose and braid are the first seismic connectors to absorb movement in all directions. The unique "V" design places the flexible leg at 45 degree angles to the pipe run, allowing even up and down movements.

Thrust Loads

As opposed to bellows expansion joints, Global-Flex Seismic "V" Loops impose no pressure thrust load on the piping system, eliminating the need for thrust anchoring around the connector. Simply use pipe alignment guides adjacent to the seismic "V" connector to direct any motion into the connector.

Capabilities

Both Style SC and SB connectors can be constructed to accommodate 2", 3", up to 10" of movement in all planes. The flexible legs are calculated to provide at least 2000 cycles, far beyond the life of all previous seismic connectors available on the market.

Styles of "V" Loops

Normally, the "V" loop is installed with the 90 degree return elbow hanging down but can be installed in other positions as long as the elbow is supported. Also, Global-Flex "SC Connectors" can be nested by using progressively longer pipe extensions at the base of the connector.

Chevron Nested

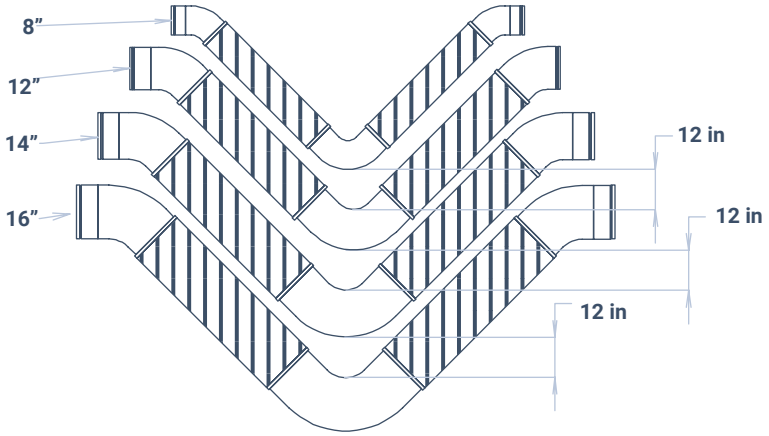

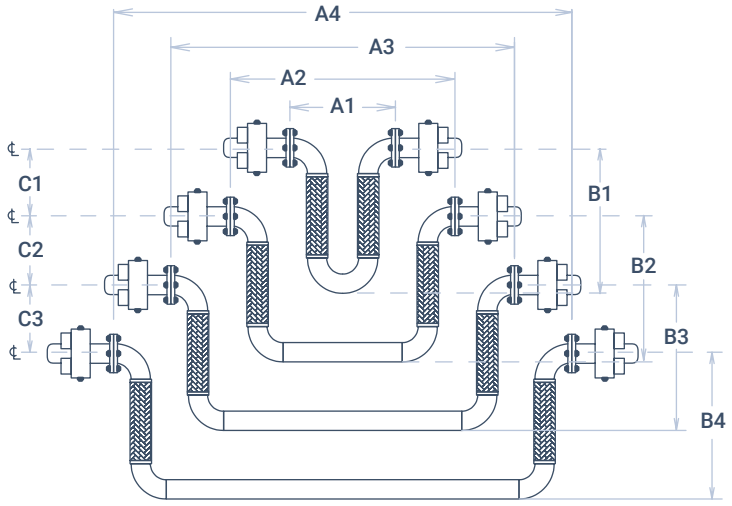

U-Loop Nest

LOOP #1 IS ALWAYS THE INSIDE LOOP. A & B dimensions will be supplied by the factory.
All other information to be supplied by contractor or engineer.

Global Flex Mfg.

SECTION 8

APPENDIX

Typical field problems
Tables and charts

APPENDIX

TYPICAL FIELD PROBLEMS CONCERNING EXPANSION JOINTS AND FLEXIBLE CONNECTORS

The following are typical problems in the field involving products from all manufacturers.

PRODUCT	PROBLEM	SOLUTION OR PRODUCT CHANGE
Import Rubber Sphere	Leaking at the flange during hydro-test	Domestic hand-built expansion joints with full face duck and rubber flanges provide excellent sealing
	Weight of large diameter joints requires use of crane for placement in high positions. Extra personnel required for installation	Domestic hand-built expansion joints are far lighter, requiring less equipment and man-hours to install
	Long deliveries of large I.D.'s cause project scheduling problems	Domestic hand-built joints generally carry deliveries from in-stock to four weeks

PRODUCT	PROBLEM	SOLUTION OR PRODUCT CHANGE
Rubber Expansion Joints	Incorrect installation of joints and control units	Require installation instructions and graphics tag to be wired to each expansion joint and control unit; require mfr. Inspection
	Rubber body is ballooning and is blistered	Application too hot for the product; use EPDM rubber or metal connectors

PRODUCT	PROBLEM	SOLUTION OR PRODUCT CHANGE
Steam Expansion Joints	Buckling pipes	Pipe alignment guides need to be installed using placement chart
	Under pressure, expansion joint uncorrugates and fails	Expansion joints must be located between anchors, or restraining devices must be used on the expansion joints

PIPE ALIGNMENT GUIDE
INTERMEDIATE SPACING CHART

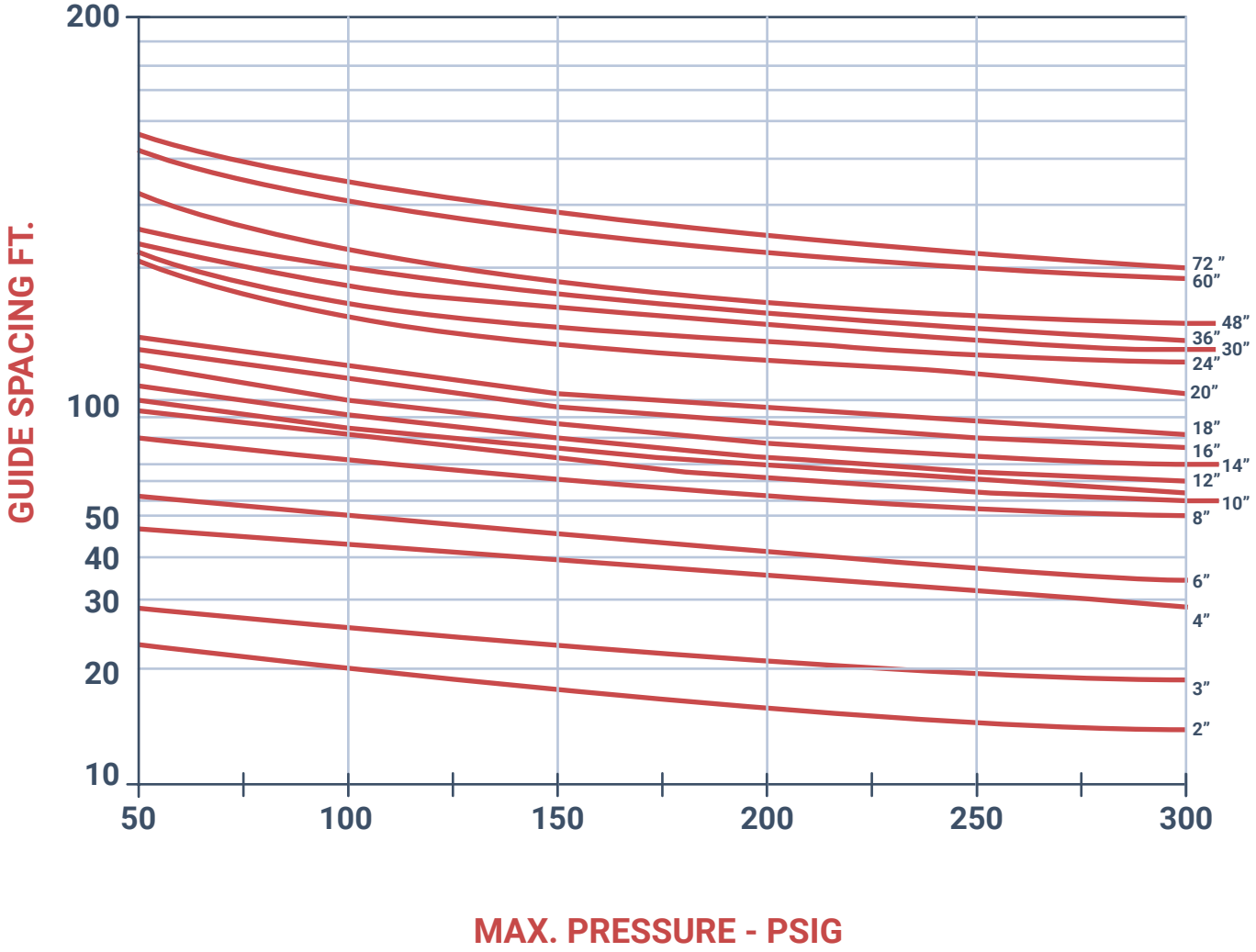

Chart is based upon sch. 40 pipe.

CONTROL UNIT						Nominal Pipe Size Exp. Jt. ID		MAXIMUM SURGE OR TEST PRESSURE OF THE SYSTEMS				
Plate Thickness		Rod Diameter		Standard Control Unit Assembly of:				Number of Control Rods Recommended				
IN.	MM	IN.	MM	RODS	PLATES	IN.	MM	2	3	4	6	8
3/8	10	1/2	13	2	4	1/2	15	1328	•	•	•	•
3/8	10	1/2	13	2	4	3/4	20	1106	•	•	•	•
3/8	10	1/2	13	2	4	1	25	949	•	•	•	•
3/8	10	1/2	13	2	4	1-1/4	32	830	•	•	•	•
3/8	10	1/2	13	2	4	1-1/2	40	510	•	•	•	•
3/8	10	5/8	16	2	4	2	50	661	•	•	•	•
3/8	10	5/8	16	2	4	2-1/2	65	529	•	•	•	•
3/8	10	5/8	16	2	4	3	75	441	•	•	•	•
3/8	10	5/8	16	2	4	3-1/2	88	365	547	729	•	•
3/8	10	5/8	16	2	4	4	100	311	467	622	•	•
3/8	10	5/8	16	2	4	5	125	235	353	470	•	•
1/2	13	5/8	16	2	4	6	150	186	278	371	•	•
1/2	13	3/4	19	2	4	8	200	163	244	326	•	•
3/4	19	7/8	22	2	4	10	250	163	244	325	488	•
3/4	19	1	25	2	4	12	300	160	240	320	481	•
3/4	19	1	25	2	4	14	350	112	167	223	335	•
3/4	19	1-1/8	29	2	4	16	400	113	170	227	340	453
3/4	19	1-1/8	29	2	4	18	450	94	141	187	281	375
3/4	19	1-1/8	29	2	4	20	500	79	118	158	236	315
1	25	1-1/4	32	2	4	22	550	85	128	171	256	342
1	25	1-1/4	32	2	4	24	600	74	110	147	221	294
1	25	1-1/4	32	2	4	26	650	62	93	124	186	248
1-1/4	32	1-3/8	35	2	4	28	700	65	98	130	195	261
1-1/4	32	1-1/2	38	2	4	30	750	70	105	141	211	281
1-1/4	32	1-1/2	38	2	4	32	800	63	94	125	188	251
1-1/2	38	1-5/8	41	2	4	34	850	72	107	143	215	286
1-1/2	38	1-3/4	44	2	4	36	900	69	103	138	207	276
1-1/2	38	1-3/4	44	2	4	38	950	63	94	125	188	251
1-1/2	38	1-1/2	38	3	6	40	1000	42	63	85	127	169
1-1/2	38	1-5/8	41	3	6	42	1050	48	72	96	144	192
1-1/2	38	1-5/8	41	3	6	44	1100	44	66	88	133	177
1-1/2	38	1-5/8	41	3	6	46	1150	41	61	82	122	163
1-1/2	38	1-5/8	41	3	6	48	1200	40	60	81	121	161
1-1/2	38	1-5/8	41	3	6	50	1250	37	56	75	112	150
1-1/2	38	1-5/8	41	3	6	52	1300	35	53	70	105	140
1-1/2	38	2	51	3	6	54	1350	43	64	86	128	171
1-1/2	38	2	51	3	6	56	1400	40	60	80	120	160
1-1/2	38	2	51	3	6	58	1450	38	56	75	113	150
1-3/4	44	2	51	3	6	60	1500	35	53	71	106	141
1-3/4	44	2	51	4	8	62	1550	33	50	66	100	133
1-7/8	48	2	51	4	8	66	1650	30	44	59	89	119
1-7/8	48	2	51	4	8	72	1800	25	38	50	75	101
2	51	2-1/4	57	4	8	78	1950	28	42	56	84	112
2-1/4	57	2-1/4	57	4	8	84	2100	24	37	49	73	98
2-1/2	63	2-1/2	63	4	8	90	2250	26	40	53	79	106
2-1/2	63	2-3/4	70	4	8	96	2400	29	43	58	86	115
2-1/2	63	2-3/4	70	4	8	102	2550	25	33	51	76	102
2-1/2	63	2-3/4	70	4	8	108	2700	23	34	46	75	92
2-1/2	63	2-3/4	70	4	8	120	3000	18	28	37	56	75
2-1/2	63	2-3/4	70	4	8	132	3300	15	23	31	46	62
2-1/2	63	2-3/4	70	6	12	144	3600	13	19	26	39	52

NOTICE:

1. NMEJ Division recommended plate thickness and rod diameter based in a yield strength of 36,000 PSI (248,211 kPa) with a maximum allowable stress of 23,400 PSI (161,337 kPa)(65% of yield.) Rod and plate load based on thrust, calculated using diameter "D." See Figure 4 and Chapter VIII, Section A.2. Dimensions can vary with a manufacturer's grade of steel and material.

2. A "Standard Control Unit Assembly" is generally furnished when ordered. If specifications and/or order does not call out a specific number of control rods or a design/test pressure of system.

3. For Control Unit length see Appendix D.

4. Pressures listed above do not relate to the actual design pressure of the expansion joint products (see Table IV), but are the maximum pressure for a specific control rod number/dimension.

5. All values based upon arch height of 2-1/2 inches (63.5 mm).

6. Reducer Type (Taper) Expansion Joints may require specially designed control rod assemblies; i.e., plate thicknesses and rod diameters may have to be altered.

OFFSET CHART

To determine the required live length of an application, find the specific bend radius from the General Data sheet. Now, locate that bend radius on the chart below. From the offset (Y) across the top of the chart, locate the offset in inches. Read down to the bend radius and the number will be the live length required. Remember to always go to the next highest number in all calculations.

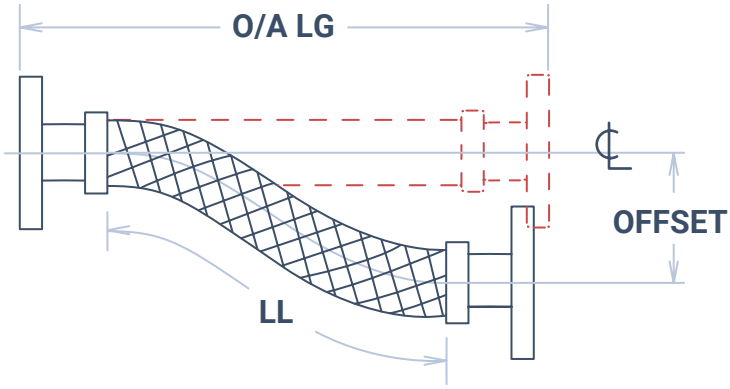

Example: *UN Series 1" Dia. with a 1" offset is required. Find the bend radius from the General Data sheet for 1" hose. It is 7.68. Under Bend Radius on this chart, go to 8. Follow across to the required offset which is 1". The live length in this case would be 7". Note: if the offset (Y) occurs on both sides of the centerline, the live length is based on the total travel or 2 times Y.*

BEND RADIUS	OFFSET Y (INCHES)														
	0.25	0.50	0.76	1.00	1.25	1.50	2.00	2.50	3.00	4.00	5.00	6.00	8.00	10.0	12.0
0.50	0.9	1.3	1.7	2.0	2.3	2.6	3.2	3.7	4.2	5.3	6.3	7.3	9.4	11.4	13.4
1	1.3	1.8	2.3	2.6	3.0	3.4	4.0	4.6	5.2	6.3	7.4	8.5	10.6	12.6	14.7
2	1.8	2.5	3.1	3.6	4.1	4.5	5.3	6.0	6.7	8.0	9.2	10.5	12.6	14.8	17.0
3	2.1	3.0	3.8	4.4	4.9	5.4	6.3	7.2	7.9	9.4	10.7	12.0	14.4	16.7	19.0
4	2.5	3.5	4.3	5.0	5.6	6.2	7.2	8.1	9.0	10.6	12.0	13.4	16.0	18.4	20.8
5	2.8	3.9	4.8	5.6	6.3	6.9	8.0	9.0	9.9	11.7	13.21	14.7	17.4	20.0	22.4
6	3.0	4.3	5.3	6.1	6.8	7.5	8.7	9.8	10.8	12.6	14.3	15.9	18.8	21.4	24.0
7	3.3	4.6	5.7	6.6	7.4	8.1	9.4	10.5	11.6	13.6	15.3	17.0	20.0	22.8	25.5
8	3.5	4.9	6	7.0	7.8	8.6	10.0	11.2	12.4	14.4	16.3	18.0	21.2	24.1	26.6
9	3.7	5.2	6.4	7.4	8.3	9.1	10.6	11.9	13.1	15.2	17.2	19.0	22.3	25.3	28.1
10	3.9	5.5	6.8	7.8	8.8	9.6	11.1	12.5	13.7	16.0	18.0	19.9	23.3	26.5	29.4
12	4.3	6.0	7.4	8.5	9.6	10.5	12.2	13.6	15.0	17.4	19.6	21.6	25.3	28.6	31.7
14	4.6	6.5	8.0	9.2	10.3	11.3	13	14.7	16.2	18.8	21.1	23.2	27.1	30.7	33.9
16	4.9	6.7	8.5	9.8	11.0	12.1	14.0	15.7	17.2	20.0	22.5	24.7	28.8	32.6	36.0
18	5.2	7.4	9.0	10.4	11.7	12.8	14.8	16.6	18.3	21.2	23.8	26.2	30.5	34.4	37.9

THERMAL EXPANSION COEFFICIENTS in./100 ft

TEMPERATURE F.	CARBON STEEL CARBON-MOLY LOW-CHROME	AUSTENITIC STAINLESS STEELS	COPPER
-25	-0.68	-0.98	-1.05
0	-0.49	-0.72	-0.79
25	-0.32	-0.40	-0.51
50	-0.14	-0.21	-0.22
70	0.00	0.00	0.00
100	0.23	0.34	0.34
125	0.42	0.62	0.62
150	0.61	0.90	0.90
175	0.80	1.18	1.18
200	0.99	1.46	1.48
225	1.21	1.75	1.77
250	1.40	2.03	2.05
275	1.61	2.32	2.34
300	1.82	2.61	2.62
325	2.04	2.90	2.91
350	2.26	3.20	3.19
375	2.48	3.50	3.48
400	2.70	3.80	3.88
425	2.93	4.10	4.17
450	3.16	4.41	4,47
475	3.39	4.71	4.76
500	3.62	5.01	5.06
525	3.86	5.31	5.35
550	4.11	5.62	5.64
575	4.35	5.93	---
600	4.60	6.24	---
625	4.86	6.55	---
650	5.11	6.87	---
675	5.37	7.18	---
700	5.63	7.50	---
725	5.90	7.82	---
750	6.16	8.15	---
775	6.43	8.47	---
800	6.70	8.80	---

TABLE 1: Noise Level Plotted on NC Chart

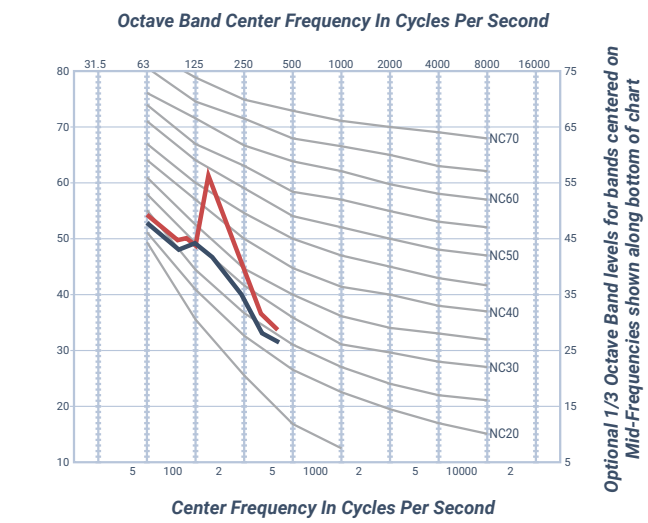

NC - 49 Noise level in board room with condenser water and secondary chilled water pumps operating

Same as above except rubber expansion joints were installed NC - 31

TABLE 2: Curves No. 2 and 3 location 2

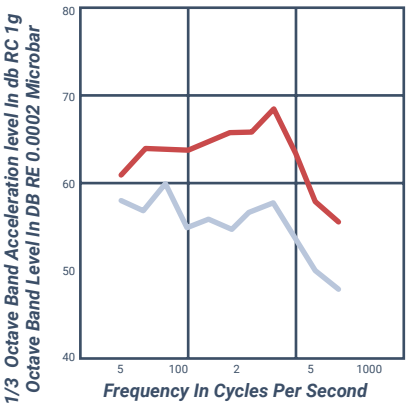

Secondary chilled water pipewall vibration before the installation of rubber expansion joints.

Same as above except with rubber expansion joints installed.

TABLE 3: Curves No. 2 and 3 location 1

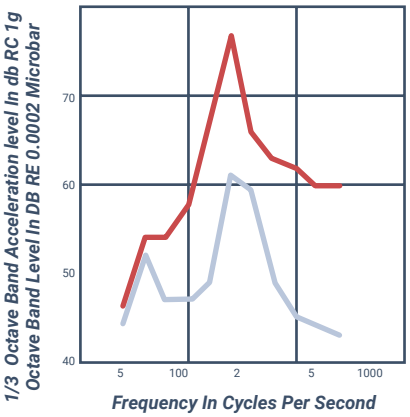

Condenser water pipewall vibration before the installation of rubber expansion joints.

Same as above except with rubber expansion joints installed.

Typical Recommended Noise Criteria Levels

Type of Room	NC* Range
Small Private Office	30 to 40
Conference Room for 20	30 to 40
Conference Room for 50	25 to 35
Theaters for Movies	30 to 40
Theaters for Drama	25 to 30
Concert Hall	25 to 35
Secretarial Offices	35 to 45
Home, Sleeping Areas	20 to 30
Assembly Hall	25 to 35
School Room	30 to 40

Mechanical Vibration in a Steel Piping System Reduced with the Installation of Pipe Connectors or Expansion Joints.

The Non-Metallic Expansion Joint Division has done extensive work on relating the vibration absorbing qualities of rubber to rigid steel pipe. These tests were conducted by a nationally recognized independent Testing Laboratory." The chart below is an effort to show a practical application of these test results for both an expansion joint and a flexible rubber pipe.

Pipe System Vibration Frequency	INSTALLATION PIPE WITH A/A N					
	Expansion Joint 8" ID X 5' F/F			Rubber Pipe 8" ID X 24" F/F		
	Vibration Reduction At			Vibration Reduction At		
HZ	10 PSIG	50 PSIG	80 PSIG	10 PSIG	50 PSIG	80 PSIG
40	37%	55%	72%	87%	91%	93%
68	80%	68%	78%	95%	96%	99%
125	44%	50%	60%	98%	99%	99%
250	44%	50%	50%	96%	97%	99%
500	65%	89%	90%	91%	93%	94%
1000	90%	96%	98%	82%	91%	96%
2000	94%	95%	96%	99%	99%	99%
4000	90%	93%	97%	97%	99%	99%
8000	89%	89%	94%	94%	97%	98%

Example: If an 8" steel piping system had a major vibration frequency of 1000 Hz at 50 PSIG, the installation of an expansion joint into the system would reduce vibration 96%

**Name of the testing laboratory and other test details, available on request*

Noise and Vibration Transmitted Through the Hydraulic Media Reduced with the Installation of Expansion Joint A Summary Test Report of Cerami and Associates, Inc.

1. PURPOSE. To measure the effects of rubber expansion joints in piping systems which produce objectionable hydraulic resonance noise.

2. TEST SYSTEM AND LOCATION. The main condenser water riser piping and the secondary chilled water piping systems running to the Board Room of a major retailer, located on the 46th floor of a building in New York City from a sub-basement. ***See Drawing.***

3. PROBLEM. These piping systems were found to transmit a highly objectionable surging noise in the Board Room. Noise frequency was identified as the pump impeller passage frequency (number of vanes in the impeller, times the rotating frequency).

3.A. Amplified Fluid Pulsations. It is interesting to note that while the pumps are located remotely from the Board Room, the acoustical energy was conveyed by the piping for more than 500 feet, in the case of the sub-basement located condenser water pumps; and transmitted structurally into the Board Room via pure riser anchors and supports located near the 46th floor. This condition represented a phenomenon which was created by a resonance condition in the piping system, re-acting in harmony with the impeller vane passage frequency and thereby amplifying the fluid pulsations to much higher levels than those at the source.

3.B. Pure-Tone Noise Fluctuations. Metal expansion joints were in the piping system prior to the installation of rubber expansion joints. Operating with the metal expansion joints in place, the system noise level had a surging quality, meaning that whenever more than one pump was operating, the puretone noise increased and decreased with a wide range of fluctuation. The peak of the surging noise was measured to be NC-49. Correcting for the highly objectionable pure-tone quality of the noise, the equivalent NC would be as high as NC-54, a totally unacceptable environment for the Board Room. ***See Chart - Typical Recommended Noise Criteria Levels.***

4. CORRECTIVE ACTION AND RESULTS. Rubber expansion joints were installed, replacing the metal expansion joints near the top of the main condenser discharge and return risers.Rubber expansion joints were also installed on the intake and discharge sides of the secondary water pump on the 46th floor. See Drawing 1.

4.A. Noise Level Reduced, Pure-Tone Eliminated. With the rubber expansion joints installed into the system, the noise level in the Board Room with two condenser water pumps and two secondary chilled water pumps operating simultaneously, was measured to be only NC-31. Furthermore, the new NC-31 environment contained no pure-tone quality. In fact, by shutting and starting the pumps, there was no detectable change in the ambient sound level. ***Table 1*** shows the "before and after" noise levels recorded in the Board Room.

4.B. Pipe Wall Vibration Reduced. The pipe wall vibration patterns were in fact significantly altered as evidenced by "before and after' readings on the pipe walls. Tables 2 and 3 show the spectrum shapes of pipe wall vibration "before and after' the installation of the rubber expansion joints. Tables show substantial reductions of pipe wall vibration, further indications of a quieter piping system.

Drawing 1 shows, schematically, the location of pumps relative to the Board Room, as well as the locations where pipe wall vibration measurements were taken.

5. CONCLUSIONS. The installation of the rubber expansion joints into the piping system effectively lowered the noise level from NC-54 to NC- 31, eliminating the pure-tone quality of the noise. We attribute the highly successful attenuation provided by the rubber expansion joints to a disruption in the acoustical standing wave pattern in the piping configuration. This disruption was being created by the sudden change in pipe wall rigidity at the expansion joint. The soft wall of the expansion joint would actually "breathe" with the fluid pulsations, thereby disrupting the steel pipe wall vibration pattern as well.

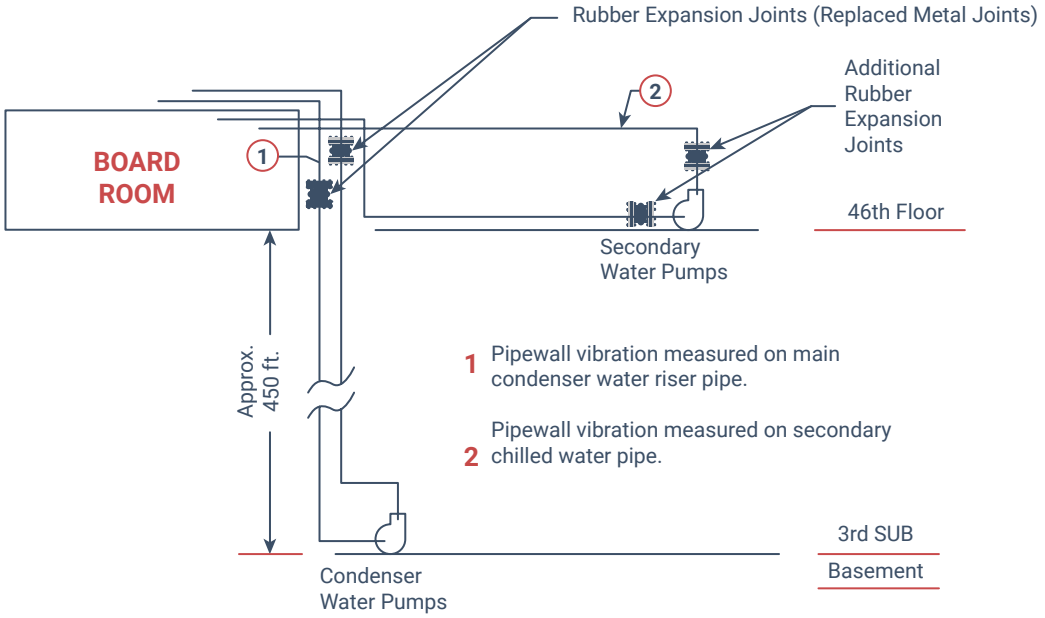

Global Flex Mfg.

Your Success is Our Success.


Your Success is Our Success.
Global Flex Mfg.
WWW.GLOBALFLEXMFG.COM
1580 CHARLES DRIVE REDDING, CA 96003 | 530-229-1320 | FAX 530-229-1329 | INFO@GLOBALFLEXMFG.COM