COMUS Group

COMUS EUROPE

Rectangular Proximity Switch - Reed based changeover contacts

Part Number : PRC-SP-039 RS 811 0748

Product Data Sheet

PICTURE

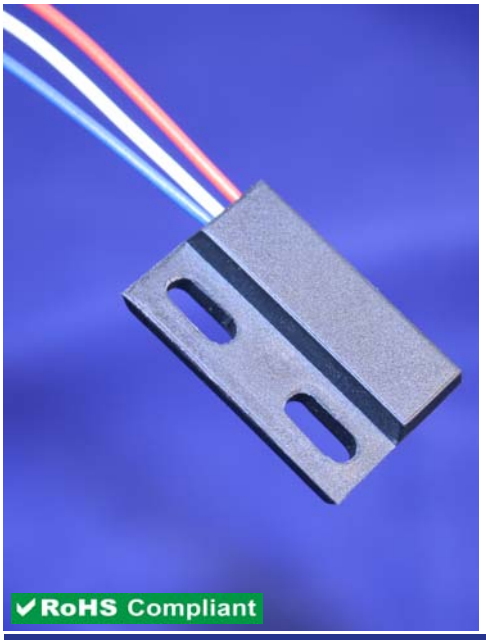

DIMENSIONS

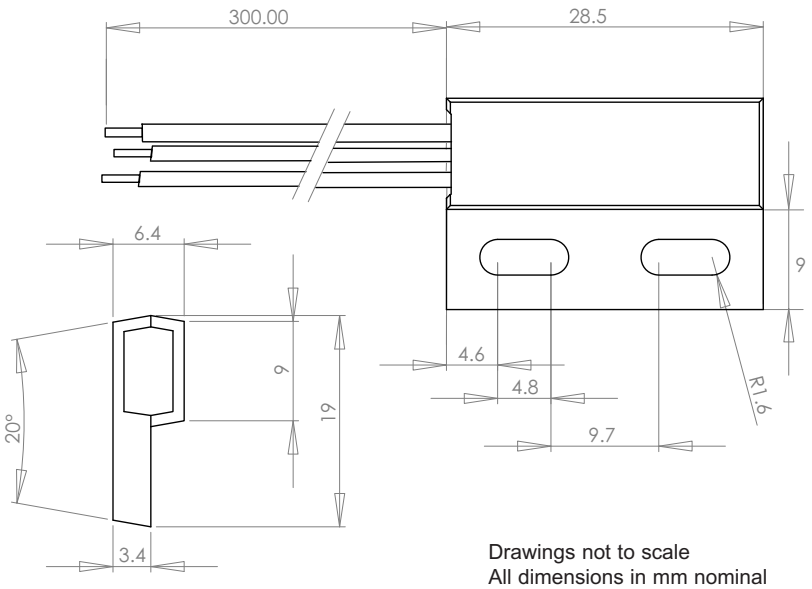

Drawings not to scale
All dimensions in mm nominal

SPECIFICATION

Contact Form / Style		Change over
Switching Voltage	Volts DC/AC	175 / 125
Switching Current	Amps DC/AC	0.4 / 0.28
Switching Capacity (Resistive)	W/VA	5
Switching Distance (Typical)	mm	8.0 mm Minimum
Contact Resistance	mOhm	120
Break down Voltage	Volts	200
Carry Current	Amps	0.5
Operating Temperature	Celsius	-40°C +105°C
Cable length	mm	300
Cable size		3 x 20 awg, blue, red and white

Applications Include

- Position and limit sensing.
- Linear actuators.
- Security system switch.
- Door Switch.

Options

- Colour: Standard = Black housing.
  Also available Blue housing/ custom lead colours
- Cable Entry: Standard = Right hand entry.
  Also available Left hand entry.
- Custom cable lengths, strip lengths, cable types, terminations.
- If you do not see what you need, jusk ask, as there is a strong possibility we can do it !

Rev. No.	Revision Note	Date	Signature
1	Datasheet	24-04-14	ML

As part of the company policy of continued product improvement, specifications may change without notice. Our sales office will be pleased to help you with the latest information on this product range and the details of our full design and manufacturing service. All products are supplied to our standard conditions of sale unless otherwise agreed in writing.

Phone : +44 (0)1255 862236 www.comus-group.com Fax: +44 (0)1255 862014

ISO 9001:2008
Certificate No. FM21080

©2014 Copyright Comus Europe Ltd, Unit 7, Rice Bridge Industrial Estate, Thorpe - Le - Soken, Essex, CO16 0HL, ENGLAND.
USA: Comus International:+1 973 777 6900, Belgium: Comus Belgium BVBA: +32 (0)12 390400