嘉尼企業股份有限公司 CANAL ELECTRONIC CO.,LTD.

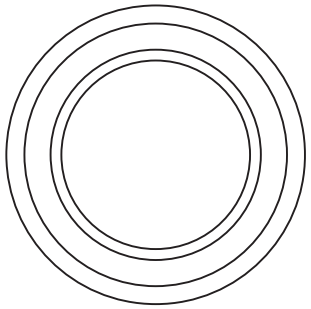

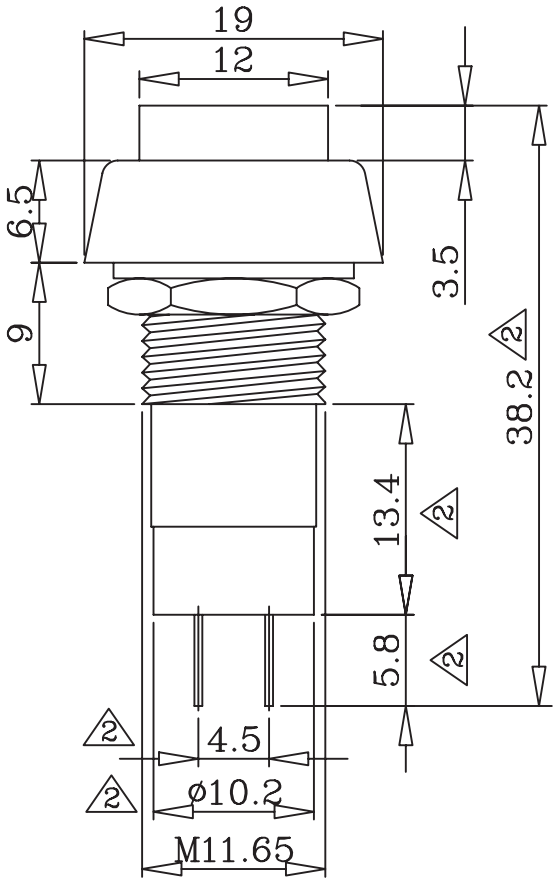

SPECIFICATIONS

1. CIRCUIT : A:ON-OFF B:(ON)-OFF
2. RATING : 1A 125VAC/250VAC
3. CONTACT RESISTANCE : 30mΩ Max
4. INSULATION RESISTANCE : DC 500V 100MΩ Min
5. DIELECTRIC STRENGTH : AC 1000V 1 MINUTE
6. ELECTRICAL LIFE : 5000 CYCLE Min
7. MECHANICAL LIFE : 10,000 CYCLE Min
8. TERMINAL MATERIAL : COPPER,ALLOY,(SILVER OR GOLD),PLATED
9. PUSH FORCE : >0.3kg
10. BUTTON COLOR : RED,YELLOW,ORANGE,BLACK,GREEN

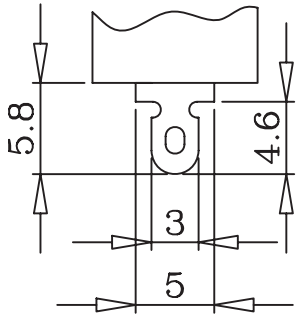

NOTE: TOLERANCES UNLESS OTHERWISE SPECIFIED: ± 0.3 (mm)

REVISION	DESCRIPION	REVISED BY	TOLEANCES .X .XX ANGLE ½°					UNIT mm	PART NAME	PBS SPEC DRAWING	DWG NO
4			DRAWN BY	Alice	DESIGNED BY	Eric	SCALE				WS0449A
3											
2 2007.02.14	修改尺寸	吳美玉	CHECKED BY		APPROVED BY		DATE	2006.08.29	PART NO	PBS-11 (A/B)	
1 2006.08.29	換新圖框,重新出圖	吳美玉									