嘉尼企業股份有限公司 CANAL ELECTRONIC CO.,LTD.

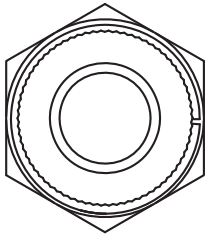

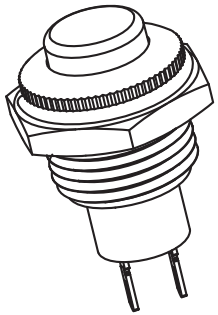

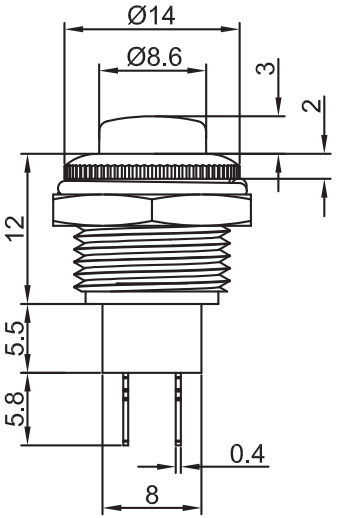

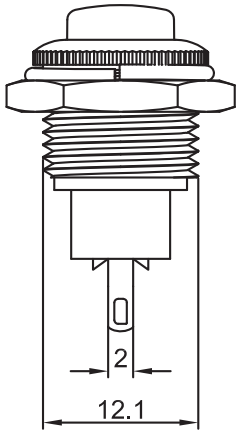

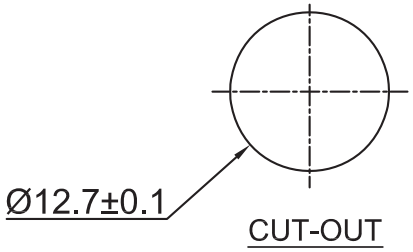

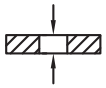

Panel Thinkness: 3mm MAX.

Rating: 3A 125V AC ;
1.5A 250V AC ;
Contact Resistance: 50mΩ Max. ;
Insulation Resistance:DC 500V 100MΩ Min. ;
Dielectric Strength:AC 1000V 1 minute
Total Travel: 2.0±0.4mm
Operating Force:150±100gf
Operating Life:10,000 cycles
Machanical Life:50,000 cycles Min.;
Operating Temperation:0°C~85°C
Function: OFF-(ON)

MATERIAL
Base: PA66, UL rated :94V-2 Min. ;
Cap: ABS ;
Terminal: Copper,Silver or Tin plated ;
Nut: Brass,Ni plated.

Y	Yellow
W	White
U	Blue
R	Red
O	Orange
G	Green
B	Black
A	Gray
CAP COLOR (X)	

REVISION	DESCRIPION	REVISED BY	TOLEANCES .X ± 0.3 .XX ± 0.15 ANGLE ± 1°					UNIT mm	PART NAME	PB SPEC DRAWING	DWG NO
4			DRAWN BY	Alice	DESIGNED BY	蔡剑	SCALE				WS1292B
3											
2 2013.05.06	修改端子間距	Alice Wu	CHECKED BY		APPROVED BY		DATE	2010.05.05	PART NO	PB-01-MM-X	
1 2010.05.05	換新圖框,重新出圖	Alice Wu									