| | |
|---|---|
| Continuous Rating | 200 Amps 12~50V DC |
| Intermittent Rating | 300 Amps |
| Cranking Rating | 1000 Amps |
| Contact Resistance | 50m ohm Max. |
| Insulation Resistance | DC 1000V 100M ohm Min. |
| Dielectric Strength | DC 2000V 1 minute |
| | AC 1000V 1 minute |
| Operation Temperature | -20°C~80°C |
| Switch Function | ON/OFF/SEPARATE |
| Actuation Force | 5±0.5 Kgf-cm |

Mounting Hole

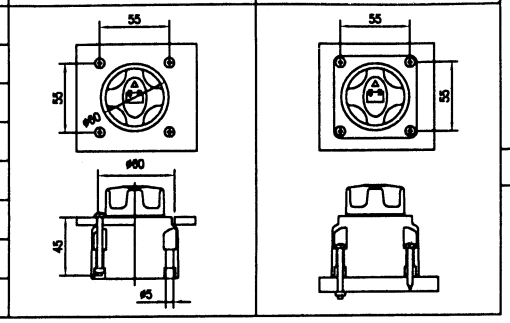


Actions Diagram

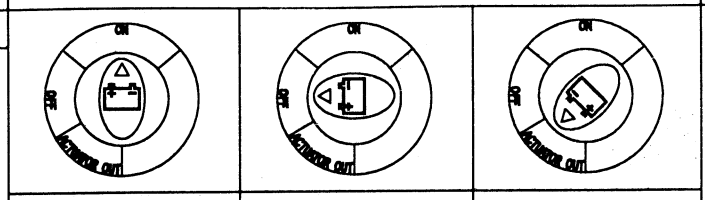


ON | OFF | Actuator out

Circuit Diagram

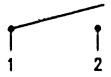


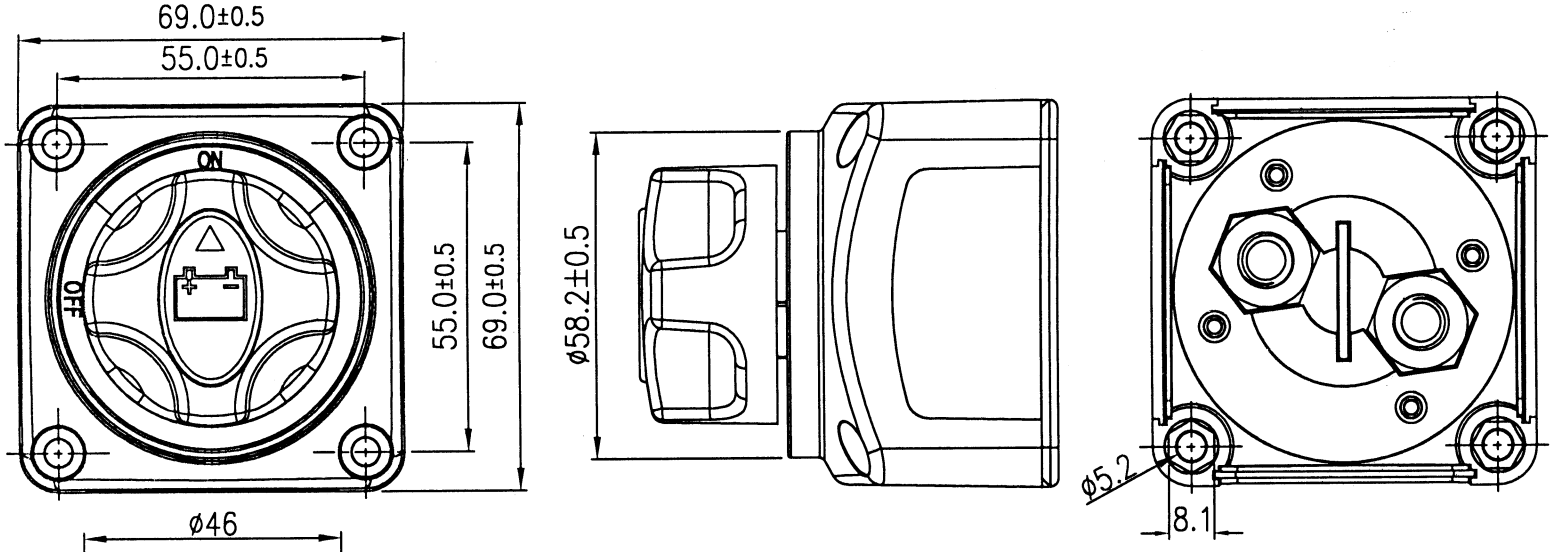


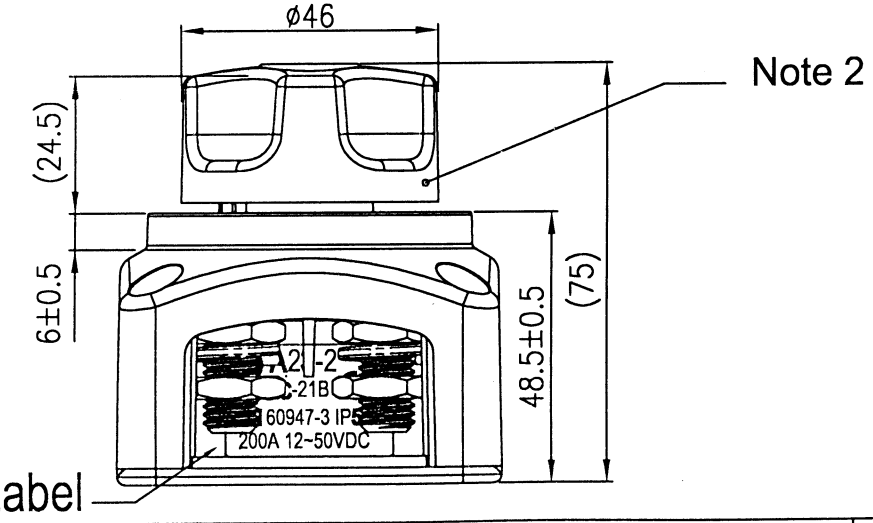


Note:
1.Tolerance is ±0.5mm(0.02") unless otherwise noted.
2.Actuator could be taken out at identified position.
3.FOR:CEI Only
4. Material is 100% PBT for the red & black part.
5. unit weight :0.245kg/1pcs

| Date | Name | Description | No. |
|---|---|---|---|
| 02/12/'14 | 柳新強 | 依客戶要求增加第4、5點說明 | △1 |

| Drawn | Checked | Approved | | 1340023 | Model Name | Battery Switch | |
|---|---|---|---|---|---|---|---|
| 柳新強 | Smiles | 姜義振 | Customer No. | | Model No. | A23-2 | Rev. X1 |
| 02/12/'14 | 2/12/14 | 2/13 | Unit | mm | | | |