嘉尼企業股份有限公司 CANAL ELECTRONIC CO.,LTD.

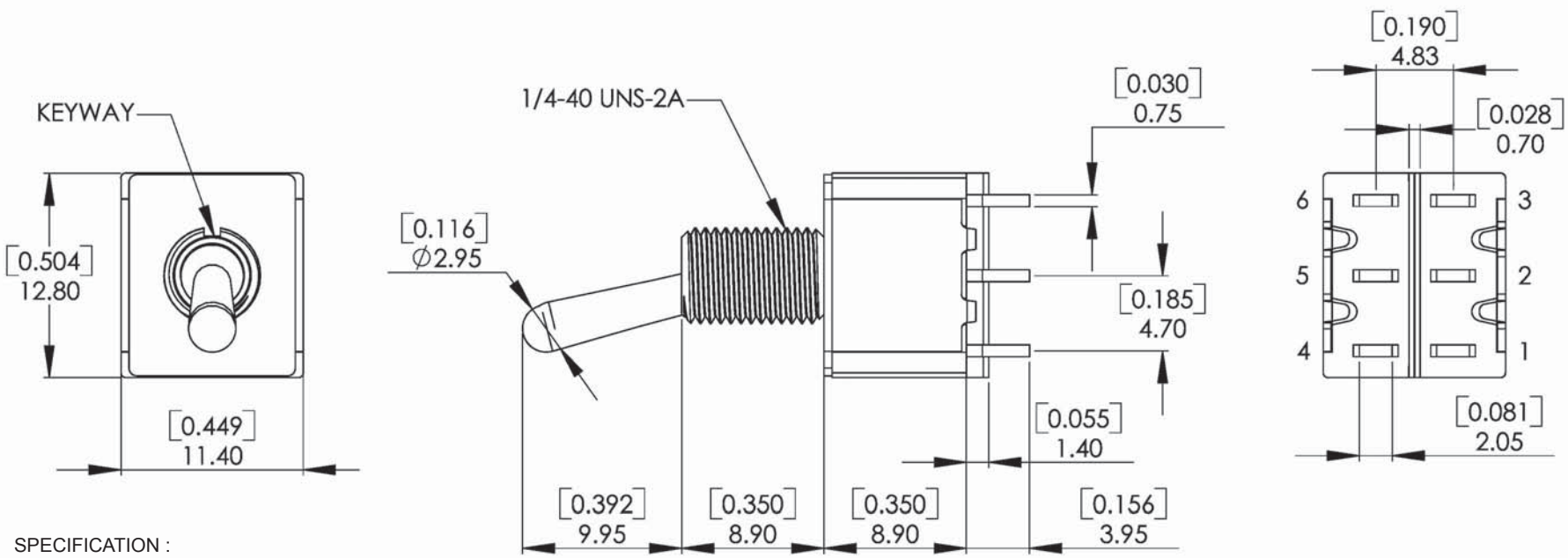

TOLERANCE
XX. ± 0.5
X. ± 0.2
.X ± 0.2
.XX ± 0.2

SPECIFICATION :

CONTACT RATING:5AMPS @120VAC or 28VDC (UL)
2AMPS @ 250VAC (UL)
0.4 AMPS @ 20VAC or DC

ELECTRICAL LIFE: 6,000 make-and-break cycles at full load.

CONTACT RESISTANCE : 10m Ω (max). initial @ 2-4 VDC.
100mA, for both silver and gold plated contacts

INSULATION RESISTANCE: 1,000M Ω min.

DIELECTRIC STRENGTH: 1,000 V RMS @ sea level.

OPERATING TEMPERATURE:-30°C to 130 °C

MATERIALS:
CASE: Dially phthalate (DAP) (UL-94V-0)
ACTUATOR: ZIN ALLOY
BUSHING: ZIN ALLOY
HOUSING: Stainless steel
TERMINAL/CONTACT: Brass, with silver or gold plated.
or gold over silver
SWITCH SUPPORT: Brass, tin plated

Schematic

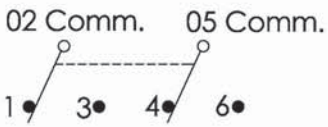

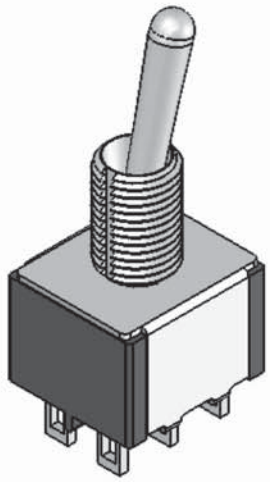

Model No.	Switcning Position		
A210-T01	ON	NONE	ON
A240-T01	ON	NONE	(ON)
A220-T01	ON	OFF	ON
A250-T01	(ON)	OFF	(ON)
A260-T01	ON	OFF	(ON)
A280-T01	ON	ON	ON
Term Comm.	2-3, 5-6	OPEN	2-1, 5-4

REVISION	DESCRIPION	REVISED BY	TOLEANCES .X .XX ANGLE ½°					UNIT mm	PART NAME	A SPEC DRAWING	DWG NO
4			DRAWN BY	Alice	DESIGNED BY	蔡劍	SCALE				WS0620A
3											
2			CHECKED BY		APPROVED BY		DATE	2012.09.21	PART NO	A2*0-T01	
1 2012.09.21	換新圖框,重新出圖	ALICE WU									