Multipole Connectors

Specifications

Cover Material:	ABS
Screw Material:	Steel

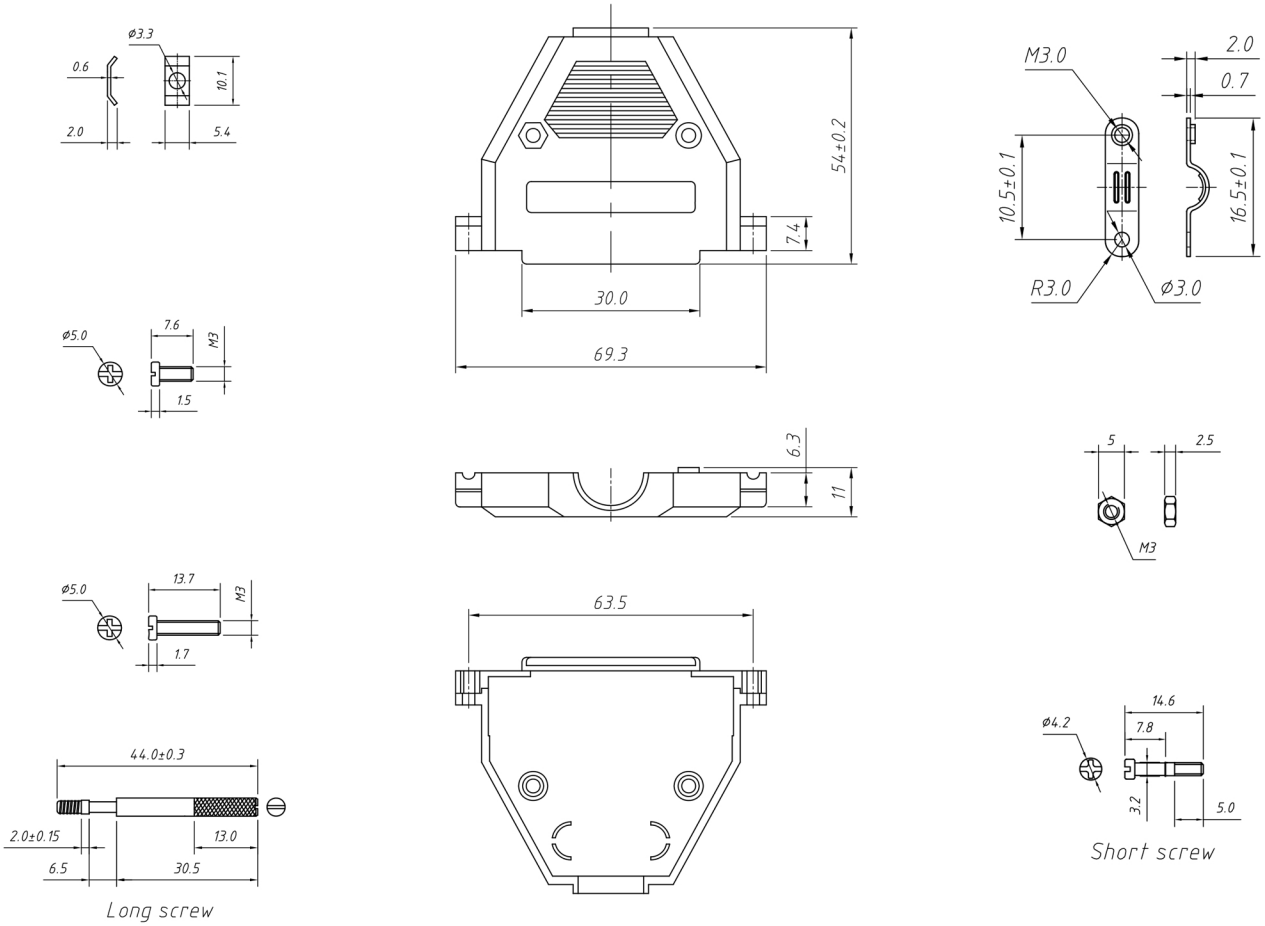

Description	Ref Code
37-Pin D-Sub Hood Cover	485032