Audio Connectors

Specifications

Contact Resistance:	30mΩ Max
Insulation Resistance:	50MΩ Min 500V DC
Withstand Voltage:	500VAC 1 minute
Housing Material:	PBT UL94V-0
Contact Material:	Brass
Operating Temperature:	-25°C to +85°C

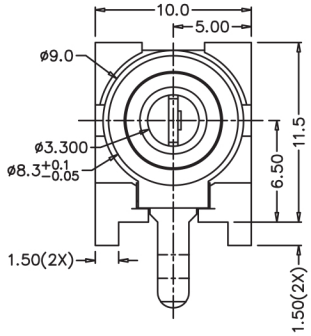

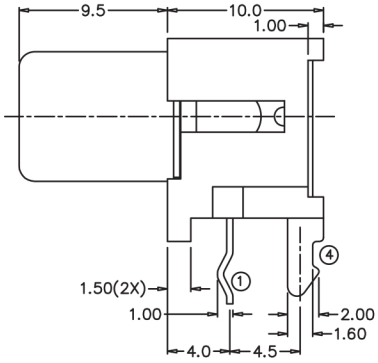

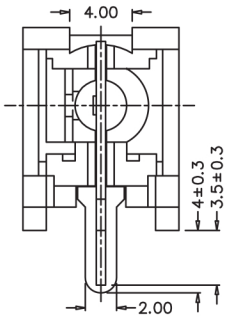

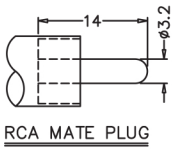

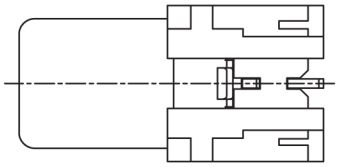

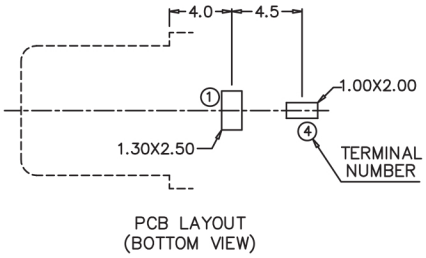

MODEL NO.	RCA-102
SCHEMATIC	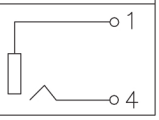

Description	Ref Code
Yellow RCA Right Angle PCB Phono Socket	480183