THE INFORMATION CONTAINED IN THIS DRAWING IS THE SOLE PROPERTY OF SEGOVIA SOLUTIONS. ANY REPRODUCTION IN PART OR WHOLE WITHOUT THE WRITTEN PERMISSION OF SEGOVIA SOLUTIONS IS PROHIBITED.

NOTES:

1. DRAWING FOR REFERENCE ONLY. DIMENSIONS VARY BASED ON APPLICATION USED.

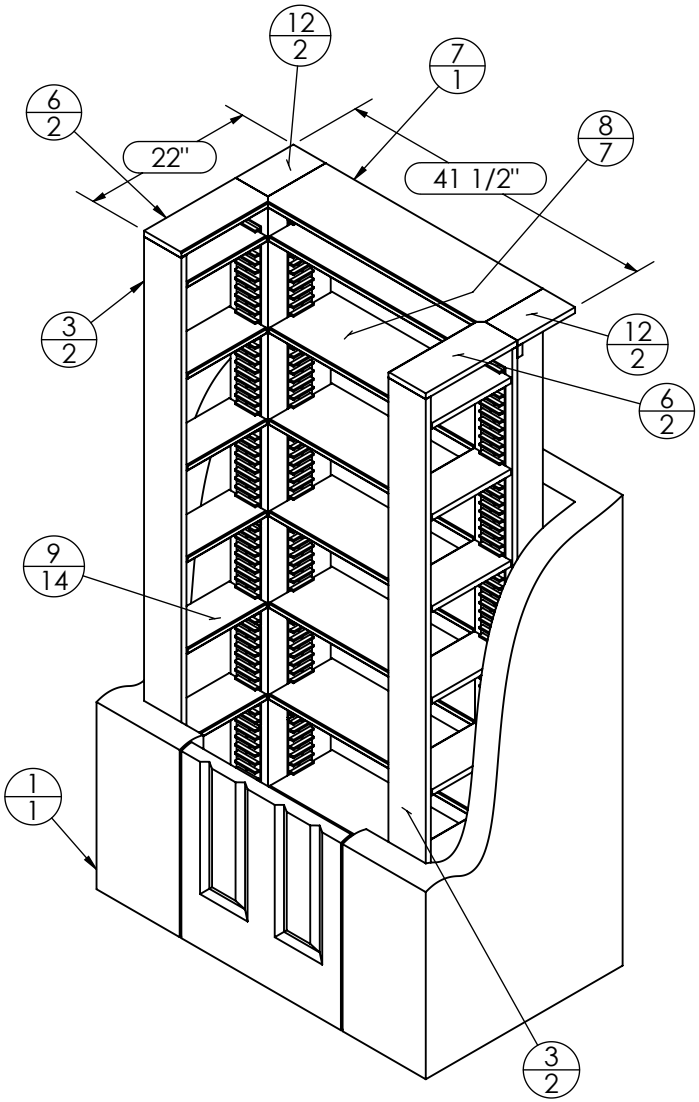


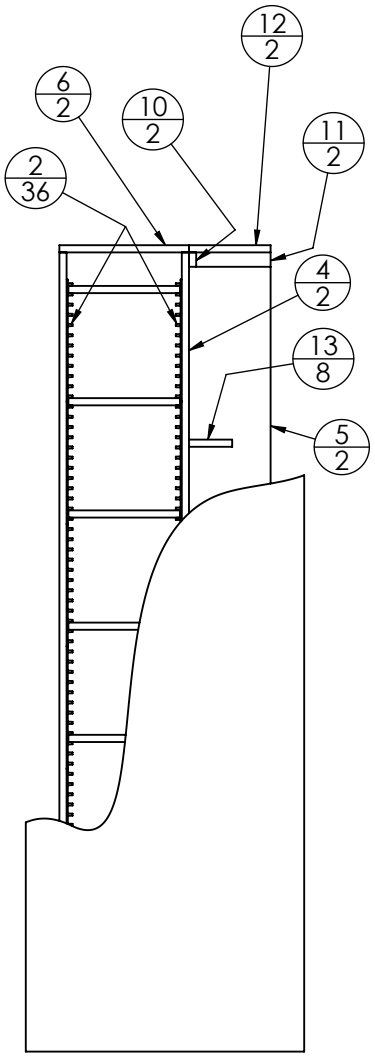


**BILL OF MATERIAL**

| ITEM | QTY | PART NUMBER | Material | CutSize |
|---|---|---|---|---|
| 1 | 1 | Existing Area | | |
| 2 | 36 | EZStudRack | ezstudrack.com | |
| 3 | 2 | V-SUPPORT-01 | 1x6 (3/4"x5 1/2") | 83 1/4" |
| 4 | 2 | V-SUPPORT-02 | 1x6 (3/4"x5 1/2") | 83 1/4" |
| 5 | 2 | V-SUPPORT-03 | 1x10 (3/4"x9 1/4") | 83 1/4" |
| 6 | 2 | TOP-SHELF-01 | 1x6 (3/4"x5 1/2") | 13 1/2" |
| 7 | 1 | TOP-SHELF-02 | 1x10 (3/4"x9 1/4") | 32" |
| 8 | 7 | Back Shelf | 1x10 (3/4"x9 1/4") | 30 1/8" |
| 9 | 14 | Side Shelf | 1x6 (3/4"x5 1/2") | 11 5/8" |
| 10 | 2 | Inner Brace-02 | 3/4"x1 1/2"x4 3/4" | |
| 11 | 2 | Inner Brace-01 | 3/4"x1 1/2"x7 3/4" | |
| 12 | 2 | Corner Support-01 | 3/4"x4 3/4"x8 1/2" | |
| 13 | 8 | Corner Support-02 | 3/4"x4 1/2"x4 1/2" | |
| 14 | 1 | Existing Door | | |

| REV. | DESCRIPTION | DATE | APPROVED | NEXT ASSY | USED ON |
|---|---|---|---|---|---|
| | REVISIONS | | | APPLICATION | |

CONFIDENTIAL

SCALE 1:20

©2007, SEGOVIA SOLUTIONS

UNLESS OTHERWISE SPECIFIED DIMENSIONS ARE IN INCHES
TOLERANCES ARE:
FRACTIONS ±1/16 DECIMALS .XX ± .015 .XXX ± .005 ANGLES ±1/2°

MATERIAL

FINISH

DO NOT SCALE DRAWING

CAD GENERATED DRAWING, DO NOT MANUALLY UPDATE

| APPROVALS | DATE |
|---|---|
| DRAWN E. Segovia | 07/11/07 |
| CHECKED | |
| RESP ENG | |
| MFG ENG | |
| QUAL ENG | |

SEGOVIA SOLUTIONS
205 Heritage Trail North
Bellville, Texas 77418

MOLLOY BEACH HOUSE
PANTRY DESIGN

SIZE A | DWG. NO. Molloy Pantry Beach House | REV.

SCALE | CAD FILE: | SHEET 1 OF 9

THE INFORMATION CONTAINED IN THIS DRAWING IS THE SOLE PROPERTY OF SEGOVIA SOLUTIONS. ANY REPRODUCTION IN PART OR WHOLE WITHOUT THE WRITTEN PERMISSION OF SEGOVIA SOLUTIONS IS PROHIBITED.

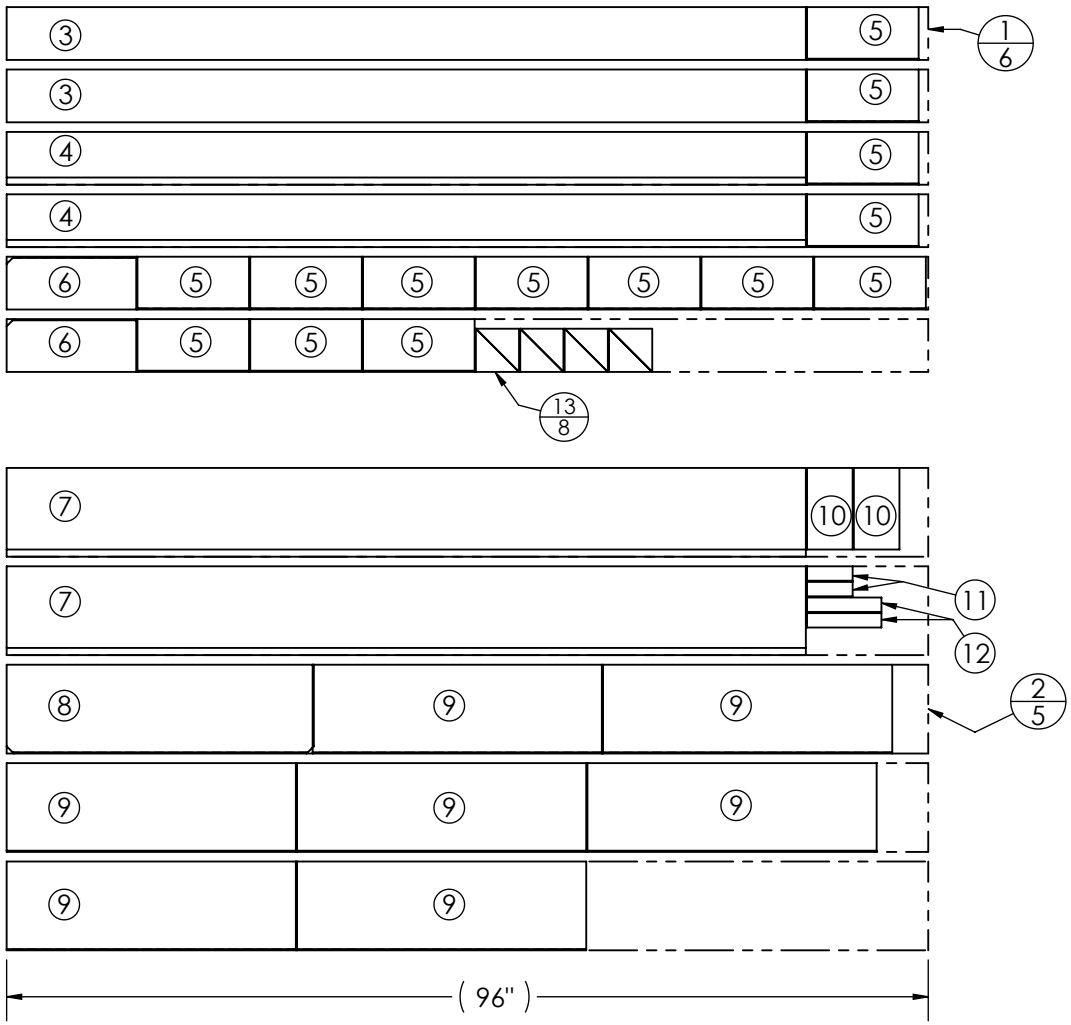


## BILL OF MATERIAL

| ITEM | QTY. | PART NUMBER | Material | CutSize |
|---|---|---|---|---|
| 1 | 6 | 1x6-STOCK | 1x6x8' | PURCHASE |
| 2 | 5 | 1x10-STOCK | 1x10x8' | PURCHASE |
| 3 | 2 | V-SUPPORT-01 | 1x6 (3/4"x5 1/2") | 83 1/4" |
| 4 | 2 | V-SUPPORT-02 | 1x6 (3/4"x5 1/2") | 83 1/4" |
| 5 | 14 | Side Shelf | 1x6 (3/4"x5 1/2") | 11 5/8" |
| 6 | 2 | TOP-SHELF-01 | 1x6 (3/4"x5 1/2") | 13 1/2" |
| 7 | 2 | V-SUPPORT-03 | 1x10 (3/4"x9 1/4") | 83 1/4" |
| 8 | 1 | TOP-SHELF-02 | 1x10 (3/4"x9 1/4") | 32" |
| 9 | 7 | Back Shelf | 1x10 (3/4"x9 1/4") | 30 1/8" |
| 10 | 2 | Corner Support-01 | 3/4"x4 3/4"x8 1/2" | |
| 11 | 2 | Inner Brace-02 | 3/4"x1 1/2"x4 3/4" | |
| 12 | 2 | Inner Brace-01 | 3/4"x1 1/2"x7 3/4" | |
| 13 | 8 | Corner Support-02 | 3/4"x4 1/2"x4 1/2" | |

NOTES:

1. DRAWING FOR REFERENCE ONLY. DIMENSIONS VARY BASED ON APPLICATION USED.

| REV. | DESCRIPTION | DATE | APPROVED | NEXT ASSY | USED ON |
|---|---|---|---|---|---|
| | REVISIONS | | | APPLICATION | |

CONFIDENTIAL

SCALE 1:20

©2007, SEGOVIA SOLUTIONS

UNLESS OTHERWISE SPECIFIED DIMENSIONS ARE IN INCHES
TOLERANCES ARE:
FRACTIONS ±1/16 DECIMALS .XX ± .015 .XXX ± .005 ANGLES ±1/2°

MATERIAL

FINISH

DO NOT SCALE DRAWING

CAD GENERATED DRAWING, DO NOT MANUALLY UPDATE

| APPROVALS | DATE |
|---|---|
| DRAWN E. Segovia | 07/11/07 |
| CHECKED | |
| RESP ENG | |
| MFG ENG | |
| QUAL ENG | |

SEGOVIA SOLUTIONS
205 Heritage Trail North
Bellville, Texas 77418

# CUT LIST/ PURCHASE MATERIAL

SIZE A | DWG. NO. Molloy Pantry Beach House | REV.

SCALE | CAD FILE: | SHEET 2 OF 9

THE INFORMATION CONTAINED IN THIS DRAWING IS THE SOLE PROPERTY OF SEGOVIA SOLUTIONS. ANY REPRODUCTION IN PART OR WHOLE WITHOUT THE WRITTEN PERMISSION OF SEGOVIA SOLUTIONS IS PROHIBITED.

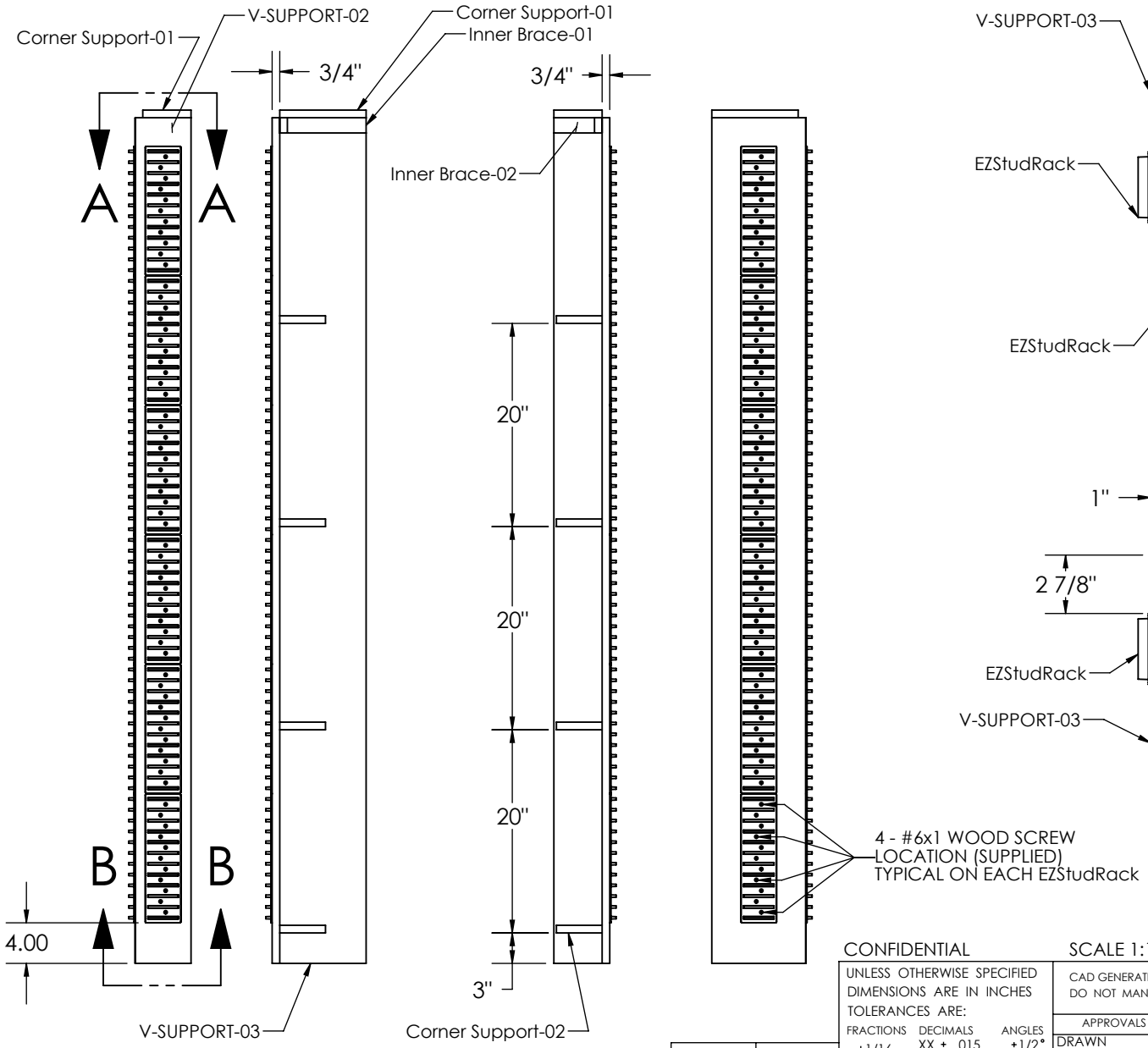


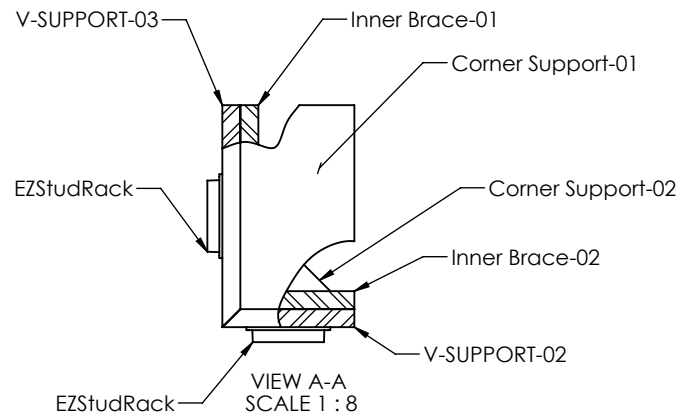


VIEW A-A
SCALE 1 : 8

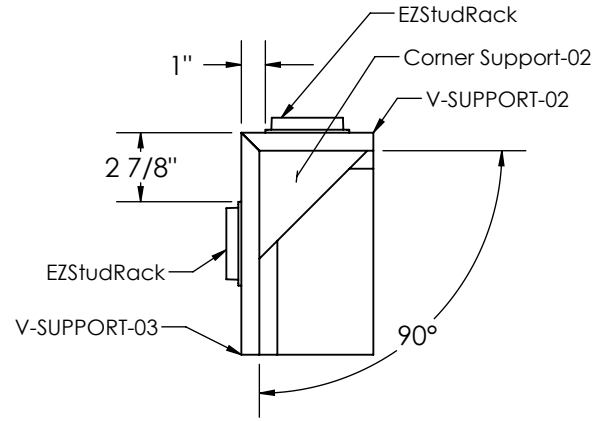


VIEW B-B
SCALE 1 : 8

CONFIDENTIAL

SCALE 1:16

©2007, SEGOVIA SOLUTIONS

UNLESS OTHERWISE SPECIFIED DIMENSIONS ARE IN INCHES
TOLERANCES ARE:
FRACTIONS ±1/16 DECIMALS .XX ± .015 .XXX ± .005 ANGLES ±1/2°

MATERIAL

FINISH

DO NOT SCALE DRAWING

CAD GENERATED DRAWING, DO NOT MANUALLY UPDATE

| APPROVALS | DATE |
|---|---|
| DRAWN E. Segovia | 07/11/07 |
| CHECKED | |
| RESP ENG | |
| MFG ENG | |
| QUAL ENG | |

SEGOVIA SOLUTIONS
205 Heritage Trail North
Bellville, Texas 77418

# RIGHT CORNER ASSEMBLY DETAILS

SIZE A | DWG. NO. Molloy Pantry Beach House | REV.

SCALE | CAD FILE: | SHEET 3 OF 9

| REV. | DESCRIPTION | DATE | APPROVED | NEXT ASSY | USED ON |
|---|---|---|---|---|---|
| | REVISIONS | | | APPLICATION | |

THE INFORMATION CONTAINED IN THIS DRAWING IS THE SOLE PROPERTY OF SEGOVIA SOLUTIONS. ANY REPRODUCTION IN PART OR WHOLE WITHOUT THE WRITTEN PERMISSION OF SEGOVIA SOLUTIONS IS PROHIBITED.

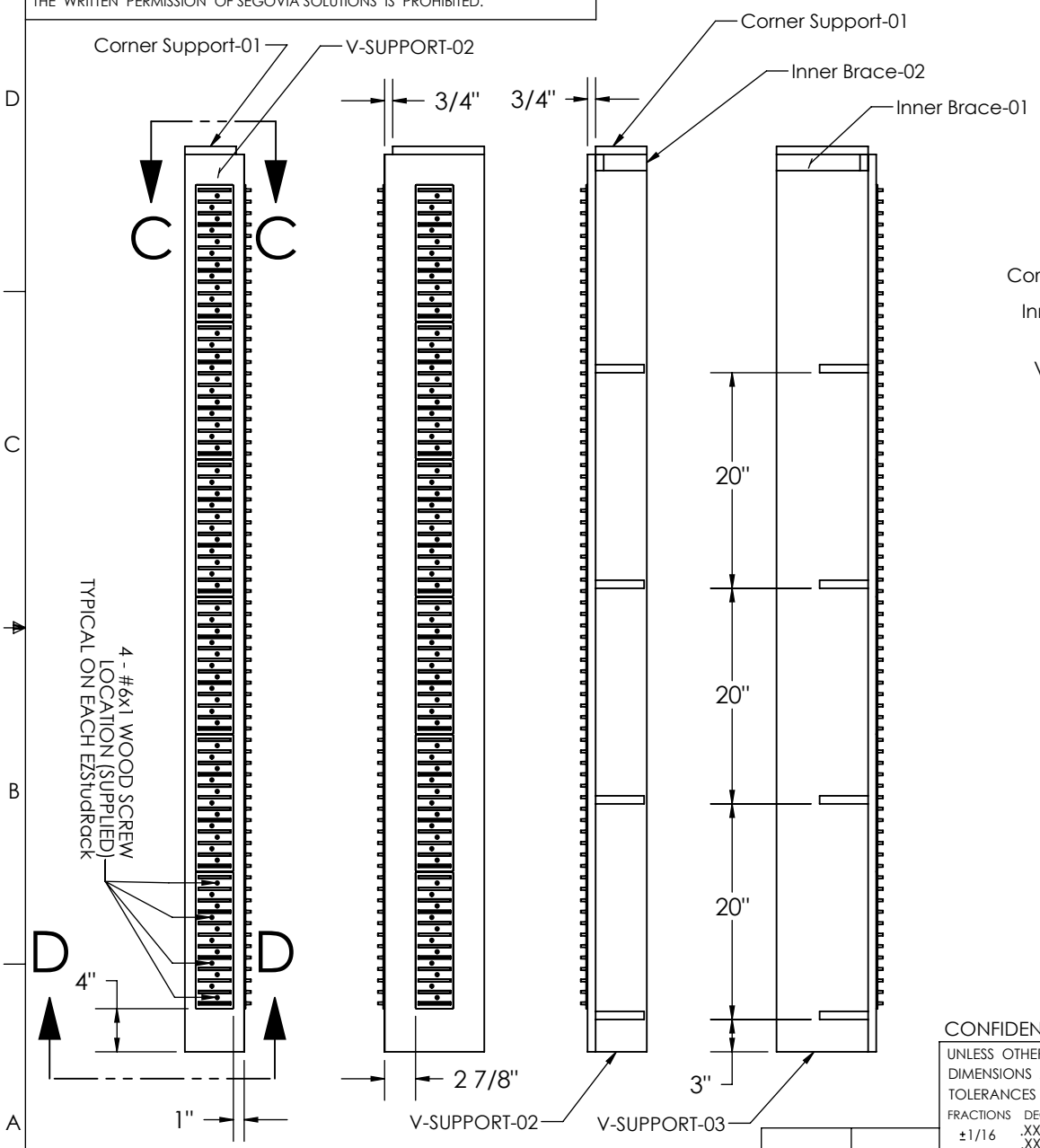


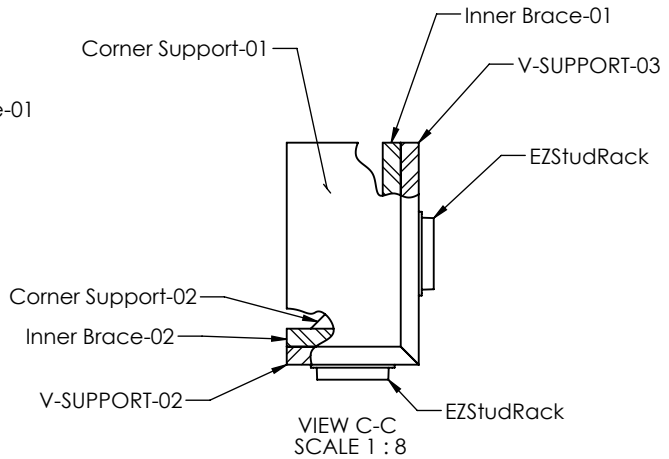


VIEW C-C
SCALE 1 : 8

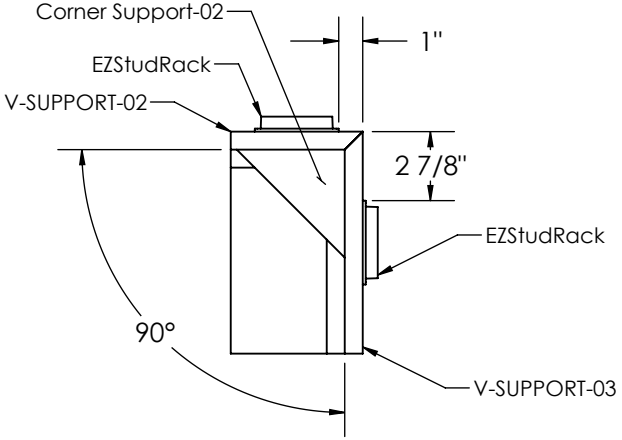


VIEW D-D
SCALE 1 : 8

| REV. | DESCRIPTION | DATE | APPROVED | NEXT ASSY | USED ON |
|---|---|---|---|---|---|
| | REVISIONS | | | APPLICATION | |

CONFIDENTIAL

UNLESS OTHERWISE SPECIFIED DIMENSIONS ARE IN INCHES
TOLERANCES ARE:
FRACTIONS ±1/16 DECIMALS .XX ± .015 .XXX ± .005 ANGLES ±1/2°

MATERIAL

FINISH

DO NOT SCALE DRAWING

SCALE 1:16

CAD GENERATED DRAWING, DO NOT MANUALLY UPDATE

| APPROVALS | DATE |
|---|---|
| DRAWN E. Segovia | 07/11/07 |
| CHECKED | |
| RESP ENG | |
| MFG ENG | |
| QUAL ENG | |

©2007, SEGOVIA SOLUTIONS

SEGOVIA SOLUTIONS
205 Heritage Trail North
Bellville, Texas 77418

# LEFT CORNER ASSEMBLY DETAILS

SIZE A | DWG. NO. Molloy Pantry Beach House | REV.
SCALE | CAD FILE: | SHEET 4 OF 9

THE INFORMATION CONTAINED IN THIS DRAWING IS THE SOLE PROPERTY OF SEGOVIA SOLUTIONS. ANY REPRODUCTION IN PART OR WHOLE WITHOUT THE WRITTEN PERMISSION OF SEGOVIA SOLUTIONS IS PROHIBITED.

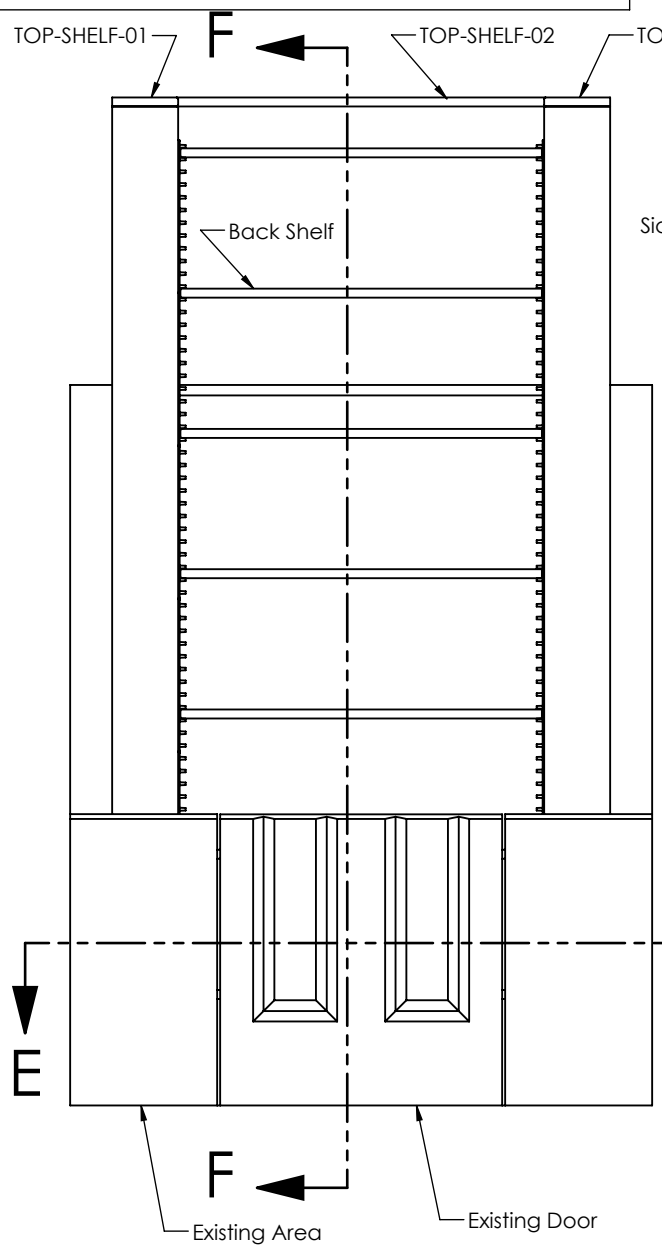


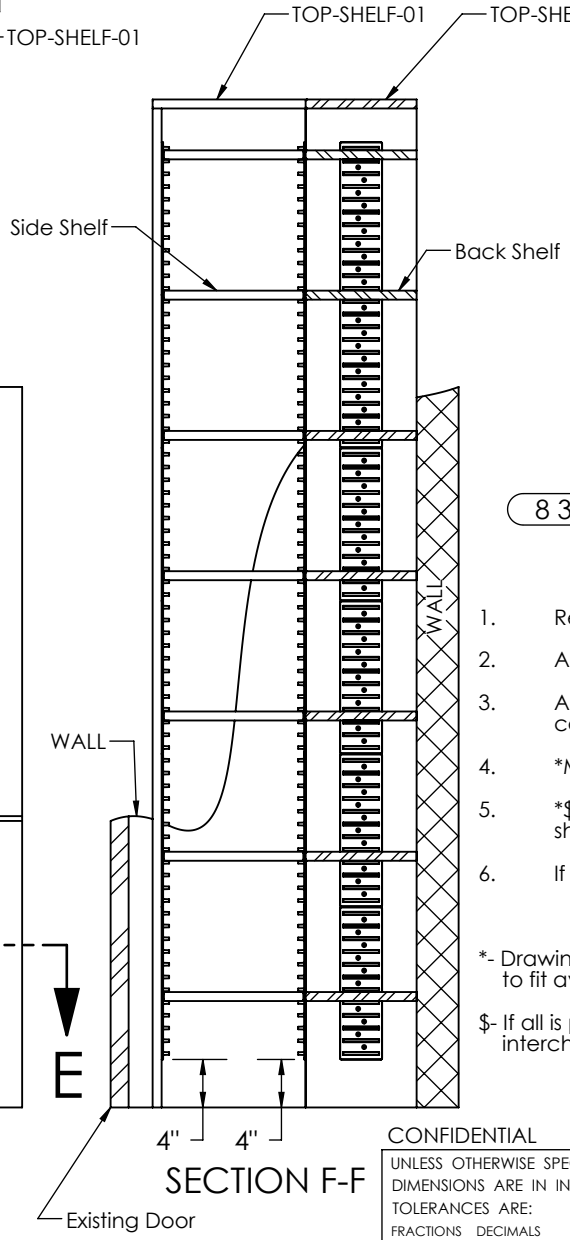


SECTION F-F

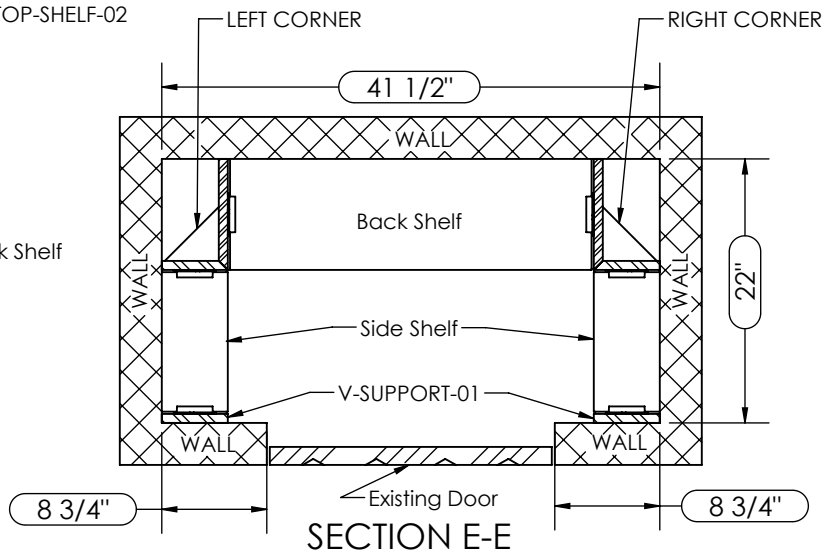


SECTION E-E

1. Remove existing shelving and base boards. Prime and paint if necessary.
2. Attach left and right corner sections making sure they are plum and level.
3. Attach V-SUPPORT-01 boards. If studs are not available, liquid nails can be used.
4. *Measure available area, cut and insert TOP-SHELF-01 & TOP-SHELF-02.
5. *$Measure available area, cut and insert Side and Back Shelves. Cut shelves 1/8" less than measured distance. This allows shelves to easily adjust.
6. If Painting is desired, prime and paint prior to installing the EZStudRacks.

*- Drawing dimensions are for reference only. Make necessary adjustments to fit available area.

$- If all is plum and level, all ADJUSTABLE SHELVES should be the same & can be interchanged throught.

| REV. | DESCRIPTION | DATE | APPROVED | NEXT ASSY | USED ON |
|---|---|---|---|---|---|
| | REVISIONS | | | APPLICATION | |

CONFIDENTIAL

UNLESS OTHERWISE SPECIFIED DIMENSIONS ARE IN INCHES
TOLERANCES ARE:
FRACTIONS ±1/16 DECIMALS .XX ± .015 .XXX ± .005 ANGLES ±1/2°

MATERIAL

FINISH

DO NOT SCALE DRAWING

SCALE 1:16

CAD GENERATED DRAWING, DO NOT MANUALLY UPDATE

| APPROVALS | DATE |
|---|---|
| DRAWN E. Segovia | 07/11/07 |
| CHECKED | |
| RESP ENG | |
| MFG ENG | |
| QUAL ENG | |

©2007, SEGOVIA SOLUTIONS

SEGOVIA SOLUTIONS
205 Heritage Trail North
Bellville, Texas 77418

# Assembly Details

SIZE A | DWG. NO. Molloy Pantry Beach House | REV.

SCALE | CAD FILE: | SHEET 5 OF 9

THE INFORMATION CONTAINED IN THIS DRAWING IS THE SOLE PROPERTY OF SEGOVIA SOLUTIONS. ANY REPRODUCTION IN PART OR WHOLE WITHOUT THE WRITTEN PERMISSION OF SEGOVIA SOLUTIONS IS PROHIBITED.

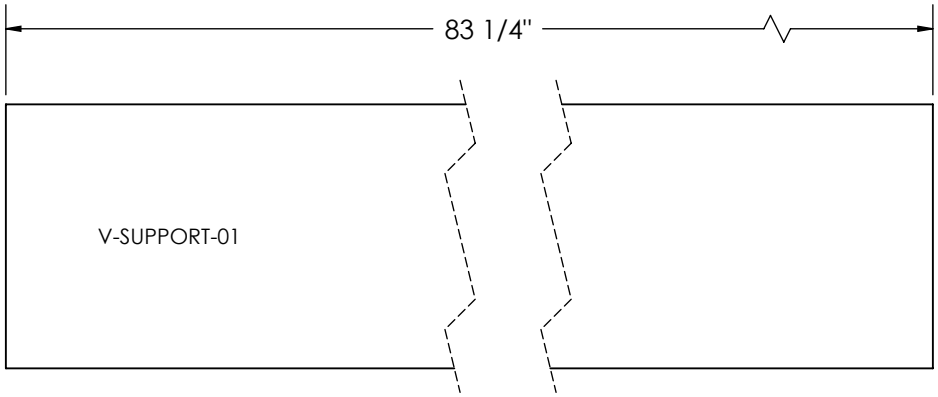


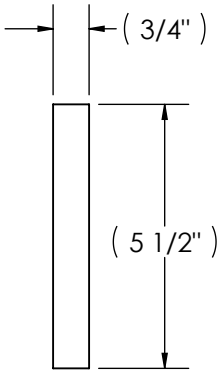


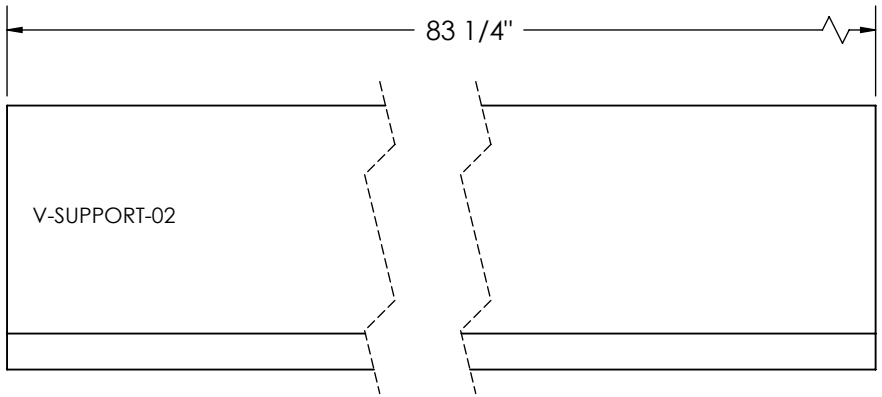


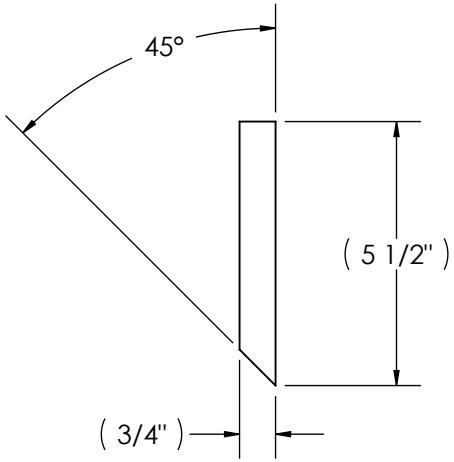


NOTES:

1. DRAWING FOR REFERENCE ONLY. DIMENSIONS VARY BASED ON APPLICATION USED.

| REV. | DESCRIPTION | DATE | APPROVED | NEXT ASSY | USED ON |
|---|---|---|---|---|---|
| | REVISIONS | | | APPLICATION | |

CONFIDENTIAL

UNLESS OTHERWISE SPECIFIED DIMENSIONS ARE IN INCHES
TOLERANCES ARE:
FRACTIONS ±1/16 DECIMALS .XX ± .015 .XXX ± .005 ANGLES ±1/2°

MATERIAL

FINISH

DO NOT SCALE DRAWING

SCALE 1:4

CAD GENERATED DRAWING, DO NOT MANUALLY UPDATE

| APPROVALS | DATE |
|---|---|
| DRAWN E. Segovia | 07/11/07 |
| CHECKED | |
| RESP ENG | |
| MFG ENG | |
| QUAL ENG | |

©2007, SEGOVIA SOLUTIONS

SEGOVIA SOLUTIONS
205 Heritage Trail North
Bellville, Texas 77418

# Board Details (Reference Only)

SIZE A | DWG. NO. Molloy Pantry Beach House | REV.

SCALE | CAD FILE: | SHEET 6 OF 9

THE INFORMATION CONTAINED IN THIS DRAWING IS THE SOLE PROPERTY OF SEGOVIA SOLUTIONS. ANY REPRODUCTION IN PART OR WHOLE WITHOUT THE WRITTEN PERMISSION OF SEGOVIA SOLUTIONS IS PROHIBITED.

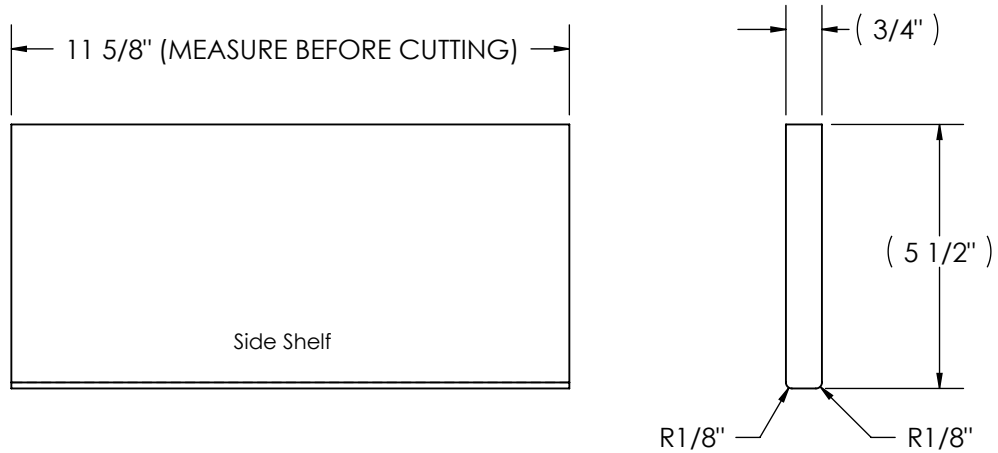


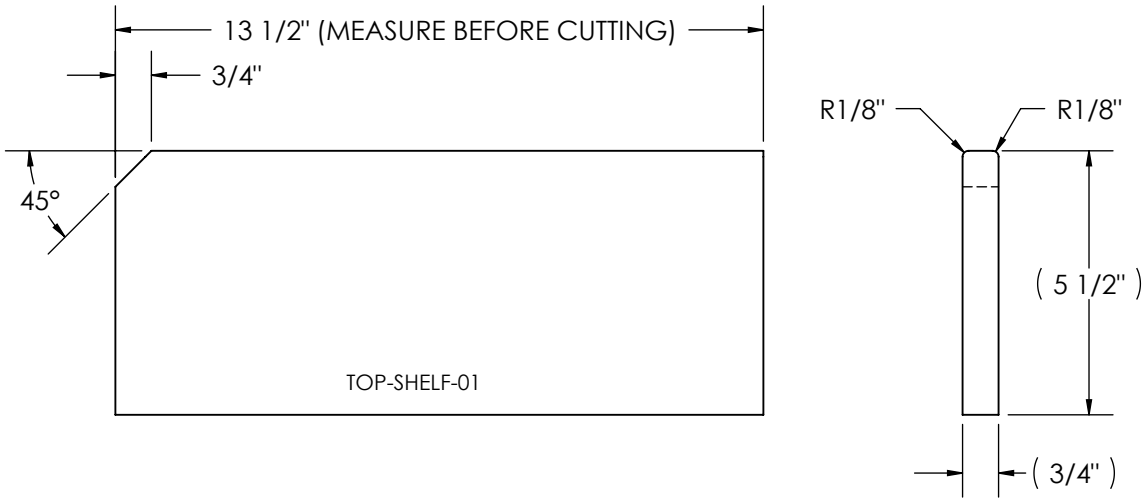


NOTES:

1. DRAWING FOR REFERENCE ONLY. DIMENSIONS VARY BASED ON APPLICATION USED.

| REV. | DESCRIPTION | DATE | APPROVED | NEXT ASSY | USED ON |
|---|---|---|---|---|---|
| | REVISIONS | | | APPLICATION | |

CONFIDENTIAL

UNLESS OTHERWISE SPECIFIED DIMENSIONS ARE IN INCHES
TOLERANCES ARE:
FRACTIONS ±1/16 DECIMALS .XX ± .015 .XXX ± .005 ANGLES ±1/2°

MATERIAL

FINISH

DO NOT SCALE DRAWING

SCALE 1:4

CAD GENERATED DRAWING, DO NOT MANUALLY UPDATE

| APPROVALS | DATE |
|---|---|
| DRAWN E. Segovia | 07/11/07 |
| CHECKED | |
| RESP ENG | |
| MFG ENG | |
| QUAL ENG | |

©2007, SEGOVIA SOLUTIONS

SEGOVIA SOLUTIONS
205 Heritage Trail North
Bellville, Texas 77418

# Board Details (Reference Only)

SIZE A | DWG. NO. Molloy Pantry Beach House | REV.

SCALE | CAD FILE: | SHEET 7 OF 9

THE INFORMATION CONTAINED IN THIS DRAWING IS THE SOLE PROPERTY OF SEGOVIA SOLUTIONS. ANY REPRODUCTION IN PART OR WHOLE WITHOUT THE WRITTEN PERMISSION OF SEGOVIA SOLUTIONS IS PROHIBITED.

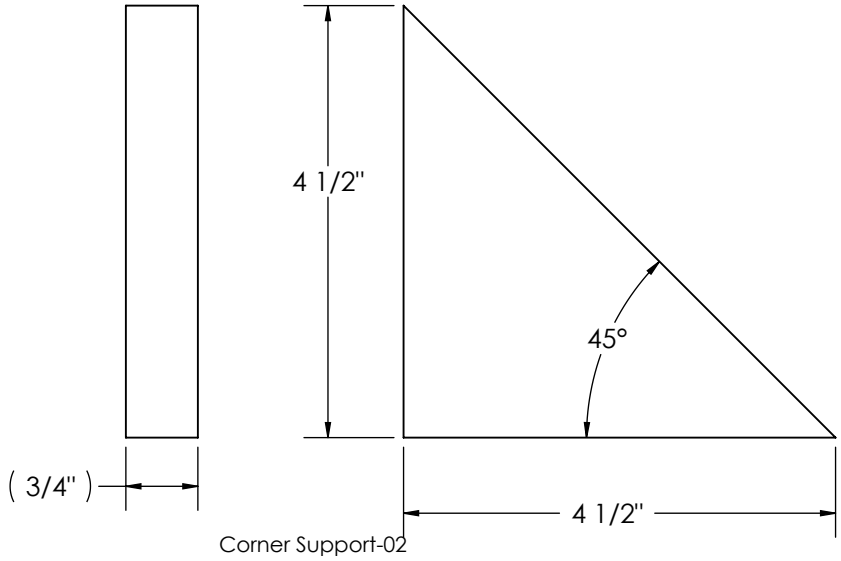


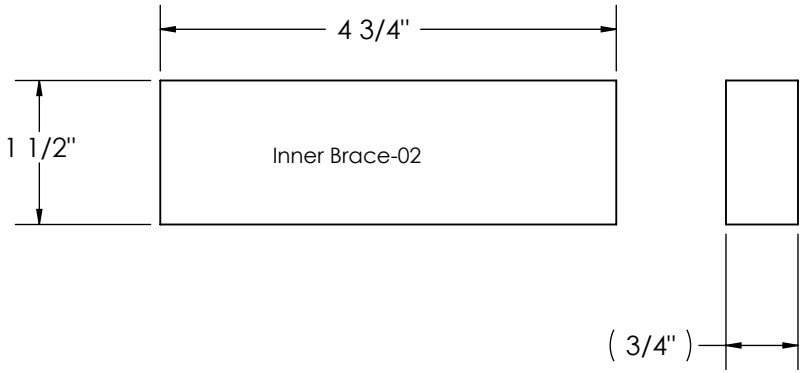


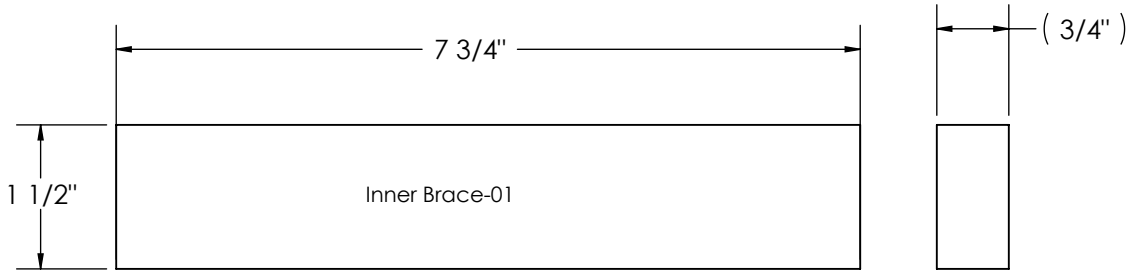


NOTES:

1. DRAWING FOR REFERENCE ONLY. DIMENSIONS VARY BASED ON APPLICATION USED.

| REV. | DESCRIPTION | DATE | APPROVED | NEXT ASSY | USED ON |
|---|---|---|---|---|---|
| | REVISIONS | | | APPLICATION | |

CONFIDENTIAL

UNLESS OTHERWISE SPECIFIED DIMENSIONS ARE IN INCHES
TOLERANCES ARE:
FRACTIONS ±1/16 DECIMALS .XX ± .015 .XXX ± .005 ANGLES ±1/2°

MATERIAL

FINISH

DO NOT SCALE DRAWING

SCALE 1:2

CAD GENERATED DRAWING, DO NOT MANUALLY UPDATE

| APPROVALS | DATE |
|---|---|
| DRAWN E. Segovia | 07/11/07 |
| CHECKED | |
| RESP ENG | |
| MFG ENG | |
| QUAL ENG | |

©2007, SEGOVIA SOLUTIONS

SEGOVIA SOLUTIONS
205 Heritage Trail North
Bellville, Texas 77418

# Board Details (Reference Only)

SIZE A | DWG. NO. Molloy Pantry Beach House | REV.

SCALE | CAD FILE: | SHEET 8 OF 9

THE INFORMATION CONTAINED IN THIS DRAWING IS THE SOLE PROPERTY OF SEGOVIA SOLUTIONS. ANY REPRODUCTION IN PART OR WHOLE WITHOUT THE WRITTEN PERMISSION OF SEGOVIA SOLUTIONS IS PROHIBITED.

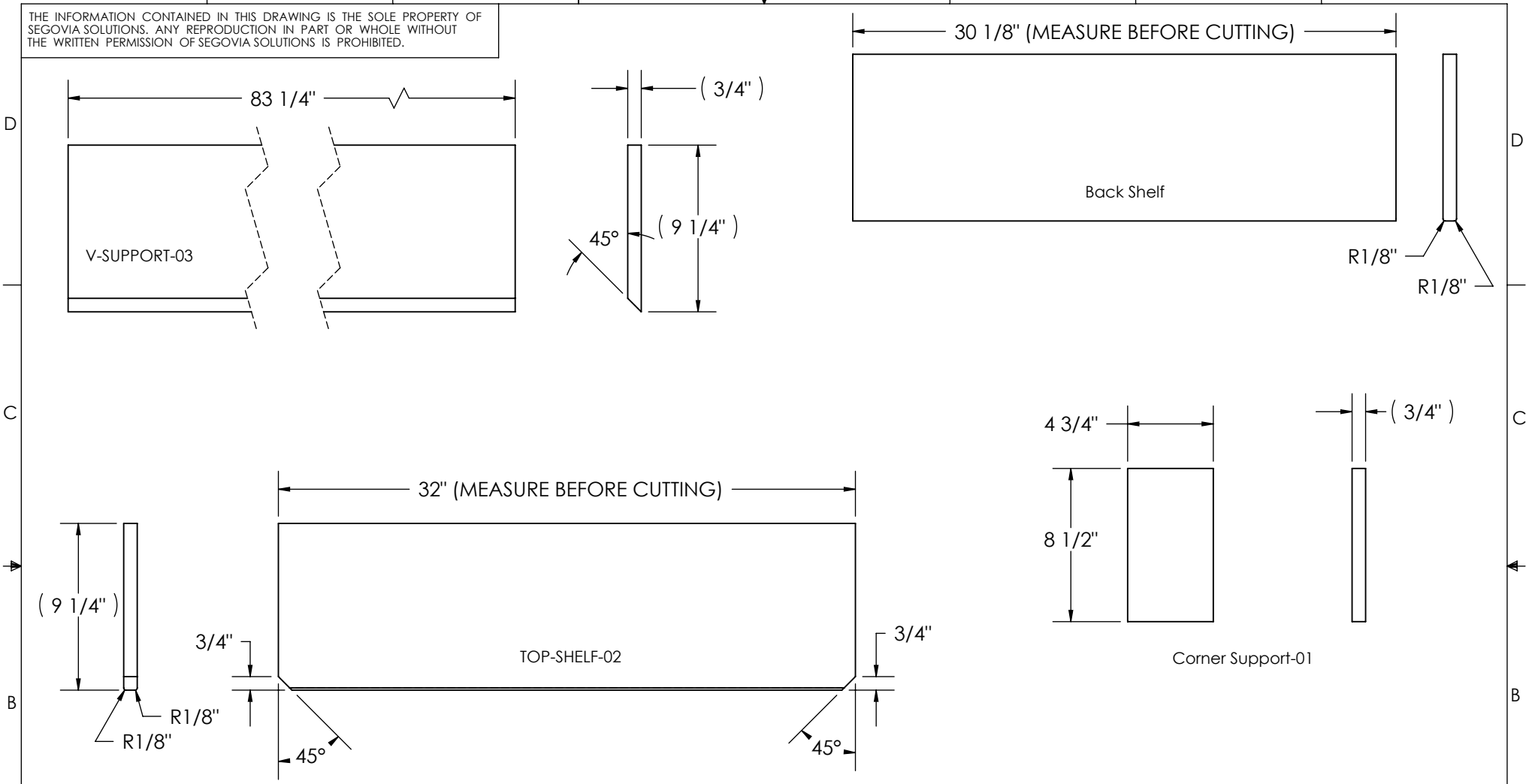


NOTES:

1. DRAWING FOR REFERENCE ONLY. DIMENSIONS VARY BASED ON APPLICATION USED.

| REV. | DESCRIPTION | DATE | APPROVED | NEXT ASSY | USED ON |
|---|---|---|---|---|---|
| | REVISIONS | | | APPLICATION | |

CONFIDENTIAL

UNLESS OTHERWISE SPECIFIED DIMENSIONS ARE IN INCHES
TOLERANCES ARE:
FRACTIONS ±1/16 DECIMALS .XX ± .015 .XXX ± .005 ANGLES ±1/2°

MATERIAL

FINISH

DO NOT SCALE DRAWING

SCALE 1:8

CAD GENERATED DRAWING, DO NOT MANUALLY UPDATE

| APPROVALS | DATE |
|---|---|
| DRAWN E. Segovia | 07/11/07 |
| CHECKED | |
| RESP ENG | |
| MFG ENG | |
| QUAL ENG | |

©2007, SEGOVIA SOLUTIONS

SEGOVIA SOLUTIONS
205 Heritage Trail North
Bellville, Texas 77418

# Board Details (Reference Only)

SIZE A | DWG. NO. Molloy Pantry Beach House | REV.

SCALE | CAD FILE: | SHEET 9 OF 9