SR135 Symmetrical Semi-Solid Engine Mounts

996/997 GT3/GT2/TT

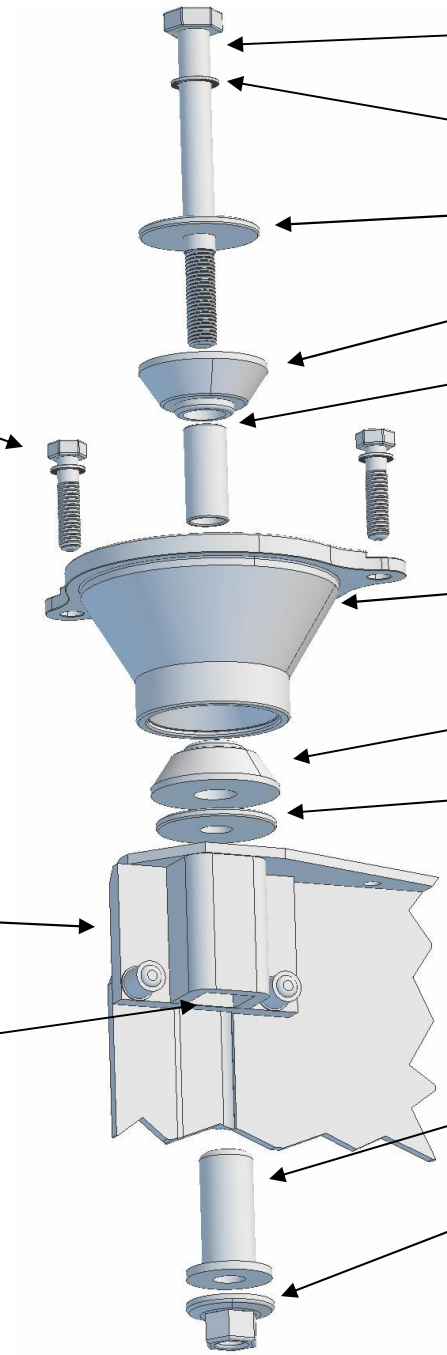

Please note that this surface may need to be debured, dressed, or filed in order to accept the SR135 Centering Sleeve.

1051 Carriage Hills Parkway
Annapolis, MD 21401
(410)571-9779

www.STOMSKIRACING.com