SR017 Symmetrical Semi-Solid Transmission Mounts

911/901/930

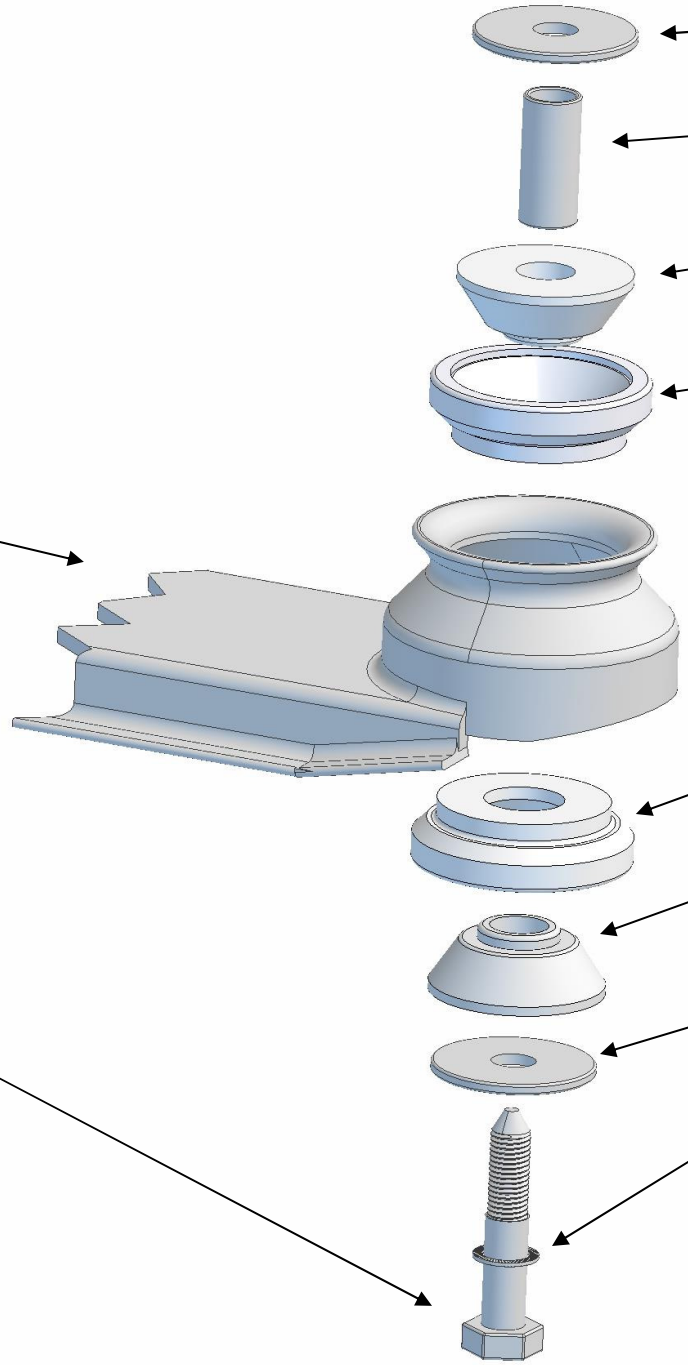

1051 Carriage Hills Parkway
Annapolis, MD 21401
(410)571-9779

www.STOMSKIRACING.com