Vinnova Alicante Vanity Collection 701448-MG-SMB

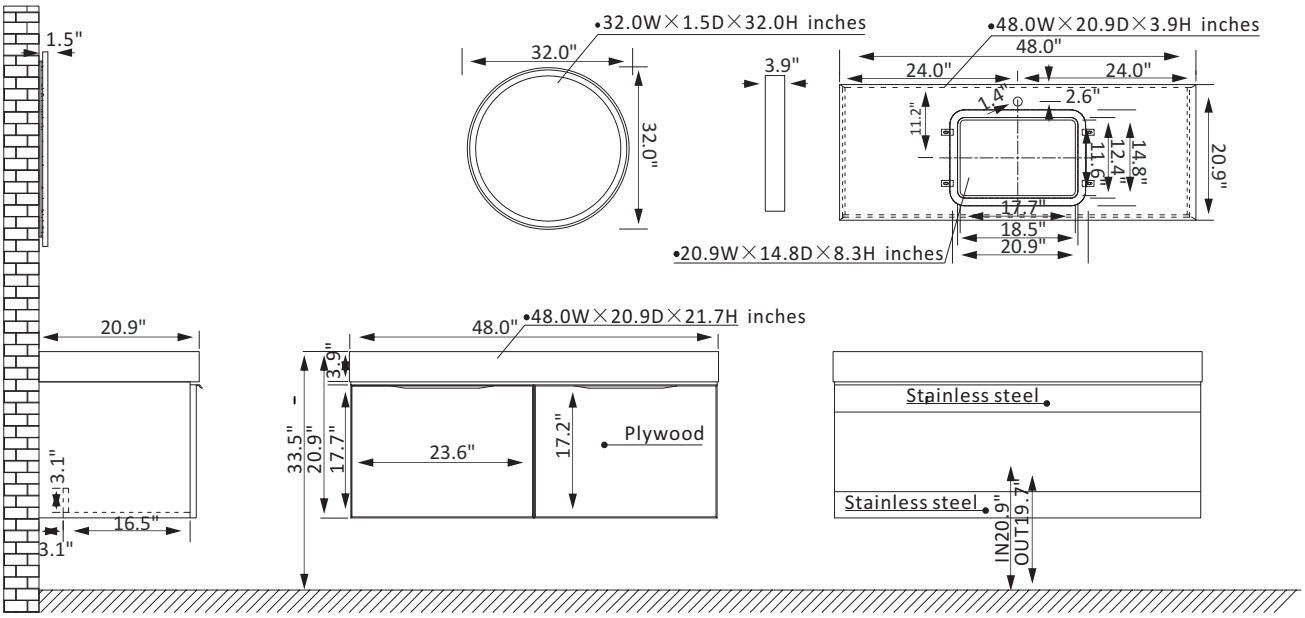

Features

Rugged stainless-steel cabinet construction with solid wood surface.
Available in Classic Blue or Elegant Grey finish to complement your décor.
Snow mountain-white stone top with beautiful natural veining.
2 soft-close, Superior quality hardware with large capacity wall with guardrail drawers to hold towels and toiletries.
Brushed gold-finish hardware lends a touch of style and opulence.
White rectangular ceramic undermount sink with overflow included.
Single, circular LED mirror coordinates perfectly with vanity.
Pre-drilled and designed for easy plumbing and faucet installation.

* Does not include faucet, drain assembly, P-trap and backsplash

VINNOVA
FASHION BATHROOM LIFE