TEL (03) 9290 9813
INFO@FLUIDFLO.COM.AU
WWW.FLUIDFLO.COM.AU

MT Series Solenoid Valve

Specifications

Temperature Range:	-10°C to +50°C
Actuation Function:	3/2 way
Electrical Function:	Single / Spring return
Port Size:	¼" BSP
Weather Rating:	IP65 (min)
Power Consumption:	DC: 4.8W
Duty factor:	100%ED

Features

- 3/2 configuration.
- Manual override.
- Interchangeable multi voltage coil.
- Stainless-steel fasteners included.
- LED plug for power on indication.
- Interchangeable DIN plug.
- Anodized body for superior protection.
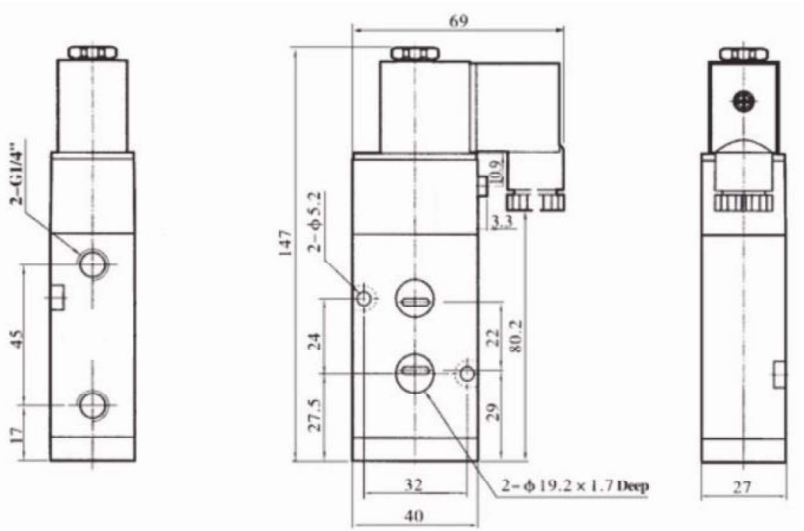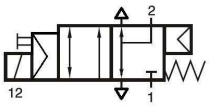
Dimensions (mm) **MT NAMUR- 3/2 -G-1/4, 24VDC**