EVOFOX

ELITE X PC

WIRELESS GAMEPAD

QUICK START GUIDE

EVOFOX

PLAY WITH POWER

PRODUCT OVERVIEW

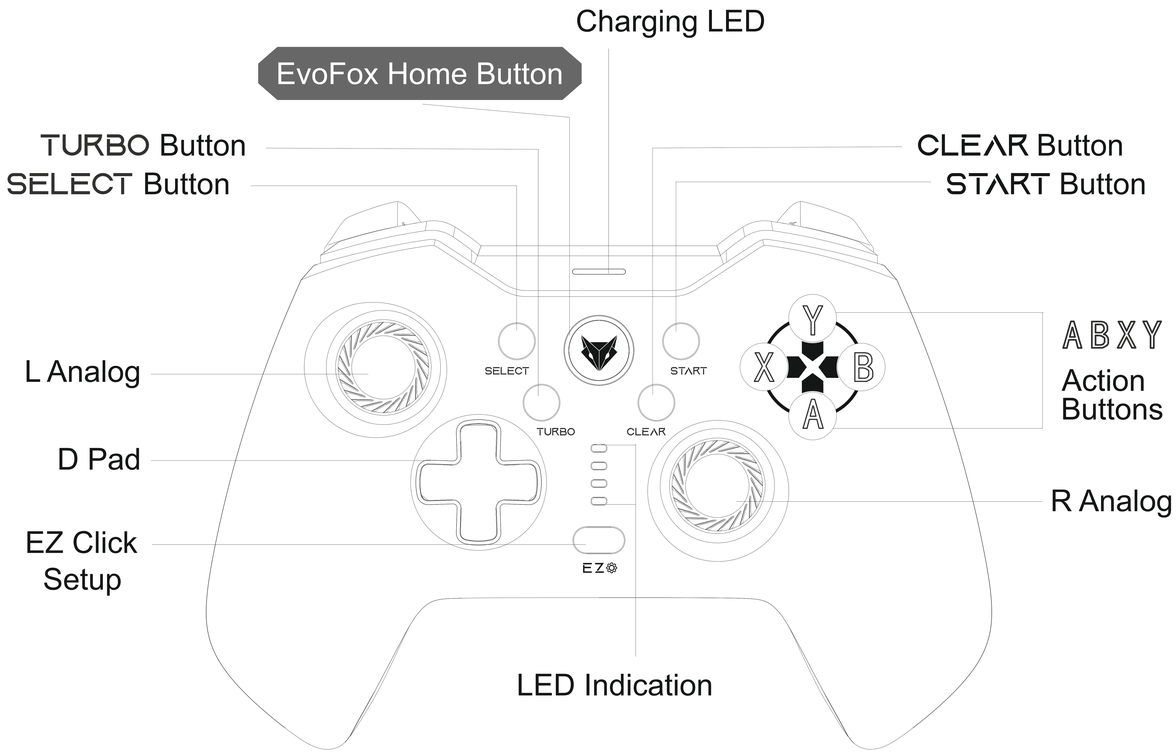

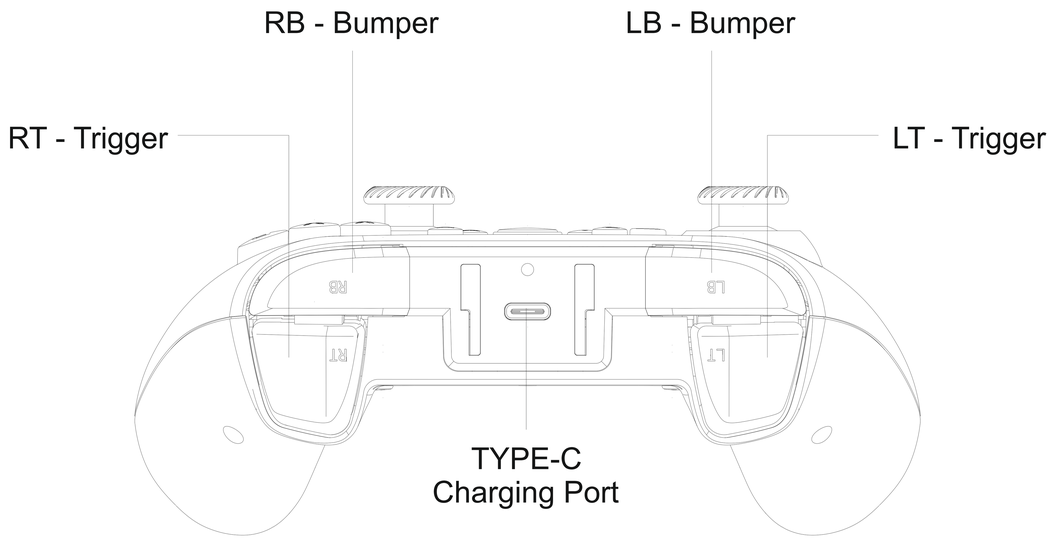

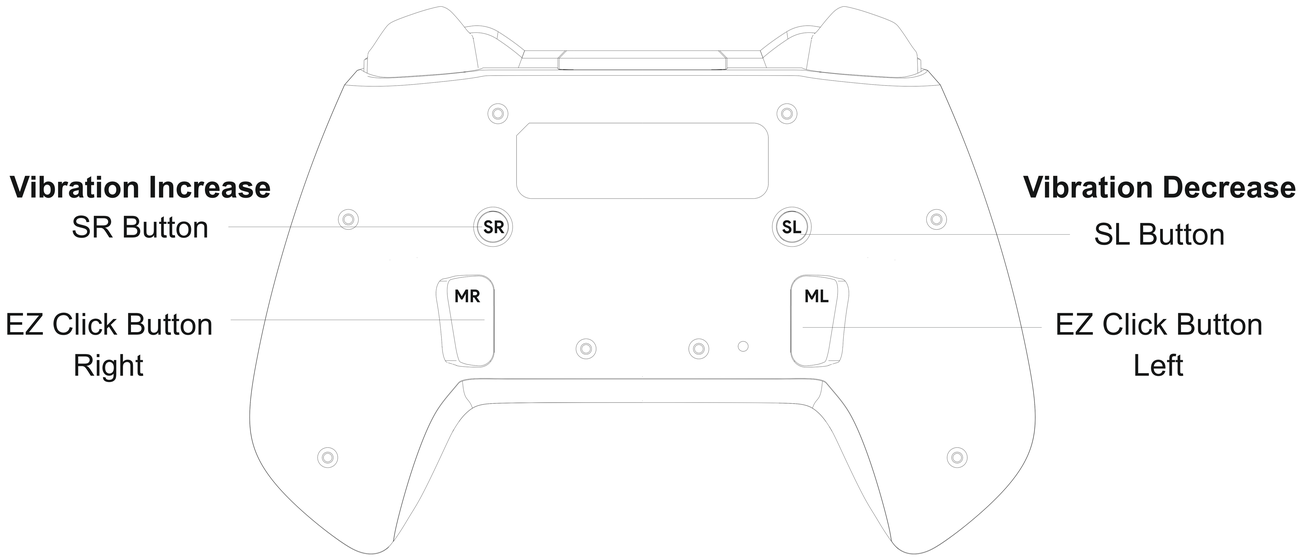

POWER ON

PRESS THE EVOFOX BUTTON

FIRST USE

THE FIRST USE MAY REQUIRE TO RESET THE GAMEPAD

POWER OFF

1. SLEEP AFTER 60 SEC OF DISCONNECTION.
2. TURNS OFF AFTER 5 MIN OF NO ACTION.

CONNECTED

Stable

NOT CONNECTED

Blinking

IN THE BOX

Wireless Gamepad

Charging Cable

USB Extender Cable

Docs

USB Receiver

CHARGING THE GAMEPAD

CHARGING
BLINKING LED

FULLY CHARGED
LED OFF

ENSURE GAMEPAD IS FULLY CHARGED BEFORE FIRST USE

SETUP THE GAMEPAD

COMPATIBILITY – SUPPORTED WINDOWS VERSION ➡ Windows 7, 8, 10,11

1. Connect the USB Receiver in a free USB port on your PC
2. Press the EvoFox button to turn the Gamepad ON

GAMEPAD ALWAYS STARS IN X-INPUT MODE

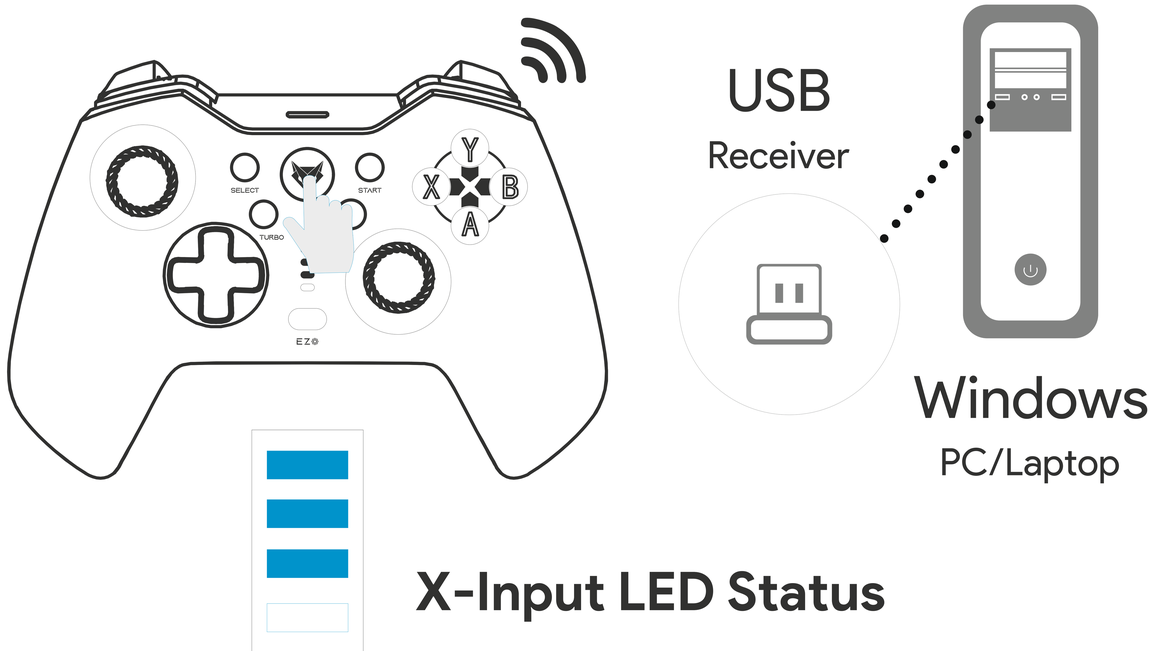

FIRST TIME SETUP MAY REQUIRE A PRESS OF THE RESET BUTTON AFTER PLUGGING IN THE USB RECEIVER.

CHANGING MODES IN WINDOWS PC

X-Input <-> D-Input

Long Press EvoFox **Button,** until the LED indicators change.

X-Input LED Status

D-Input LED Status

EASY CLICK SETUP (MACROS)

1 **Enter EASY CLICK Setup**

Long Press EZ ⚙ + EZ Click R or EZ Click L Button

+

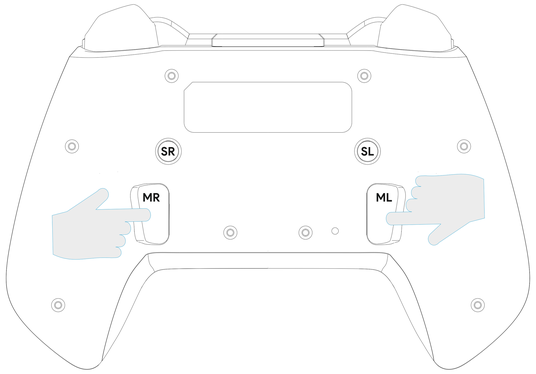

Blinking

2 Setup the MACRO using following buttons

3 Now Press EZ Click R or EZ Click L button to exit the MACRO Set Up.

1. TWO BUTTONS CAN NOT BE USED IN COMBINATION
2. UP TO 8 BUTTONS CAN BE USED TO CREATE THE MACRO

4 **CLEAR MACRO'S**

Long Press EZ ⚙ Button, to clear the MACRO Until the LED Flashes and Gamepad Vibrates.

Your MACRO is now cleared.

TURBO SETTINGS

1 Enter the TURBO Speed Function:

ENABLE: Press the TURBO button and one of the following buttons.

DISABLE: Press Clear + Button to which TURBO is assigned.

2 Adjust TURBO Speed:

Press the TURBO button with the DPAD to increase or decrease the turbo speed.

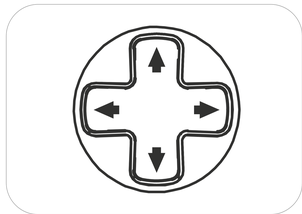

3 Clear ALL TURBO Setting:

Long Press Turbo Button until the Gamepad Vibrates

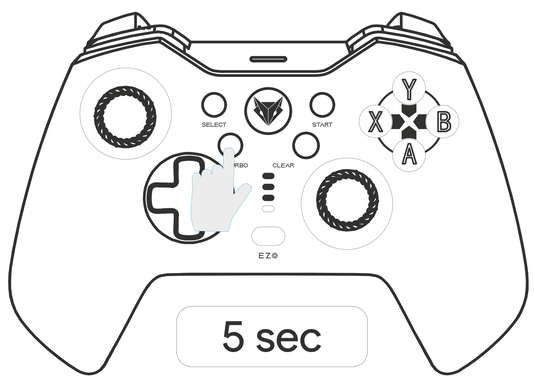

CHANGING VIBRATION LEVELS

Once Connected

Press SR Button to Increase Vibration

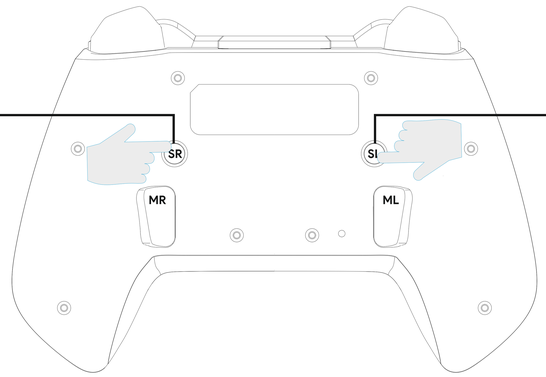

Press SL Button to Decrease Vibration

LED STATUS

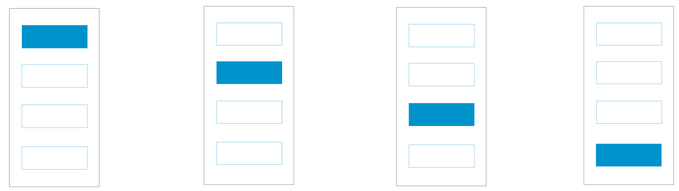

High Virbration	Medium Virbration	Low Virbration	No Virbration

THERE ARE 4 LEVELS TO ADJUST THE VIBRATION

ENHANCE JOYSTICK PRECISION

Enable Joystick Precision

Press EZ ⚙ + LEFT JOYSTICK

Disable Joystick Precision

Again Press EZ ⚙ + LEFT JOYSTICK

RESET THE GAMEPAD

In the unlikely event the Gamepad is not responsive, use a pin to press the RESET button located at the back.

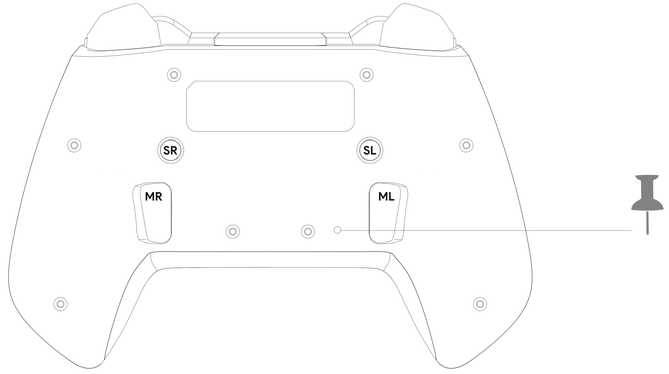

TROUBLESHOOTING

Why is the Gamepad not being detected by my computer?

- Make sure the computer USB port is working. Try a different USB Port.

Why is the Gamepad Disconnecting?

- Make sure your Gamepad is fully charged.
- Ensure clear line of sight while using the Gamepad.
- Depending on your setup you may need to use a USB Extender Cable.

Why is the Gamepad not working in all my games?

- Ensure that the game has support for Gamepads.
- Set the Gamepad mode to D-Input and try again.

Why is the Gamepad not vibrating?

- Not all Games have vibration or the vibration setting needs to be turned on (in the game).

SPECIFICATIONS

Working Platforms	:	Windows 7 and Above	**Connection Types**	:	Wireless
Working Modes	:	PC – X-Input / D-Input	**Charging Time**	:	~ 2-2.5 hrs
Play Time	:	~ 8 hrs	**Working Distance**	:	10 Feet
			Net weight	:	220g

WARRANTY STATEMENT

Amkette EvoFox Elite X PC Wireless Gamepad is backed by a 1 year performance warranty against any manufacturing defects in material or workmanship from the date of original purchase. This warranty entitles the purchaser to get the product repaired or replaced under the following conditions:

- The warranty applies to the original purchaser. Proof of original purchase is required.
- The warranty does not cover the damage caused by misuse, abuse or improper storage.
- In no event shall Amkette be responsible for any direct, incidental, consequential or other damages of any kind.

Please contact our Technical Support Line and/or send the defective product, postage pre-paid, together with the proof of purchase to our Customer Care Service Center to avail warranty service. Return postage will be paid by us.

CUSTOMER CARE SERVICE CENTER

Amkette House, C-64/4, Okhla, Phase-II, New Delhi-110020

1800-11-9090 (Toll Free) (9:30 AM - 6:00 PM)

+91 9312691448 (9:30 AM - 6:00 PM)

techsupport@amkette.in

FOR HASSLE FREE SERVICE REGISTER YOUR PRODUCT AT **WWW.AMKETTE.COM/REGISTER**