FASTBACK MANUAL

2x72 Belt Grinder Setup, Maintenance and Troubleshooting

AmeriBrade

AmeriBrade LLC
Rev-A6 09/13/2022

AmeriBrade

Contents

1. Assemble the Pedestal Stand if you ordered one. Skip to Step 2 if you did not order a Pedestal Stand.

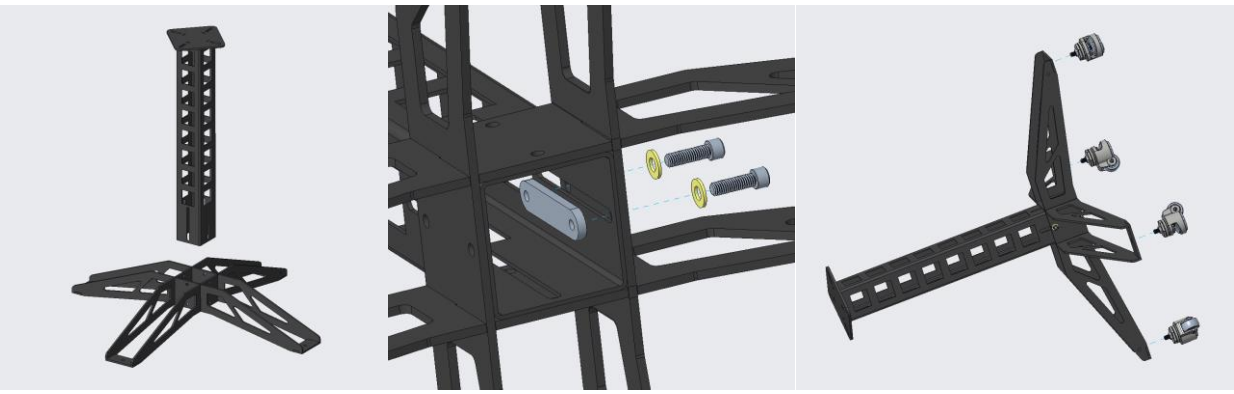

   a. Hardware and feet will be included in a small white box labeled as follows:

Caster Pedestal Kit
Qty 4: Leveling Casters
Qty 4: Threaded Bars
Qty 8: 3/8 Cap Screws
Qty 8: 3/8 Washers
Qty 1: 3/8 Carriage Bolt Kit

   b. The 3/8 cap screws require a 5/16 allen wrench
   c. The leveling casters use a ¾ wrench or socket
   d. Watch this video to see more details about Pedestal Stand Assembly:

https://youtu.be/lMoHw2YIHoQ

2. Mount the Horizontal Mount to your bench top or Pedestal Stand. If you did not order a Horizontal Mount, Skip to Step 3.

a. Where to find the Hardware:
   i. <u>Bench top mounting</u>: If you are mounting the Horizontal Mount to your own platform, you will need to provide the appropriate length hardware based on the thickness of your mounting surface. Use 3/8” diameter carriage bolts. (The hardware that is plastic wrapped to the horizontal mount will be for Step 3)
   ii. <u>Pedestal Stand mounting</u>: the hardware can be found with the rest of the pedestal hardware in a small bag labeled as follows:

<u>3/8 Carriage Bolt Kit</u>

Used for Mounting:

Grinder to Horizontal Mount <u>or</u>
Horizontal Mount to Pedestal <u>or</u>
Grinder to Pedestal

b. The carriage bolts should be installed from the top and the nuts installed from the bottom.
c. Orientation: All 4 sides of the pedestal pillar are the same, so it doesn’t matter which way you decide to mount the horizontal mount to the pillar.

d. Watch this video to see more details about mounting the horizontal mount:

https://youtu.be/mKhuXaMESCc?t=1276

3. Mount the Grinder Frame to your bench top, or your Pedestal Stand, or your Horizontal mount (whichever is applicable).

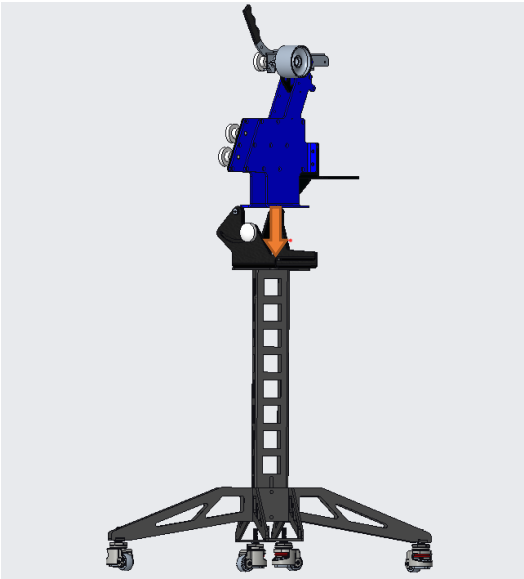

a. Where to find the hardware:
   i. <u>Bench Top</u>: If you are mounting the grinder to your own platform, you will need to provide the appropriate length hardware based on the thickness of your mounting surface. We suggest 3/8" diameter fasteners.
   ii. <u>Direct to Pedestal Stand (no horizontal mount)</u>: the hardware can be found with the rest of the pedestal hardware in a small bag labeled as follows:

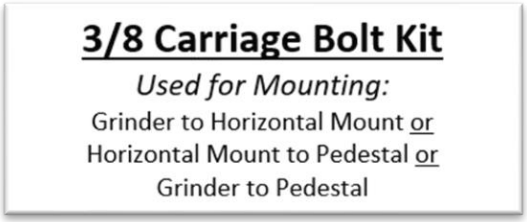

      1. <u>Orientation</u>: All 4 sides of the pedestal pillar are the same, so it doesn't matter which way you decide to mount the grinder to the pillar.

   iii. <u>Horizontal Mount:</u> the hardware will be plastic wrapped to the Horizontal Mount in a small bag labeled as follows:

3/8 Carriage Bolt Kit

Used for Mounting:

Grinder to Horizontal Mount or
Horizontal Mount to Pedestal or
Grinder to Pedestal

1. Orientation: Place grinder in the horizontal mount so the aluminum knob on the horizontal mount corresponds to the front (i.e. the knob faces the operator). See picture above for reference.
2. If mounting the grinder to a horizontal mount, the carriage bolts should be installed from the bottom and the nuts installed from the top so the heads of the bolts swing by each other in the narrow gap of the horizontal mount.

b. Watch this video to see an example of mounting the Grinder Frame:
https://youtu.be/mKhuXaMESCc?t=1317

4. Mount and Align your Motor

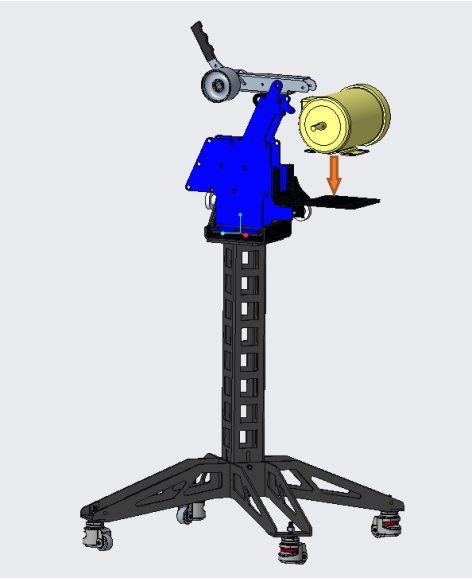

a. Motor Mounting Hardware will be in the plastic bag taped inside the Grinder Frame box. The bag will be labeled to verify the contents as follows:

Motor Mounting Hardware

Contents:

Qty 4: 5/16 carriage bolts
Qty 4: 5/16 flat washers
Qty 4: 5/16 Nylock Nuts

b. Slide your Drive Wheel on the Motor Shaft and make sure the 3/16" square drive key is installed in the keyway. If you are mounting to a bench top, the drive wheel must be installed in the opposite orientation in order for the motor to clear the top of the bench when the grinder is tilted horizontally.

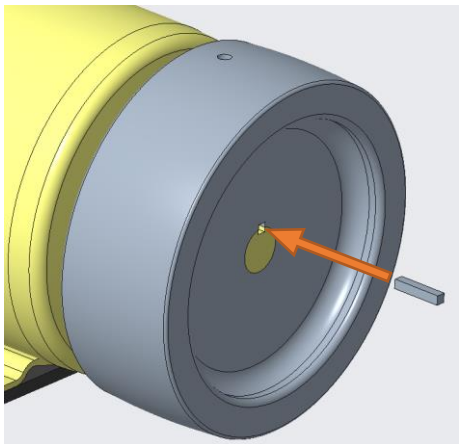

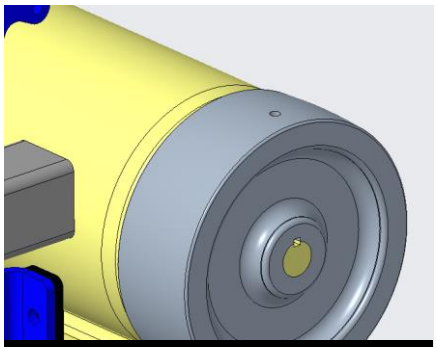

Drive Wheel orientation for bench-top mounting

c. Tighten the set screw above the keyway with an 1/8” allen wrench

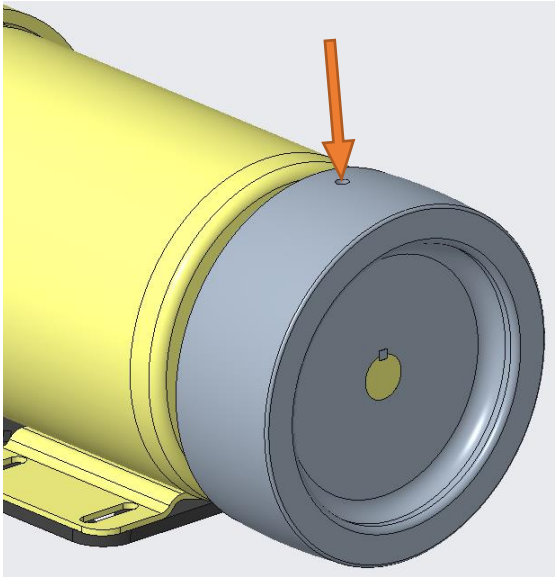

d. Level your motor by turning the reverse tracking knob (indicated below) until the top of the motor mount (black) is flush with the top of the mating flange (blue).

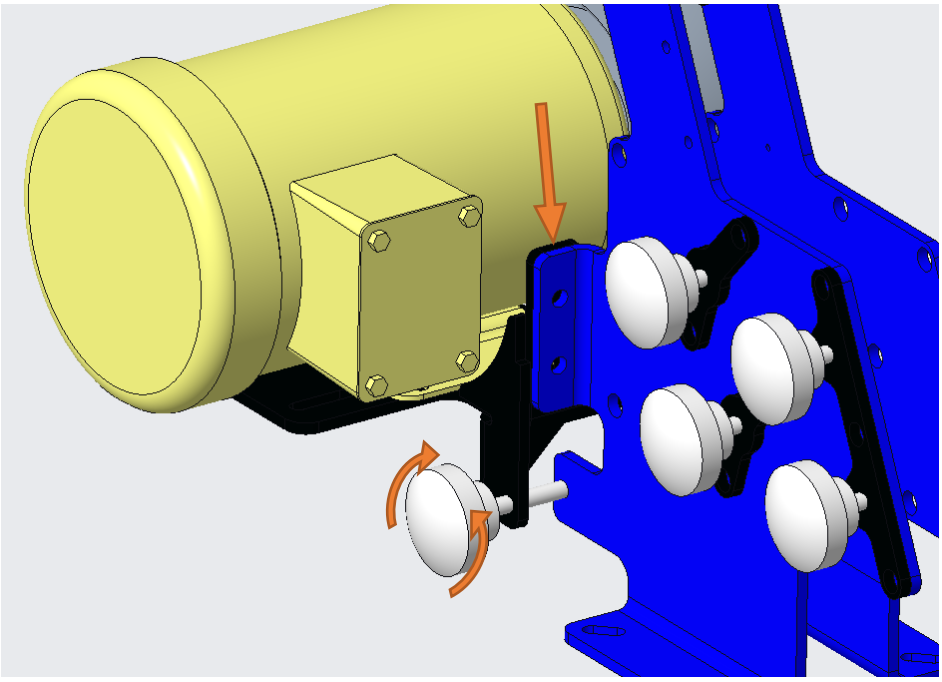

e. Align your motor with the provided alignment template. Take care to not scratch your powder coated frame or drive wheel.

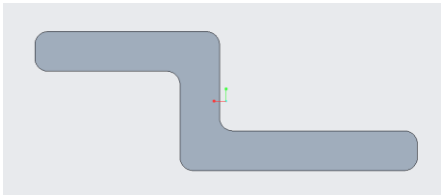

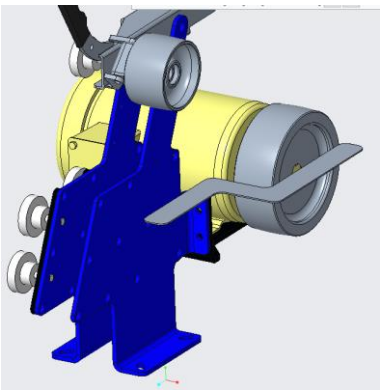

f. Double check motor alignment after tightening the motor bolts because the process of tightening may cause the motor to move from where it had been set.

g. Watch this video to see more detail about motor mounting and alignment:

https://youtu.be/mKhuXaMESCc?t=1644

5. Mount your VFD or Start/Stop switch to the left side of the Grinder Frame.

a. Where to find the hardware:

i. <u>VFD (variable speed)</u>: The VFD mounting bracket should be included in the box with the VFD and the hardware for mounting it should be plastic wrapped to the end of the large plug on the VFD or loosely assembled in the corresponding holes depending on which VFD you ordered. Hardware for 1.5hp, 2hp and 3hp VFD's will be labeled as follows:

<u>KBAC VFD Mounting Hardware</u>
Contents:
Qty 6: ¼" Screws
Qty 8: ¼" Washers
Qty 6: ¼" Nylock Nuts

ii. <u>Start/Stop switch (single speed):</u> The mounting bracket should be mounted to the start/stop switch with the hardware loosely assembled in the corresponding holes.

b. Plug your motor into your VFD or start/stop switch

c. Test your motor for proper forward rotation direction

i. If your motor is rotating the wrong direction, contact AmeriBrade for help with correcting the issue. (760)998-9602

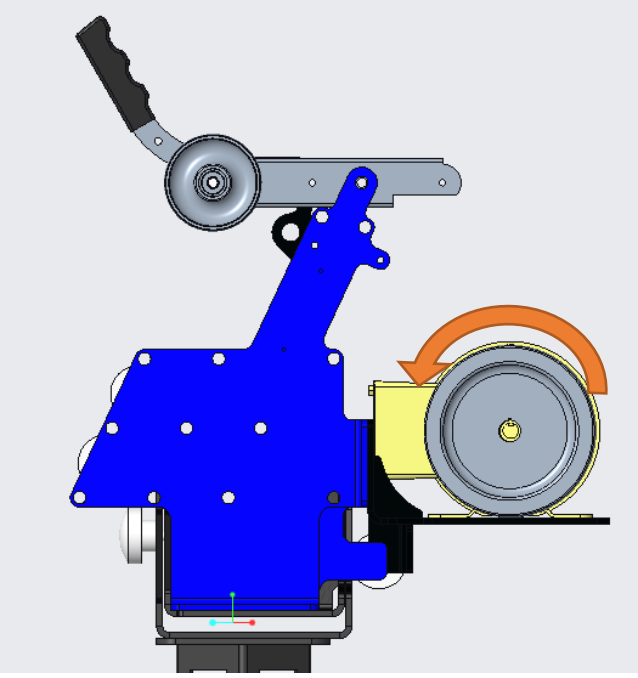

d. Watch this video to see more details about mounting your VFD or Start/Stop switch:

https://youtu.be/mKhuXaMESCc?t=1452

6. Install and Align a grinding accessory.

a. A grinding accessory should be slid in far enough such that there is a small amount of belt slack when the tension arm is in the latched position. Some slack is necessary for easy belt changes, but too much slack will result in low belt tension and poor belt tracking.

b. Release the tension latch. To release the latch, simultaneously pull down on the tension handle and pull out on the latch.

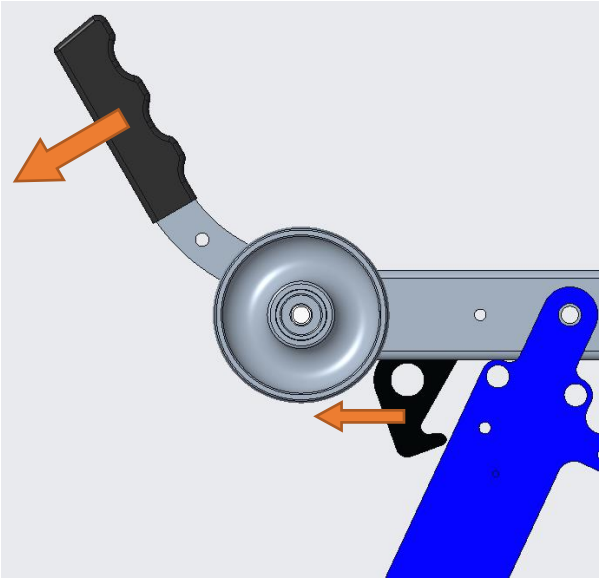

c. Spin the belt by hand for 2 to 4 full revolutions in the forward direction while roughly adjusting the tracking knob as indicated below to ensure the belt will not fall off when the motor is started

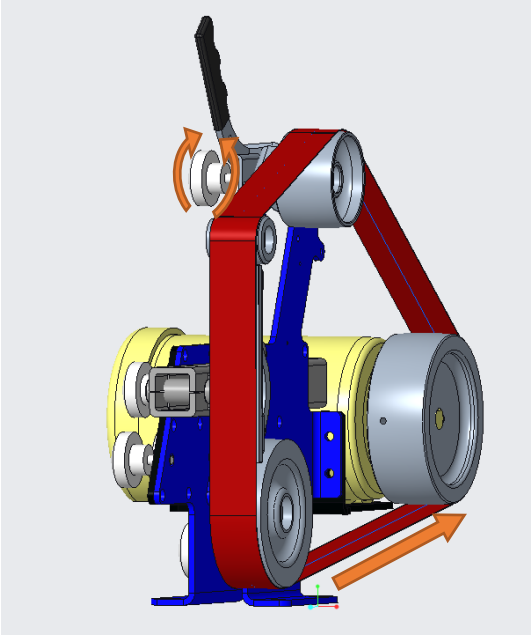

d. Run the motor slowly and re-adjust the tracking until the belt is accurately centered on the grinding accessory. Make note of how off-center the belt is on the tracking wheel for the next step.
e. Release belt tension and loosen the bolt indicated below so you can adjust the accessory left or right until the belt is simultaneously centered on the grinding accessory and on the tracking wheel.

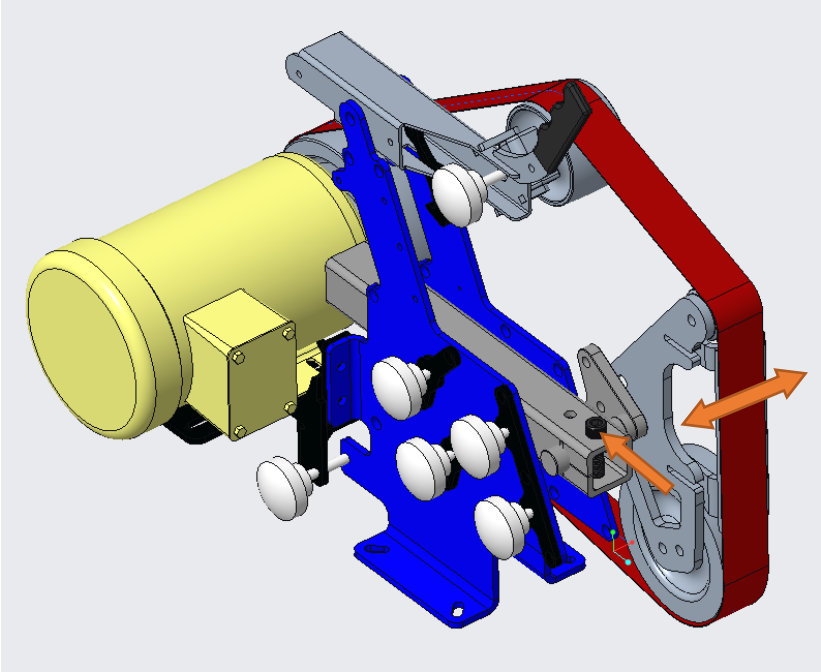

f. Watch this video for an example of installing a grinding accessory
https://youtu.be/mKhuXaMESCc?t=1866

7. Shut Down

a. Variable Speed Units:
    i. Push the Start/Stop switch down to shut down the machine and wait for the grinder to slow to a stop. Do not leave the Fwd/Stop/Rev switch in the center Stop position for extended periods of time without shutting off the Start/Stop switch. This may shorten the life of your motor and/or controller.
b. Single Speed Units:
    i. Push the large red Stop paddle until there is an audible click and wait for the grinder to slow to a stop.

8. Maintenance

a. If the grinder will not be in use for extended periods of time, unplug the machine from power, remove the abrasive belt, and release the tension latch so the tension springs are in a relaxed state.
b. Keep threaded components clear of grinding dust to extend their life.
c. Store unused accessories in a manner that keeps bearing seals out of the direct path of hot grindings
d. Do not store rubber wheels in the sun or against flat surfaces. Extended time in the sun will degrade the rubber and extended time against a flat surface may cause flat spots.

9. Troubleshooting

Trips Breaker

- *Possible Causes*
  - There is a GFI/GFCI somewhere in the circuit. Variable speed units should not be run on a circuit with a GFI/GFCI anywhere in line.
    - Solution: plug into a circuit that does not contain a GFI/GFCI
  - Too long of a run for the wire size supplying the power
    - Solution: Eliminate extension cords and/or use larger wire
  - Too small of a circuit breaker. Typically, this is only an issue if the trip is occurring during heavy grinding. Trips during motor startup are a sign of a different problem.
    - Solution: Use a minimum 15 amp breaker for 110V units and minimum 20 amp breaker for 220V units. Also, make sure no other equipment is using excessive power simultaneously on the same circuit.

Bogs Down Easily Under Load

- *Possible Causes*
  - Maximum Speed is set too high (Variable Speed Units Only)
    - Solution: Turn the MAX trimpot counterclockwise to the 1 o'clock position: *Always make sure the machine is disconnected from power before opening the speed controller or motor.*

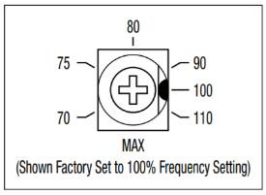

  - Torque Selection jumper is set incorrectly (Variable Speed Units Only)
    - Solution: Make sure jumper J10 is set on Constant Torque. *Always make sure the machine is disconnected from power before opening the speed controller or motor*

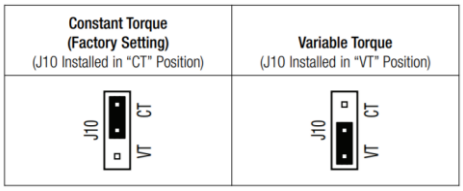

- Slip Compensation Trimpot needs tuning (Variable Speed Units Only)
  - Solution: Adjust the COMP trimpot in 1/8th turn increments (maximum ¼ turn each way from original setting). First clockwise, then counterclockwise. *Always make sure the machine is disconnected from power before opening the speed controller or motor*

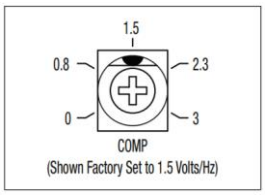

- Poor Wiring Connections

Always make sure the machine is disconnected from power before opening the speed controller or motor

  - Solution: Double check wire connections are tight and making good contact in the following locations:
    - Wires inside the speed controller coming from the motor or power cord. (Make sure screw terminals are tight and wires do not pull out of crimped terminal ends)
    - Wires inside motor conduit box. (Make sure wires do not easily pull out of crimped connectors)
    - Inside male and female ends of twist-lock-plug between motor and speed controller. (Open the plug and make sure individual wires do not easily pull out and make sure the screws securing the wires are clamping directly on the copper instead of the outer insulation. Clamping on the insulation will result in a poor connection)

Slows Down and Speeds Up Spontaneously

- *Possible Causes*
  - Acceleration Setting needs tuning (Variable Speed Units Only)
    - Solution: Adjust the ACCEL trimpot in 1/8th turn increments (maximum ¼ turn each way from original setting). First clockwise, then counterclockwise. *Always make sure the machine is disconnected from power before opening the speed controller or motor*

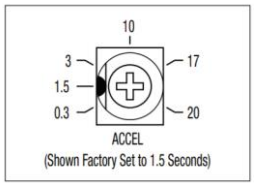

  - Deceleration Setting needs tuning (Variable Speed Units Only)
    - Solution: Adjust the DECEL trimpot in 1/8th turn increments (maximum ¼ turn each way from original setting). First clockwise, then counterclockwise. *Always make sure the machine is disconnected from power before opening the speed controller or motor*

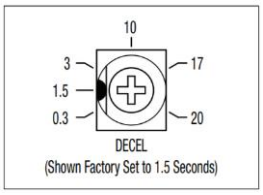

Won't Start

- *Possible Causes*
  - Breaker is Tripped
    - Solution: Reset Breaker. If problem persists, see "Trips Breaker" section above
  - Fwd/Stop/Rev switch is set in the center "Stop" position (Variable Speed Units Only)
    - Solution: Make sure a direction is selected by pushing the Forward/Reverse Switch up for forward or down for reverse
  - Start/Stop switch is not being pushed all the way into the start position
    - Solution: Push the momentary Start/Stop switch up into the third position until it springs back to center when released.
  - Start button on Start/Stop paddle switch is not being pushed all the way (Single Speed Units Only)
    - Solution: Push the green start button hard enough to cause an audible click

Other VFD Errors

1.5HP/2HP/3HP DRIVE OPERATING CONDITION AND STATUS LED INDICATOR

Drive Operating Condition	Flash Rate[1] and LED Color
Normal Operation	Slow Flash Green
Overload (120% – 160% Full Load)	Steady Red[2]
I^2t (Drive Timed Out)	Quick Flash Red[2]
Short Circuit	Slow Flash Red
Undervoltage	Quick Flash Red / Yellow[3]
Overvoltage	Slow Flash Red / Yellow[3]
Stop	Steady Yellow
Stand-By[4]	Slow Flash Yellow

Notes: 1. *Slow Flash = 1 second on and 1 second off. Quick Flash = 0.25 second on and 0.25 second off.* ***2.*** *When the Overload is removed, before the I^2t times out and trips the drive, the "ST" LED will flash green.* ***3.*** *When the Undervoltage or Overvoltage condition is corrected, the "ST" LED will flash Red / Yellow / Green.* ***4.*** *Only if the Forward-Stop-Reverse Switch is installed.*

1HP DRIVE OPERATING CONDITION AND STATUS LED INDICATOR

LED INDICATORS ARE ONLY VISIBLE WITH THE COVER REMOVED

Drive Operating Condition	LED and Flash Rate[1] Information	
	ST (Green)	OL (Red)
Normal operation	Slow Flash	Off
Overload (120% – 160% Full Load)	Off	On[2]
I^2t (Drive Timed Out)	Off	Quick Flash
Short Circuit	Off	Slow Flash
Undervoltage	Quick Flash[3]	On
Overvoltage	Slow Flash[3]	On
Stop	On	On

Notes: 1. *Slow Flash = 1 second on and 1 second off. Quick Flash = 0.25 second on and 0.25 second off.* ***2.*** *When the Overload is removed, before the I^2t times out and trips the drive, the "ST" LED will flash green and the "OL" LED will turn off.* ***3.*** *In Manual Restart Mode, when the Undervoltage or Overvoltage condition is cleared, the "ST" and "OL" LEDs will flash red / (red and green) / green.*

Vibration

- *Diagnosis/isolation*
  - Run the motor without a belt to see if the source is at the motor or drive wheel
  - If available, try a different grinding accessory
  - If the vibration source is not the motor or the grinding accessories, it may be the tracking wheel
  - If the vibration is isolated to a single grinding accessory that has multiple wheels (i.e. a platen), tilt the accessory into positions that are extreme angles such that each wheel leaves contact with the belt completely and run the machine in each position. If the vibration only persists in one position, then the source of the vibration can be isolated to the wheel that was still being driven by the belt.
  - Contact AmeriBrade to replace worn/defective wheels
    - (760)998-9602

Belt Tracking

Belt Wobble (Small side to side belt motion)

- Belt wobble is normal and varies between belts. It is due to the accuracy of the belt manufacturing process. Surface Conditioning (Scotch-Brite) and Leather belts will exhibit extreme amounts of belt wobble. Double check the other belt tracking problems below to make sure there is not another issue exaggerating the wobble.

Belt Wander (Large Belt Drifting)

- *Possible Causes*
  - Low Belt Tension
    - Solution: with the tension arm in the latched position, make sure the grinding accessory is positioned such that there is a minimal amount of belt slack. Excessive belt slack will cause low belt tension and poor belt tracking.
  - Worn Wheels
    - Solution: Replace wheels that show signs of asymmetric/tapered wear. Make sure accessories are properly aligned to extend wheel life.
  - Improper Motor Alignment
    - Solution: Use the alignment template to double check the motor position and use the reverse tracking knob to make sure the motor is level.
  - Vibration
    - Solution: Isolate the source of the vibration and eliminate it. See “Vibration” Section above

Belt Tracks Diagonally Across Platen

- *Possible Causes*
  - Replaceable platen plate needs adjustment
    - Solution: with a belt installed and centered on both platen wheels, use a 7/16” wrench to loosen the 2 screws holding on the replaceable platen plate and adjust it until the edge aligns with the edge of the belt. Re-Tighten the 2 screws.
  - Platen Chassis is bent
    - Symptom: when the belt is centered on one platen wheel it is off center on the other platen wheel.
    - Diagnosis: Place a reliable straight edge on the outside of both wheels to make sure they are planar with each other.
    - Solution: Contact AmeriBrade for a replacement platen chassis. (760)998-9602

Poor Reverse Tracking Response

- *Possible Causes*
  - Using incorrect tracking knob
    - Solution: Re-Level the motor as described in section 4d. Run the motor forward and use the upper tracking knob to get the belt tracking properly in forward again. Then switch back to reverse and use the motor tilting knob to achieve proper reverse tracking response.
  - Improper Accessory Alignment
    - Solution: Re-Level the motor as described in section 4d. Run the motor forward and follow the instructions as described in section 6 to align the accessory. Once the accessory is properly aligned running forward, switch back to reverse and use the motor tilting knob to achieve proper reverse tracking response.
  - Improper Motor Alignment
    - Solution: Use the alignment template to double check the motor position and use the reverse tracking knob to make sure the motor is level.

Broken Components

Contact AmeriBrade to replace damaged components.

Call: (760)998-9602

Email: info@ameribrade.com

Shipping:
AmeriBrade LLC
6988 Bandicoot Trl
18-682
Oak Hills CA, 92344