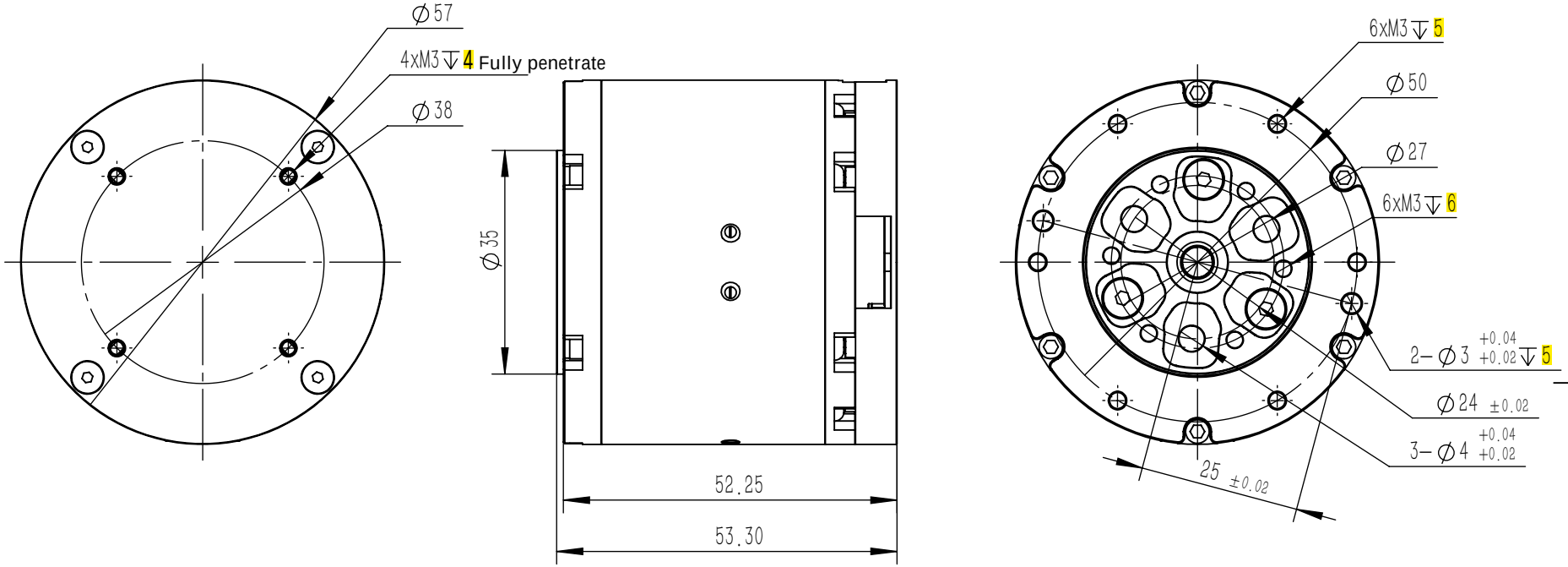

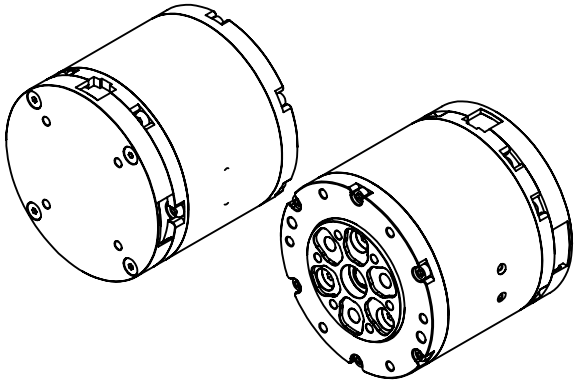

									DM Technology Co. Ltd
							Weight	Scale	DM4340 Geared Motor
							329.746	1:2	
						1	1		