Uncontrolled Copy

ORACLE PART REV. 003

NOTES:
1. NO IMPELLER GAUGE REQUIRED, CENTER IMPELLER IN HOUSING.
2. PACK UNIT WITH EXHAUST DOWN.
3. PACK 6 PER CONTAINER, 60 MAX. PER PALLET. PACK ASSY: 87854613.
PER 88834200 AND 88834408.

THERMALLY PROTECTED
CLASS "B" INSULATION

APPLICATION:		B	LA	FR	A	S	C	E	B	A
CUSTOMER:	FASCO AUSTRALIA	18	73	33	V	06	EA	5	3	6
CUSTOMER PN:	5-2810-681-006									

LEAD MATERIAL
18 GA. 105°C. 2/64 INSUL.
THERMO SJT 3 COND.
(1) BROWN, (1) BLUE, (1) GRN/YEL
28.50 / 26.50 [723.90 / 673.10]
W/ RIP 2.25 / 1.75 [57.15 / 44.45]
W / STRIP .68 / .56 [17.27 / 14.22]

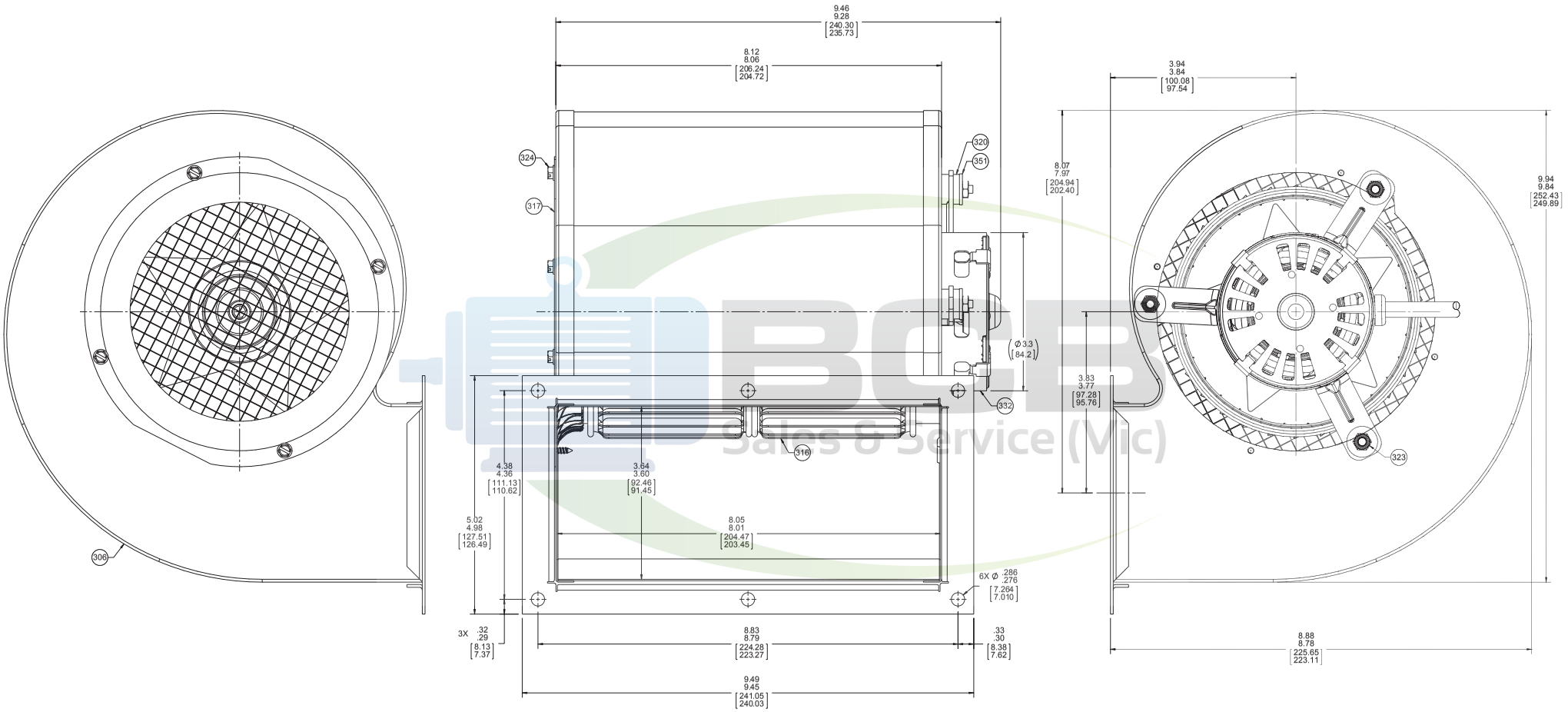

TYPICAL PERFORMANCE TEST DATA IN FREE AIR AT 240 VOLTS 50 Hz			
	RPM	WATTS	AMPS
	1391	129	94
BLOWER WEIGHT 8 1/2 LBS.			ENDPLAY .050/.010 [1.270/0.254]

DRAWING REVISION	REVISION BY	DATE
D	SED	10/14/2015
ECO	APPROVED BY	DATE
ECO-0085547	MLS	10/14/2015

ECO DESCRIPTION: REACTIVATE

COPYRIGHT REGAL BELOIT AMERICA, INC. ALL RIGHTS RESERVED
PROPRIETARY AND CONFIDENTIAL. THIS DOCUMENT IS THE PROPERTY OF REGAL BELOIT AMERICA, INC. COMMENT AND CONTAINS OWNER'S PROPRIETARY INFORMATION. ANY PERSON, CORPORATION OR OTHER FIRM RECEIVING IT IS DEEMED BY RECEIVING IT TO AGREE THAT IT, AND/OR ANY PART OF IT, SHALL NOT BE DISCLOSED TO ANY PERSON, CORPORATION OR OTHER FIRM, OR USED FOR ANY PURPOSE EXCEPT AS EXPRESSLY APPROVED IN WRITING IN ADVANCE BY OWNER. THIS DOCUMENT SHALL BE RETURNED TO OWNER UPON REQUEST. IT MAY BE SUBJECT TO CERTAIN RESTRICTIONS UNDER APPLICABLE EXPORT CONTROL LAWS AND REGULATIONS.

TOLERANCES UNLESS OTHERWISE SPECIFIED:

DEC.	INCH	mm	ANGLE
X	±0.1	[±2.5]	±1°
XX	±0.01	[±0.25]	
XXX	±0.005	[±0.127]	
XXXX	±0.0005	[±0.0127]	

REMOVE BURRS & BREAK SHARP EDGES: .003/.015 [.076/.38] X 45°
CORNER FILLETS: R.02 [.51]
MACHINED SURFACES: 125/ INCH 3.2/ mm
mm SHOWN IN [BRACKETS]

DRAWN BY	Regal Beloit America, Inc.
SED	
DATE	DESCRIPTION
10/14/2015	BLOWER ASSY
APPROVED BY	
MLS	
DATE	
10/14/2015	
REFERENCE	MATERIAL
	PROCESS/FINISH: BLACK PAINT
THIRD ANGLE PROJECTION	SIZE: D
	DRAWING NUMBER: 70730354
	SHEET: 1 OF 1