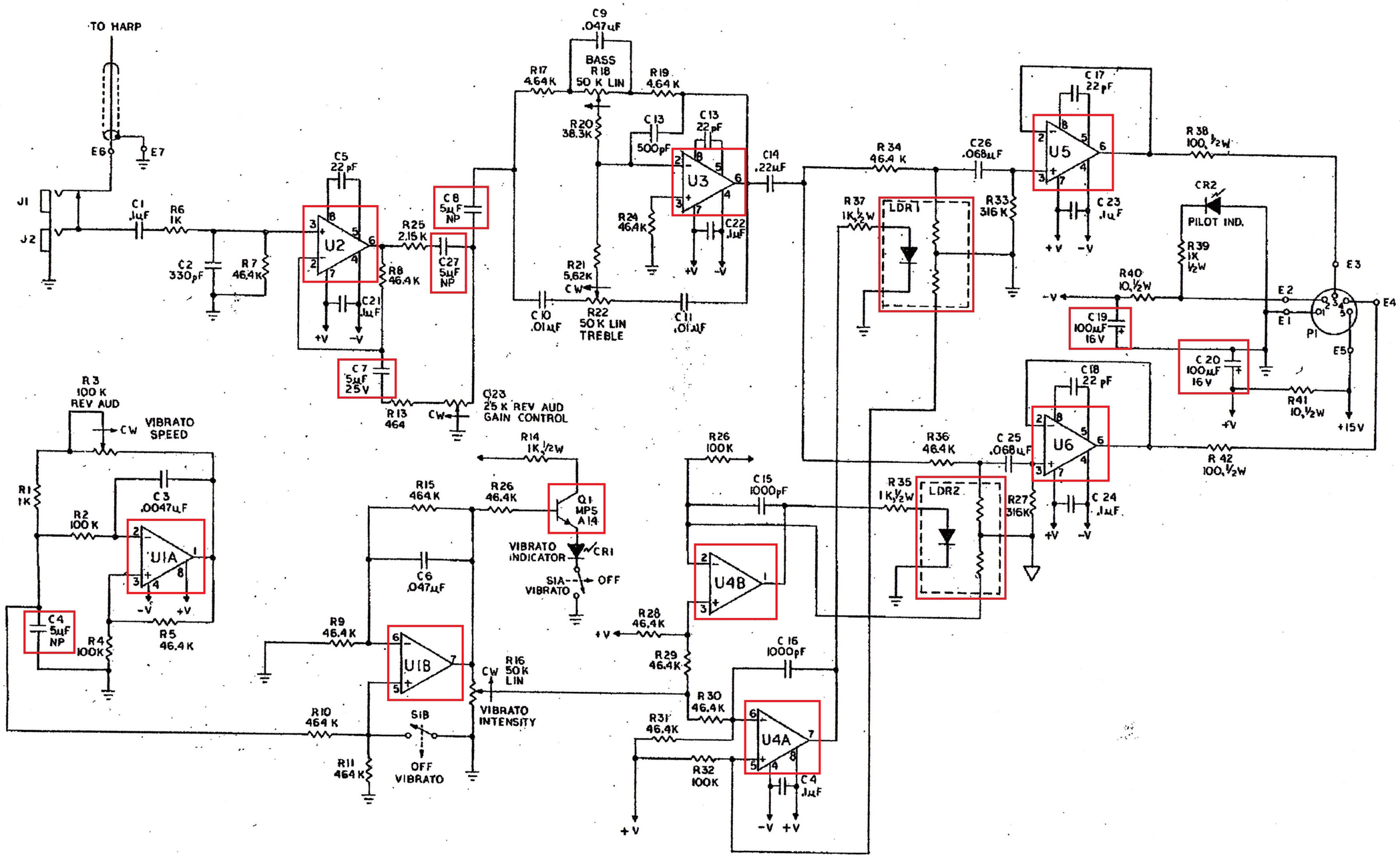

JANUS 5-PIN PREAMP (5 KNOB VERSION) REBUILD KIT

PCB ASSEMBLY # 018017

3. U2, U3, U5 & U6 ARE NE5534.
2. U1 & U4 ARE RC4558
1. ALL RESISTORS ARE IN OHMS, ± 1%, ¼ WATT.

NOTES: UNLESS OTHERWISE SPECIFIED

Fender / Rogers / Rhodes

CBS MUSICAL INSTRUMENTS — A DIVISION OF CBS, INC. FULLERTON, CALIFORNIA 92631

PART NAME			
SCHEMATIC - RHODES PRE-AMP (LOW NOISE)			
RELEASE	SIZE D	PART NO. 018019	REV
SCALE	MODEL NO.		