FIELD CUTOUT DETAIL

Customer Service
(800) 247-7668

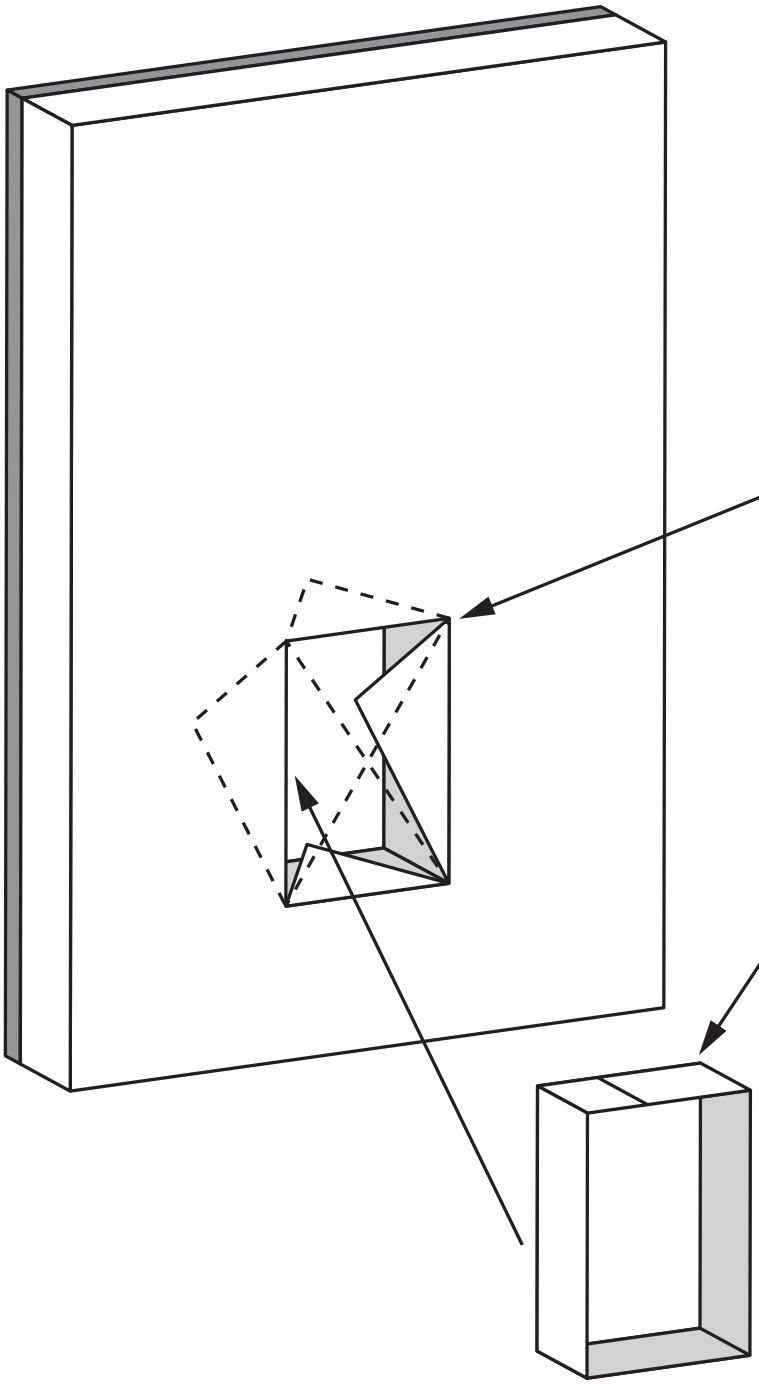

- AFTER CUTOUT SIZE IS DETERMINED, DRAW CUTOUT LOCATION ON BACK SIDE OF WALL PAD.
- WITH A JIG SAW, CAREFULLY REMOVE THE WOOD BACKING.
- WITH AN ELECTRIC KNIFE, CAREFULLY REMOVE THE FOAM IN THE DESIRED CUTOUT LOCATION.
  *MAKE SURE THAT THE VINYL IS NOT CUT IN THIS STEP.
- FROM EXTRA VINYL, CUT A STRIP AS DEEP AS THE PANEL AND LONG ENOUGH TO GO AROUND ALL FOUR SIDES OF CUTOUT.
- WITH VINYL ADHESIVE GLUE, PLACE STRIP AROUND INSIDE OF OPENING.
- ONCE VINYL STRIP HAS BEEN ADHERED TO THE INSIDE OF THE OPENING, MAKE AN “X” CUT THRU THE VINYL AND FOLD THE FLAPS BACK AS SHOWN.
- SECURE THE “X” FLAPS TO WOOD BACKING.