Installation Instruction

Before You Begin

1. Shut off the main water supply.
2. Do not disassemble the main body, as it has been installed & commissioned correctly & precisely before leaving the factory.
3. To avoid the faucet from jamming, DO flush the water pipe before installation.
4. After installation, make sure every joint is safely sealed (NO LEAKAGE).
5. Make sure to connect the hot/cold inlet pipe correctly, if standing in front, hot water pipe connecting to the left and cold water pipe connecting to the right.
6. It is recommended that installation of the product be done by a professional plumber.

Cleaning & Maintenance

To keep product clean and shiny follow the instruction below.

1. Flush with clean water and dry with soft cloth only.
2. Do not use any detergent, polisher, sane-cloth, or a scraper.
3. Do not use acid detergent.

Installation

1.handle
2.hot&cold waterline
3.spout body
4.O-ring
5.threaded pipe
6.rubber washer
7.poly washer
8.mounting nut
9.waterline
10.rubber washer
11.hose connector
12.rubber washer
13.handshower
14.rubber washer
15.handshower holder
16.O-ring
17.rubber washer
18.mounting nut
19.hose
20.metal ring
21.weight ball

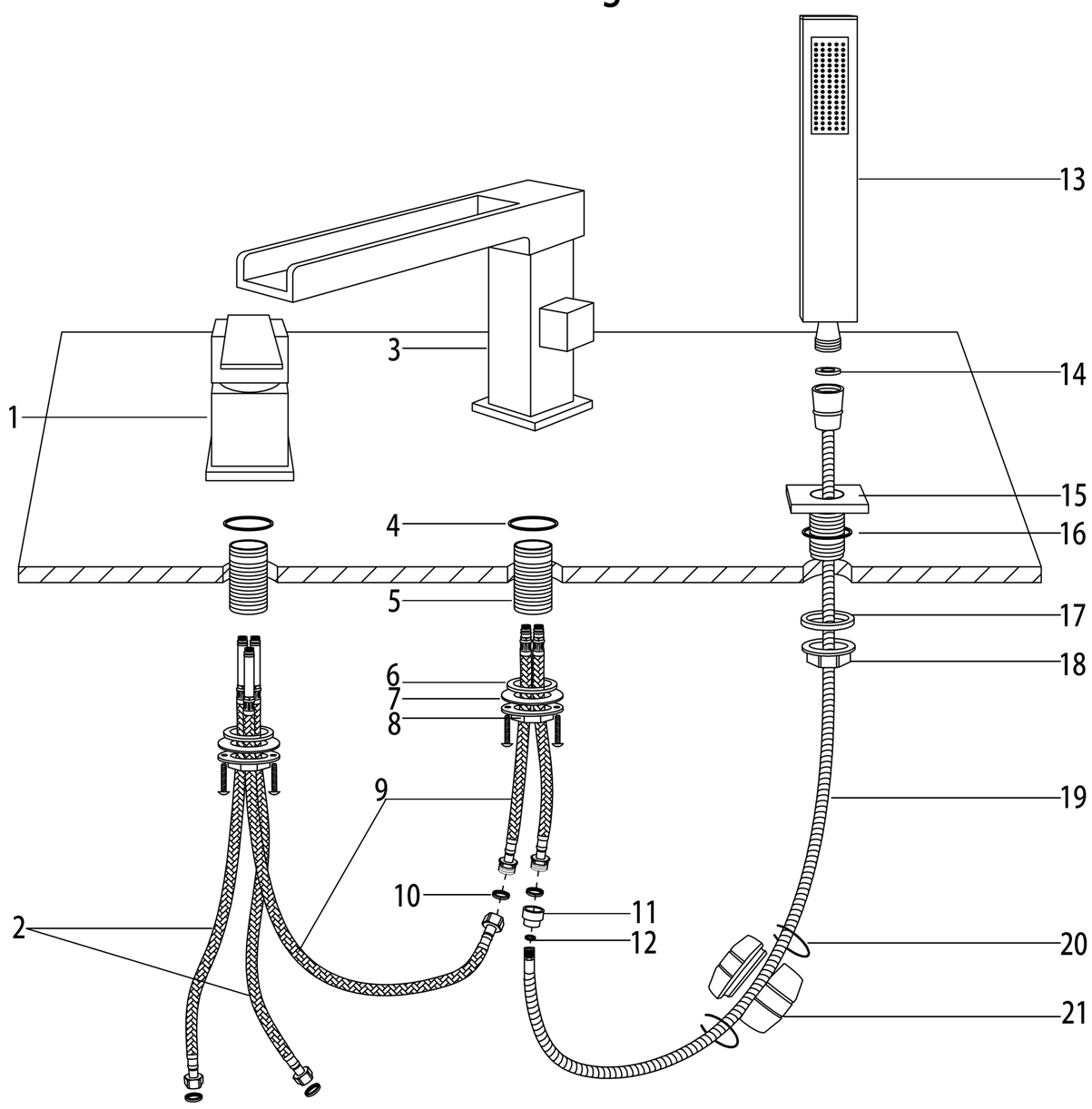

1. Fit O-ring into the bottom groove of spout body and insert spout body into specified drill hole on the counter top.
2. Screw short waterlines into the corresponding screw-holes of spout body through rubber washer, poly washer and mounting nut from underneath the counter top. Then, slide washers and mounting nut onto the threaded pipe of the spout body, fixing the screws.
3. Install the O-ring and insert the handle into the specified drill hole. Screw waterlines into the corresponding inlets of the handle through rubber washer, poly washer and mounting nut underneath the counter top. Then, slide washers and mounting nut onto the threaded pipe and secure with screws.
4. Install the O-ring and insert handshower holder into specified drill hole. Put the rubber washer on and screw in the mounting nut underneath the counter top.
5. Add rubber washer and connect the hose to the hand shower. Put on rubber washer and hose connector and connect the hose to one waterline onto the bottom of the spout body. Then, place the weight ball on the hose and fit metal rings into the grooves of weight ball.
6. Connect the waterlines onto the bottom of the handle and the spout body according to the diagram.
7. Connect the hot & cold waterlines to the main water supply line.