Installation Instruction

Before You Begin

1. Shut off the main water supply.
2. Do not disassemble the main body, as it has been installed & commissioned correctly & precisely before leaving the factory.
3. To avoid the faucet from jamming, DO flush the water pipe before installation.
4. After installation, make sure every joint is safely sealed (NO LEAKAGE).
5. Make sure to connect the hot/cold inlet pipe correctly, if standing in front, hot water pipe connecting to the left and cold water pipe connecting to the right.
6. It is recommended that installation of the product be done by a professional plumber.

Cleaning & Maintenance

To keep product clean and shiny follow the instruction below.
1. Flush with clean water and dry with soft cloth only.
2. Do not use any detergent, polisher, sane-cloth, or a scraper.
3. Do not use acid detergent.

Installation

1. spout body
2. O-ring
3. threaded tail pipe
4. rubber washer
5. mounting nut
6. rubber washer
7. triple tube
8. handle
9. set screw
10. Allen key
11. base plate
12. foam washer
13. mounting nut
14. valve
15. waterlines
16. rubber washer

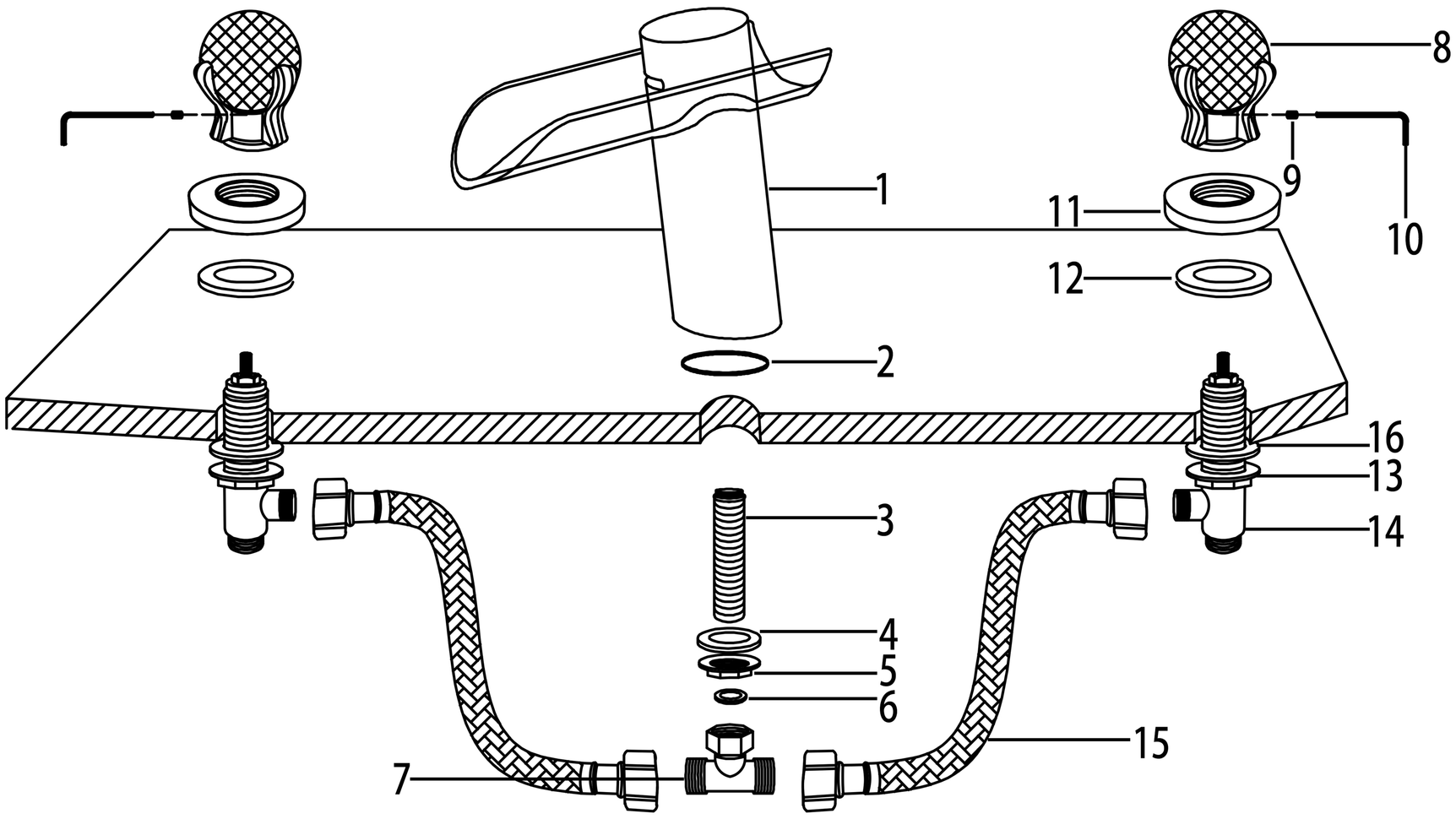

1. Screw the threaded tail pipe into the spout body and fit O-ring into the bottom groove of the spout body. Insert spout body into specified drill hole on the counter top.
2. Install rubber washer to the threaded tail pipe of the spout body from underneath the counter top and then screw the mounting nut.
3. Fix spout body correctly and install the triple tube by screwing onto the threaded tail pipe of the spout body. Make sure to add the rubber washer inside of the female end of the triple tube.
4. Install valve into specified drill hole underneath the counter top. Fit the foam washer into the base plate and screw base plate and the handle into valve. Adjust the height and position of valve, then screw mounting nut to tighten valve underneath counter top securely.
5. Tighten set screw with Allen key to fix the handle.
6. Screw waterlines into triple tube and valve. Connect waterlines (not included) onto the bottom of valve and then to main water supply line.