Installation Instruction

Before You Begin

1. Shut off the main water supply.
2. Do not disassemble the main body, as it has been installed & commissioned correctly & precisely before leaving the factory.
3. To avoid the faucet from jamming, DO flush the water pipe before installation.
4. After installation, make sure every joint is safely sealed (NO LEAKAGE).
5. Make sure to connect the hot/cold inlet pipe correctly, if standing in front, hot water pipe connecting to the left and cold water pipe connecting to the right.
6. It is recommended that installation of the product be done by a professional plumber.

Cleaning & Maintenance

To keep product clean and shiny follow the instruction below.
1. Flush with clean water and dry with soft cloth only.
2. Do not use any detergent, polisher, sane-cloth, or a scraper.
3. Do not use acid detergent.

Installation

1. valve
2. escutcheon
3. set screw
4. Allen key
5. indication button
6. diverter knob
7. handle
8. wall supply holder
9. rubber washer
10. hand shower
11. rubber washer
12. shower hose
13. escutcheon
14. Teflon tape
15. tub spout
16. threaded pipe

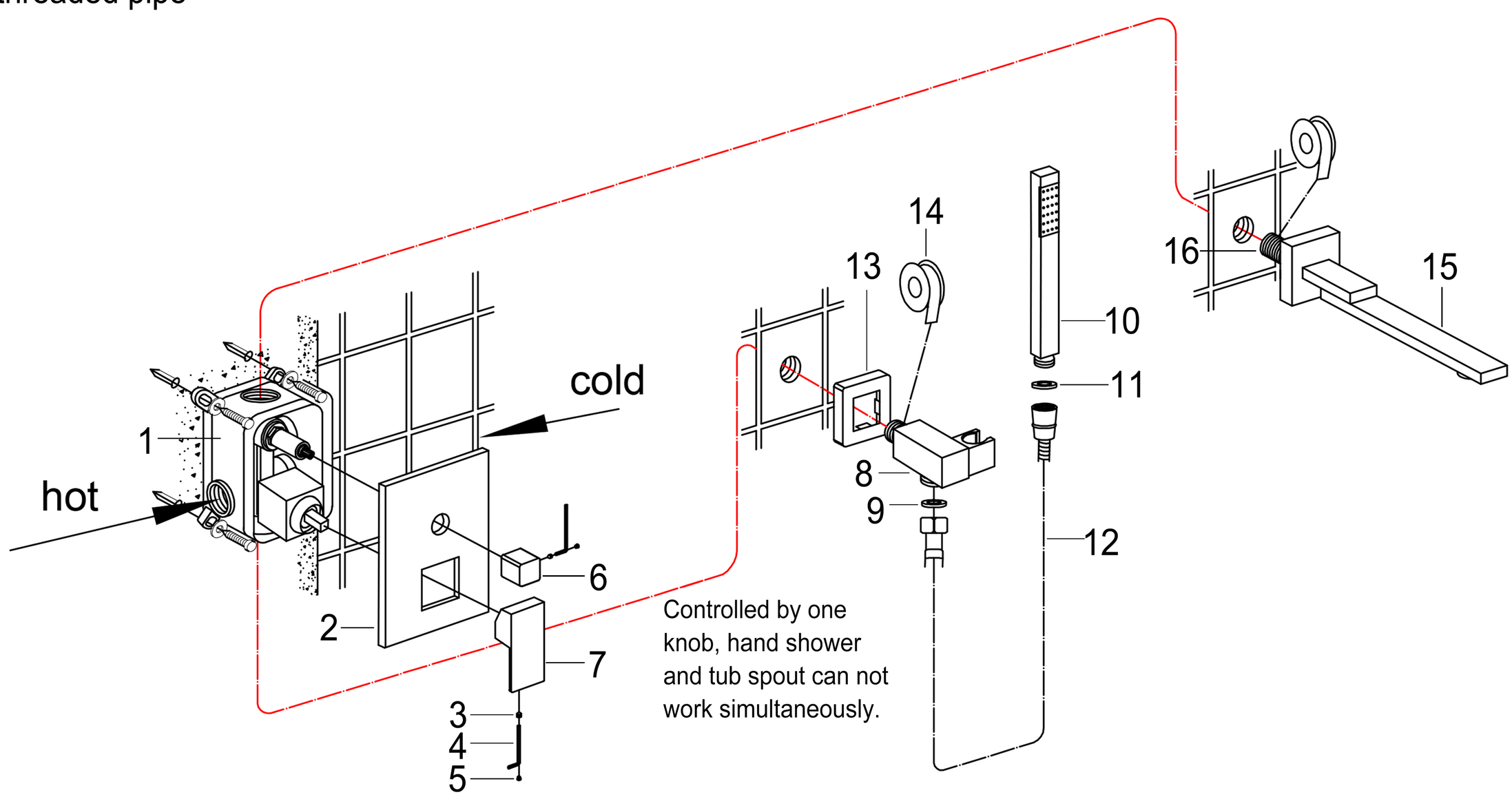

1. Fix the valve into the wall. Use air bubble level on the protective cover to ensure that the valve is straight and level. (**Important:** Flush the water supply pipes to remove any dirt and debris before installing the valve body.)
2. Wrap Teflon tape around the pipe threads. Connect hot and cold water supply lines and the in-wall pipes(not included) as desired to the valve.
3. Turn on the water supply and open the cartridge. Make sure that no leakage occurs.(**Note:** Test the water pressure after the pipe connections have been made and before the finished wall is completed.)
4. Remove the protective cover when the finished wall is completed and install escutcheon to the valve and press it against the finished wall. Then install the handle and diverter knob, tighten set screws with Allen key, and put on indication button.
5. Apply Teflon tape to the threaded tail pipe and install the tub spout into the outlet on the wall.
6. Apply Teflon tape to the threaded end, then fix the escutcheon onto the wall supply holder and screw the wall supply holder into the hand shower outlet.
7. Add rubber washers at both ends of the shower hose. Connect shower hose to the wall supply holder and hand shower.
8. Place the hand shower into the hand shower holder.

*We recommend using solid copper pipes instead of waterlines for connection and fix the pipes to the wall with fixing bracket.