Installation Instruction

Before You Begin

1. Shut off the main water supply.
2. Do not disassemble the main body, as it has been installed & commissioned correctly & precisely before leaving the factory.
3. To avoid the faucet from jamming, DO flush the water pipe before installation.
4. After installation, make sure every joint is safely sealed (NO LEAKAGE).
5. Make sure to connect the hot/cold inlet pipe correctly, if standing in front, hot water pipe connecting to the left and cold water pipe connecting to the right.
6. It is recommended that installation of the product be done by a professional plumber.

Cleaning & Maintenance

To keep product clean and shiny follow the instruction below.
1. Flush with clean water and dry with soft cloth only.
2. Do not use any detergent, polisher, sane-cloth, or a scraper.
3. Do not use acid detergent.

Installation

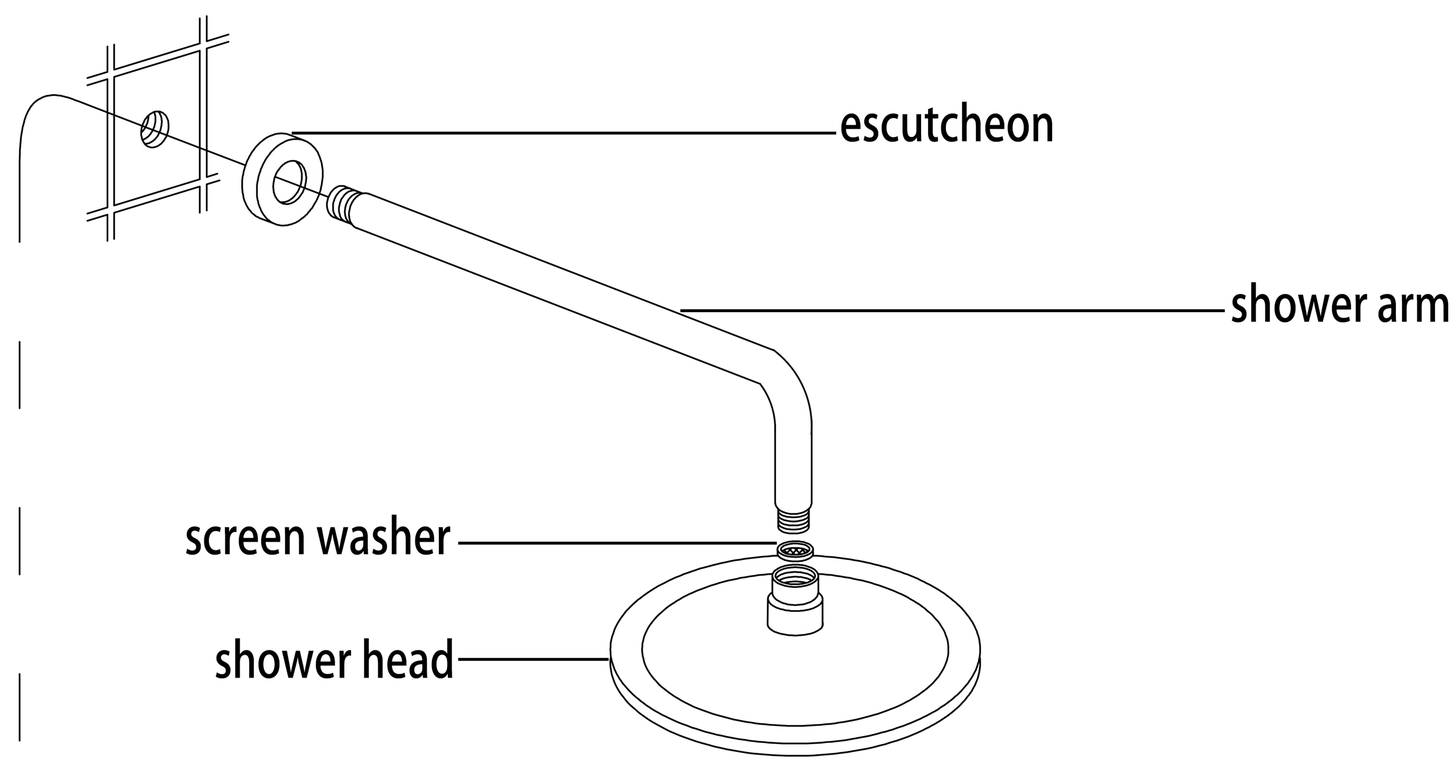

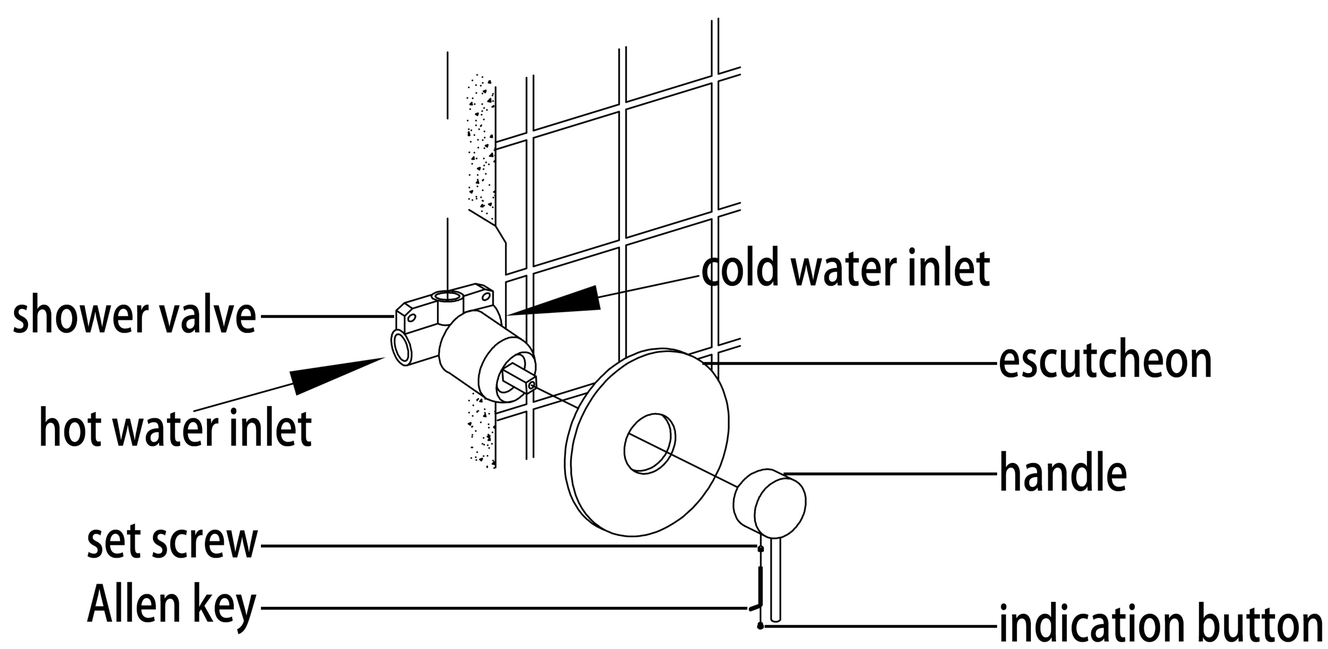

1. Fix the shower valve into the wall. Use a level to ensure that the valve is straight and level. (**Important**: Flush the water supply pipes to remove any dirt and debris before installing the valve body.)
2. Wrap Teflon tape around the pipe threads. Connect hot and cold water supply lines and all the in-wall pipes (not included) as desired to the shower valve.
3. Turn on the water supply and open the cartridge. Make sure that no leakage occurs. (**Note**: Because the shower system has a built-in valve, test the water pressure after the pipe connections have been made and before the finished wall material is installed.)
4. Remove the protective cover when the finished wall is completed and install the escutcheon.
5. Install the handle and tighten the set screw with Allen key. Then, put on indication button.
6. Wrap shower arm threads with Teflon tape. Install the shower arm into the shower outlet through the escutcheon. Then, add the screen washer and install the shower head to the shower arm.