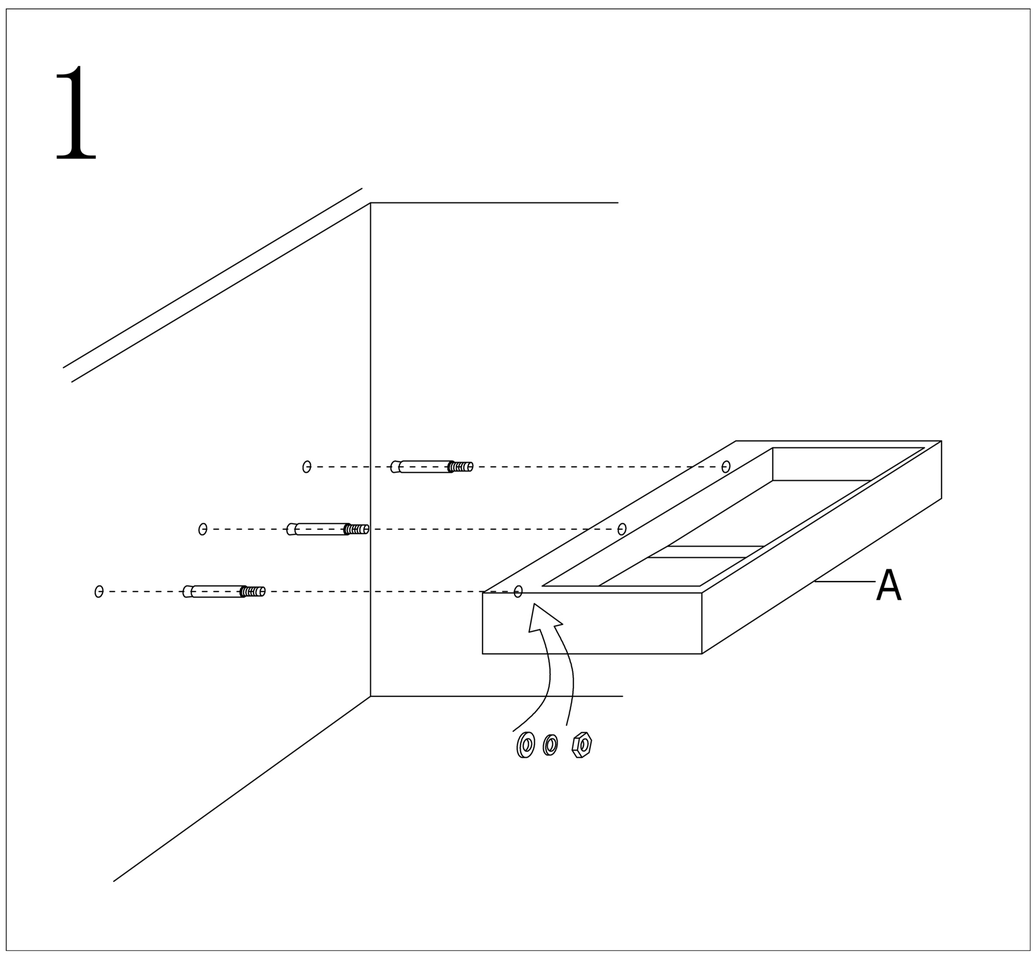

1. Mark the position, drill holes and fix the expansion screw bolts to the wall. Then, install the sink (A) to the expansion screw bolts through the mounting holes, fixing with washers and nuts.

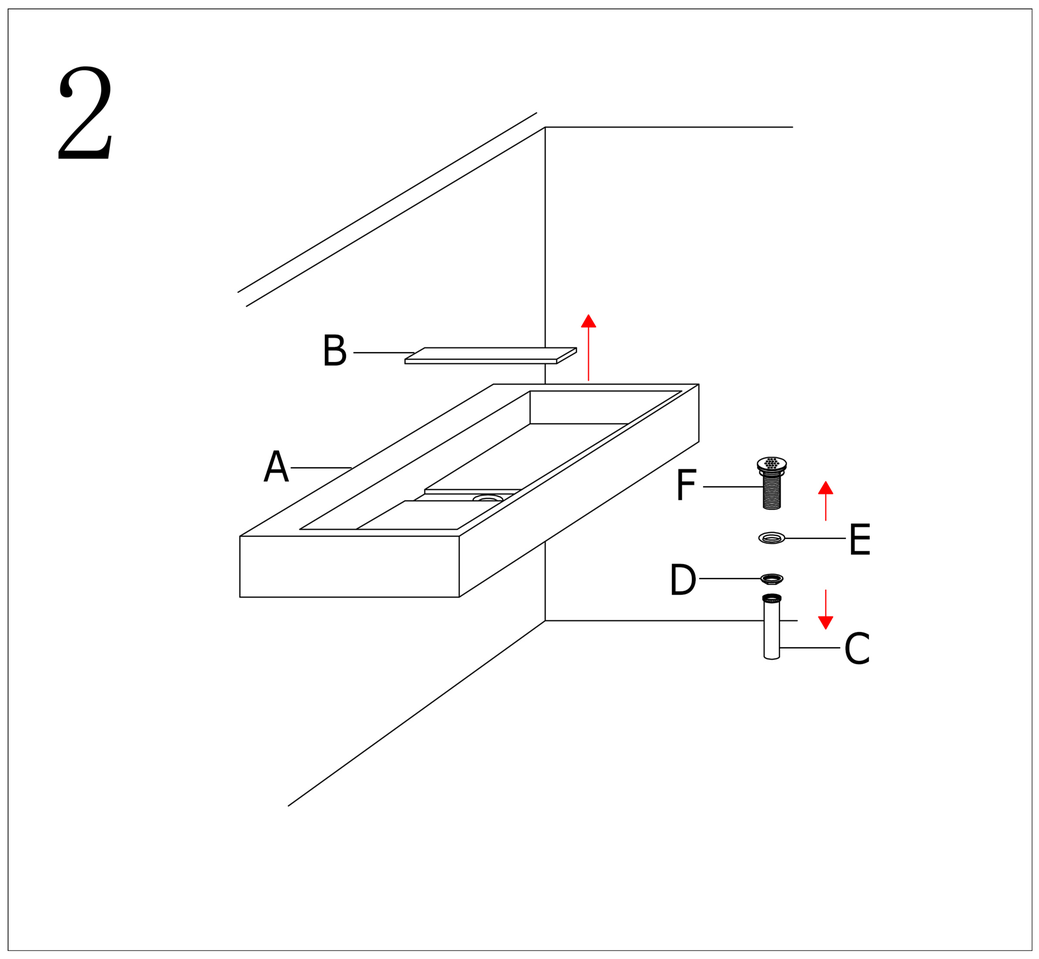

2. Remove the cover plate (B) from the sink (A) and separate the tailpipe (C), mounting nut (D), and rubber washer (E) from the drain body (F).

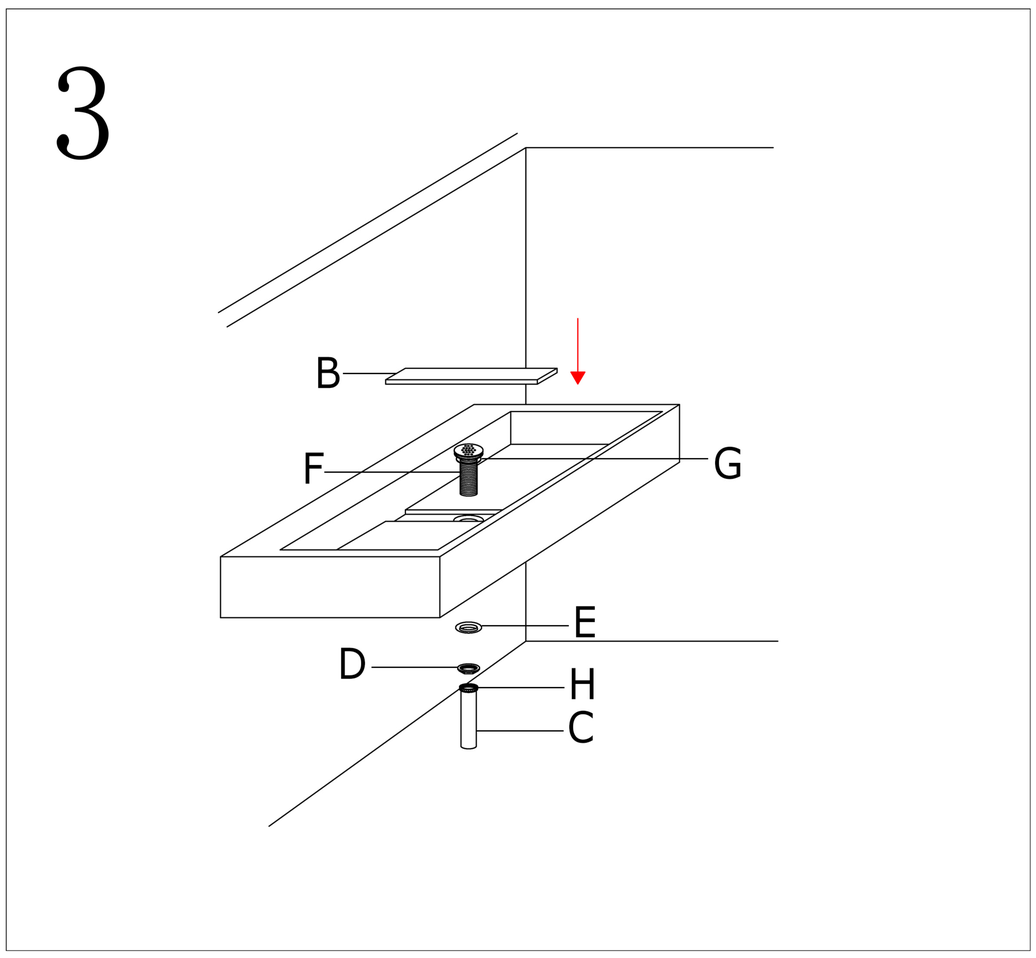

3. Fit the rubber washer (G) and insert the drain body (F) through the central hole, screwing in rubber washer (E) and mounting nut (D) securely. Attach the tailpipe (C) to the drain body, tightening the lock nut (H). Then, put on the cover plate (B).

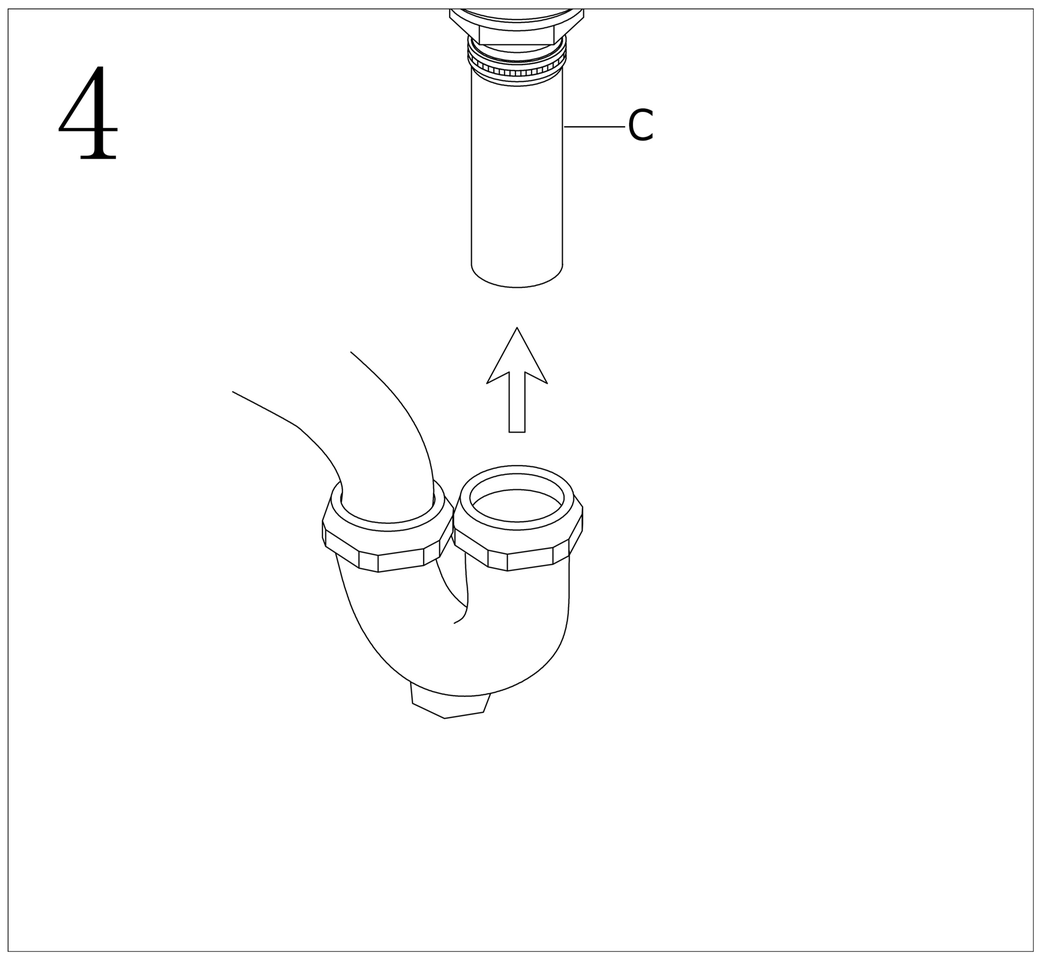

4. Connect the trap to the tailpipe (C).