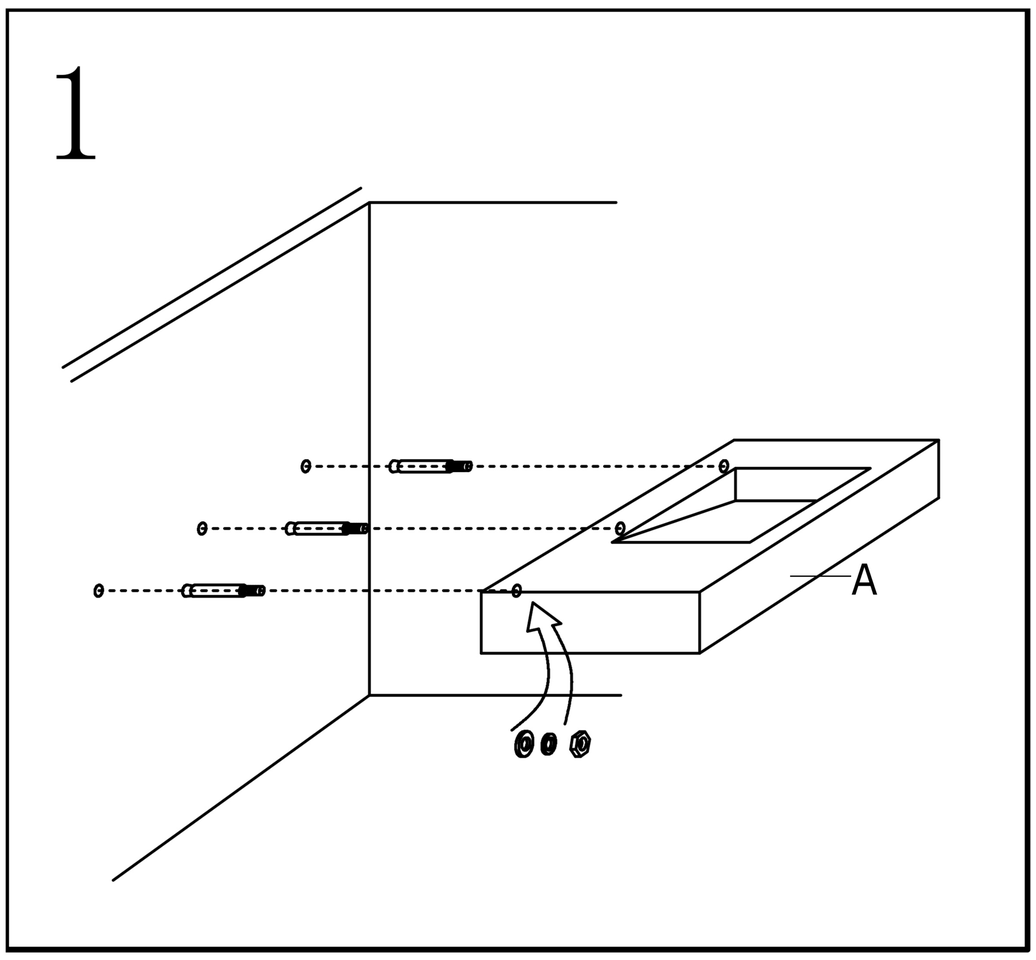

1. Mark the position, drill holes and fix the expansion screw bolts to the wall. Then, install the sink (A) to the expansion screw bolts through the mounting holes, fixing with washers and nuts. (**Note:** Sink of different sizes has a different number of expansion screw bolts)

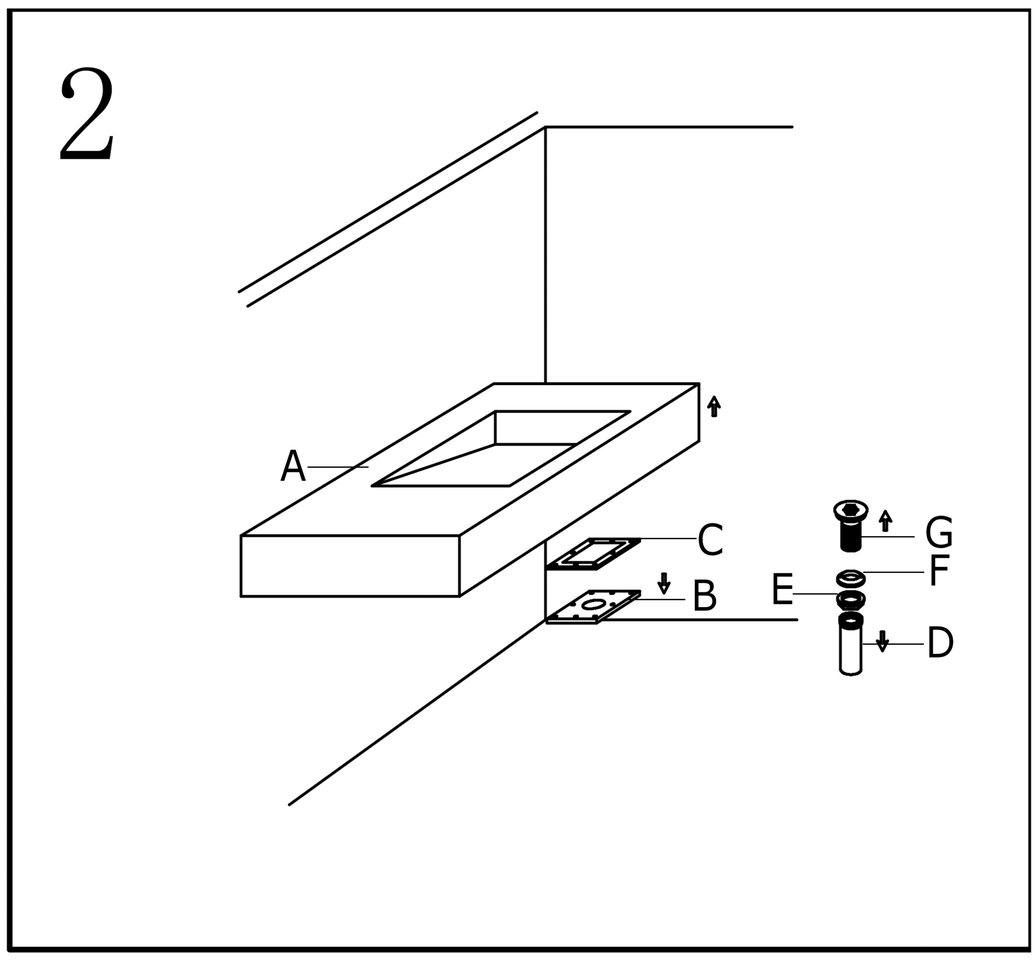

2. Remove the mounting plate (B) and rubber gasket (C) from the sink (A) and separate the tailpipe (D), mounting nut (E), and rubber washer (F) from the drain body (G).

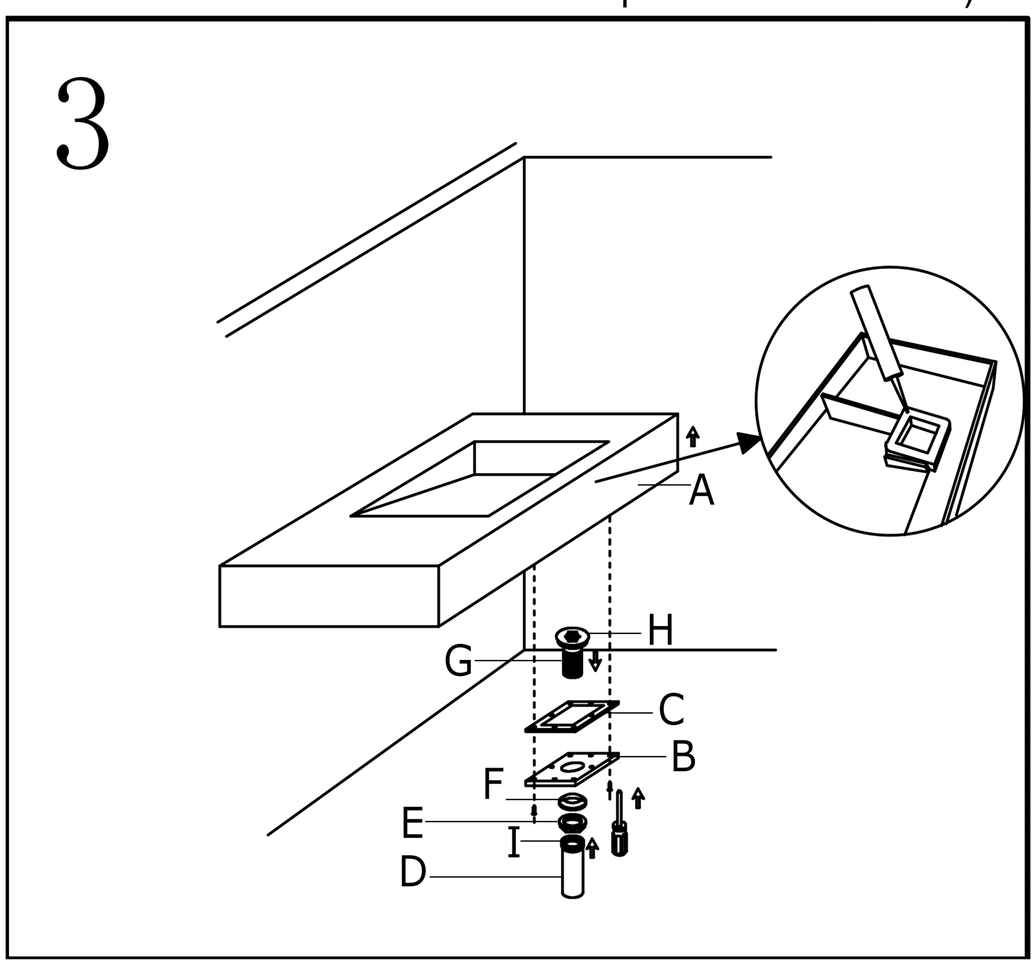

3. Fit the rubber washer (H) and insert the drain body (G) through the mounting plate (B), screwing in rubber washer (F) and mounting nut (E) securely. Attach the tailpipe (D) to the drain body, tightening the lock nut (I). Then, apply glass cement to the bottom mounting interface. Add a rubber gasket (C) and install the mounting plate (B) back to the sink (A), fixing the screws. Apply glass cement again to the edge of the mounting interface.

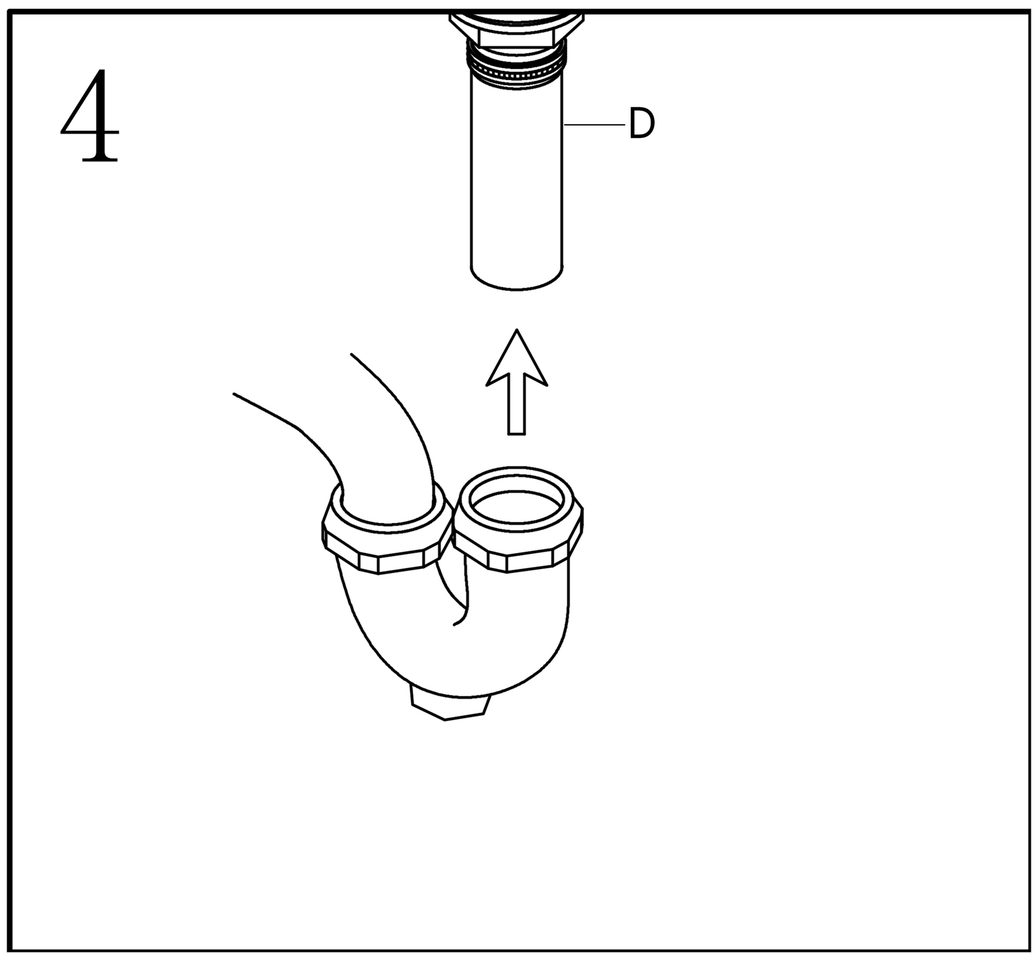

4. Connect the trap to the tailpipe (D).