Dining Table #J040027 Installation

INSTALLATION MANUAL Tools You Will Need:

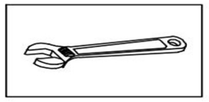
Adjustable wrench

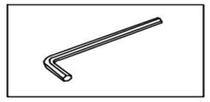
Hexagon wrench

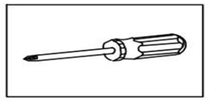
Philips Screwdriver

Before the Installation

1. Do not throw away packing materials until assembly is complete for small parts may come loose inside the carton during shipment. If parts are missing, please contact us.
2. Assemble this item on a soft surface, such as carpet to protect the finish.
3. Proper assembly of this item requires 2 people.
4. Periodically check to ensure that all connections are tight.
5. It is recommended that installation of the product be done by a qualified licensed furniture assembler.

Care and Cleaning

1. To protect the finish, avoid use chemicals and household cleaners.
2. All hot serving dishes should be placed on a pad.
3. Any liquid spilled onto the top should be cleaned up immediately with a damp cloth.

Parts List

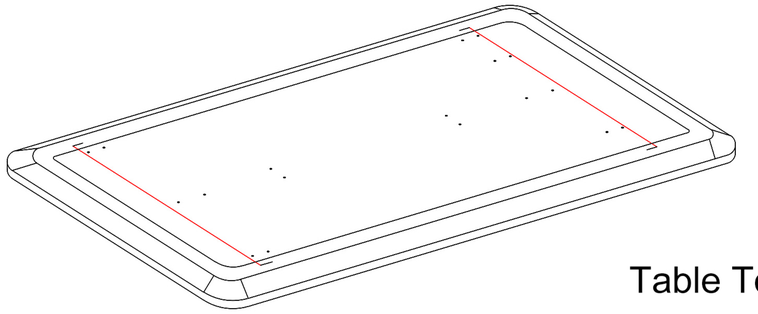

Table Top (A x 1)

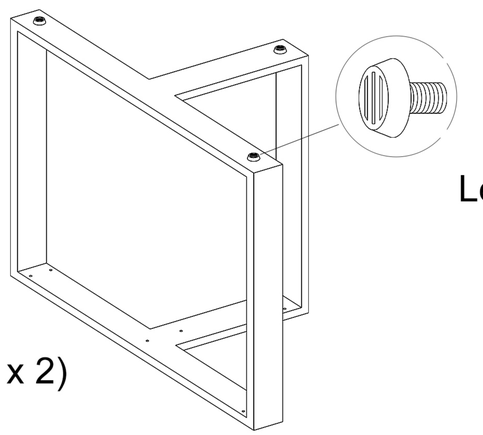

Leveler (D x 6) (pre-installed)

Metal Leg (B x 2)

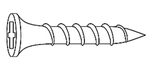

Screw (C x 16)

Note: Do not fully tighten all bolts until all parts are in place. Failure to follow these instructions may cause the bolt to misalign during assembly.

Installation Guide

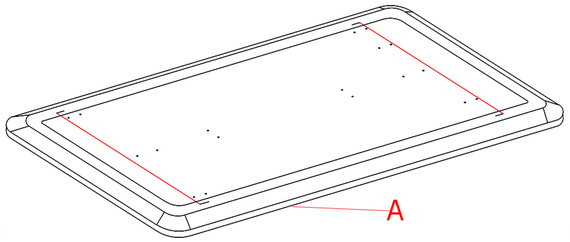

1. Place the table top (A) upside down on a clean surface.

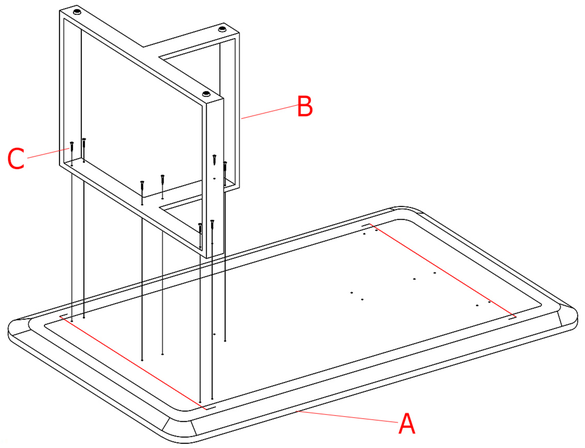

2. Match the holes of metal legs (B) with holes given on the bottom of the table top (A) with screws (C).

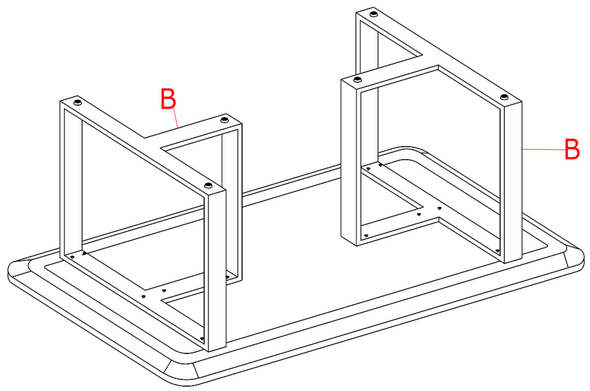

3. Repeat step 2 with the second metal leg (B).

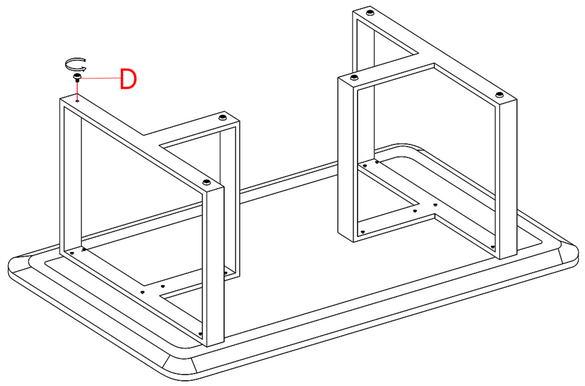

4. Adjust the pre-installed leveler (D) as per floor level.