HM-020019

Dual Flush 1.1/1.6GPF
4.0/6.0LPF

Features

Wall Mount
Rimless washdown flush system
UF/PP seat cover
P-trap
Squart bowl
Factory flush-tested
ADA compliant
High efficiency
21-5/8" x14-1/8" x12-1/4" (550x360x310mm)
Vitreous china

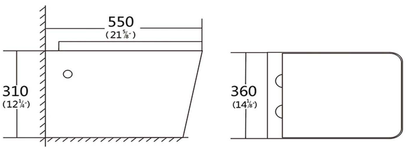

Components

Installation screw
Toilet seat cover

Codes & Standards

Codes: Uniform Plumbing Code (UPC®)
National Plumbing Code of Canada
Standards: ASME A112.19.2-2013/CSA B45.1-13
including Update No. 1 dated October 2013
and ASME A112.19.14-2013

Certifications

IAPMO(cUPC) File No.: 11135

UPC C ®

ADA Compliant
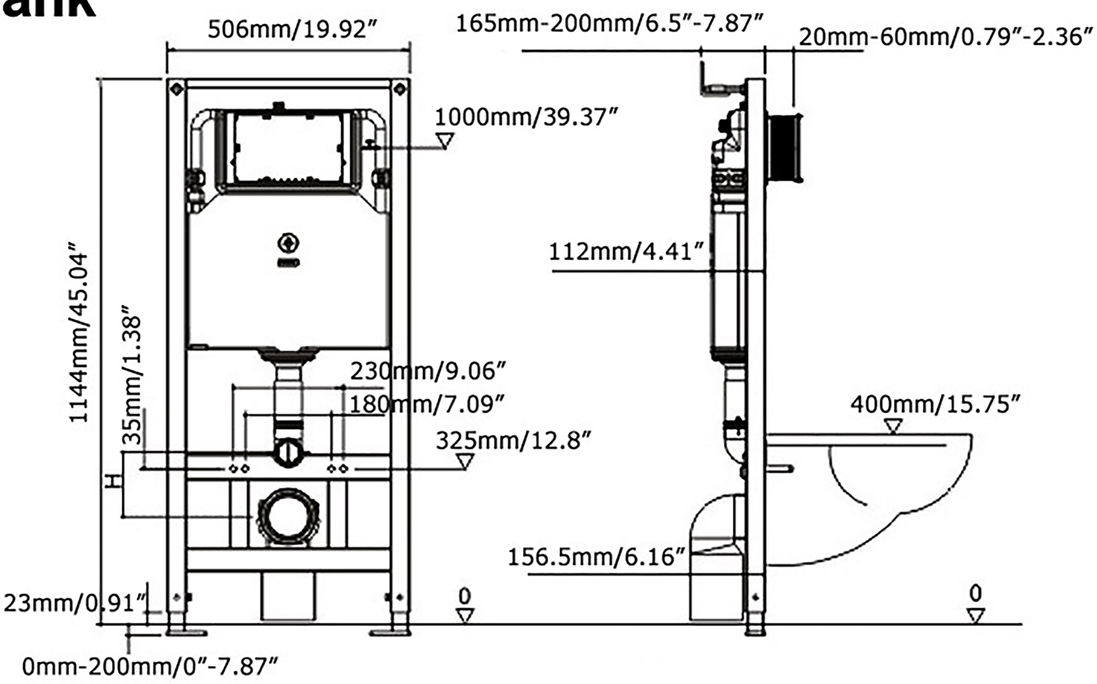
Tank