Relays

SIP6 Series

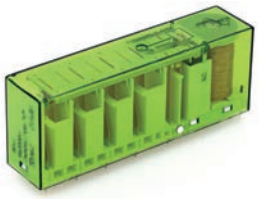

Features

- Relay with forcibly guided contacts according to IEC 61810-3
- Application type A
- Protective separation (see insulation data)
- Suitable for print mounting
- High switching capacity
- Contact assembly
  SIP512: 5 NO + 1 NC, SIP422: 4 NO + 2 NC

Dimensions

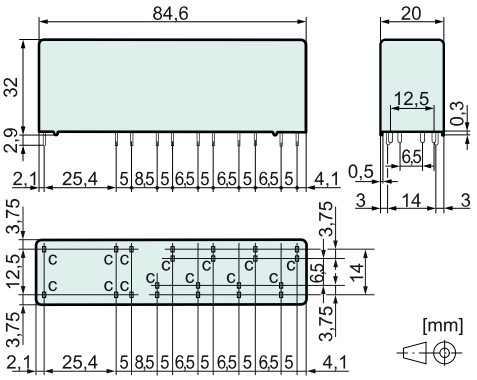

Pin dimension c	1,0 x 0,4 mm
Recommended drilling on PCB	Ø 1,3 mm

Coil data at 20 °C

Nominal power (typ.)	1,3 W
Holding power (typ.)	0,39 W
Coil limit temperature	125 °C

Nominal voltage (VDC)	Min. Pick-up voltage (VDC)	Min. Drop-out voltage (VDC)	Nominal current (mA)	Resistance (Ohm)
5,0	3,5	0,5	260	19 (1 ± 10 %)
12,0	8,4	1,2	109	110 (1 ± 10 %)
18,0	12,6	1,8	72	248 (1 ± 10 %)
24,0	16,8	2,4	55	440 (1 ± 10 %)
48,0	33,6	4,8	27	1 760 (1 ± 10 %)
60,0	42,0	6,0	22	2 750 (1 ± 10 %)
110,0	77,0	11,0	12	9 250 (1 ± 13 %)
220,0	154,0	22,0	6	37 000 (1 ± 15 %)

Excitation voltage range

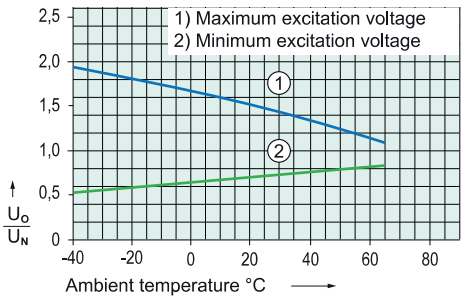

Test conditions:
- Graph 1: Contact current
  contacts 11-12, 21-22, 23-24: 4 A MAX,
  contacts 33-34, 43-44, 53-54, 63-64: 12 A MAX
- Graph 2: without previous operation
- Free-standing relay on PCB
- Duty cycle 100%

Contact data

Contact resistance as new (max.)	100 mΩ
Contact data apply to contacts	*11-12, 21-22, 23-24*
Contact material	$AgSnO_2$ + 0,2, ..., 0,4 µm Au
Contact type	crown contact
Rated switching power 250 V / 6 A / AC-1 (max.)	1 500 VA
Electr. life time (0,1 Hz, rel. duty cycle 10%)	100 000
Inrush current	15 A for 20 ms
Switching voltage range	5, ..., 250 V DC / AC
Switching current range*	5 mA, ..., 6 A
Switching power range*	60 mW, ..., 1 500 W (VA)
Short circuit resistance of contacts**	1 000 A
with pre-fuse	SCPD 6 A gG / gL (fuse)
Electrical life, Switching capacity, Continuous current	see SIR8 series
Contact data apply to contacts	*33-34, 43-44, 53-54, 63-64*
Contact material	$AgSnO_2$
Contact type	single contact
Rated switching power 250 V(400 V / 16 A / AC-1 (max.)	4 000 VA
Electr. life time (0,1 Hz, rel. duty cycle 10%)	250 000
Inrush current	60 A for 20 ms
Switching voltage range	5, ..., 250 V DC (480 V AC)
Switching current range*	10 mA, ..., 16 A
Switching power range*	120 mW, ..., 4 000 W (VA)
Short circuit resistance of contacts**	1 000 A
with pre-fuse	SCPD 16 A gG / gL (fuse)

* Reference values ** Prospective short-circuit current

Electrical life (NO contacts)

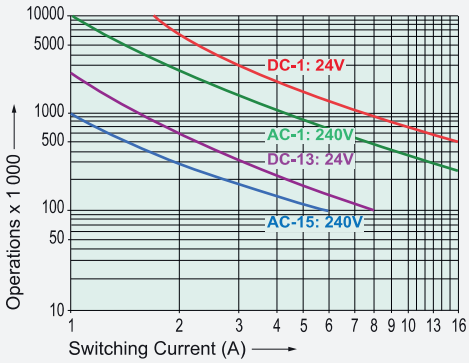

Switching capacity (IEC 61810-1)	
AC-1:	240 V / 16 A MAX
AC-15:	240 V / 6 A MAX
DC-1:	24 V / 16 A MAX
DC-13:	24 V / 8 A / 0,1 Hz MAX
Switching capacity (UL 508)	A600, R150
Continuous current per contact at load of:	
1 or 2 contacts	16 A MAX
3 contacts	12 A MAX
4 contacts	10 A MAX

Contact load limit curve (DC)

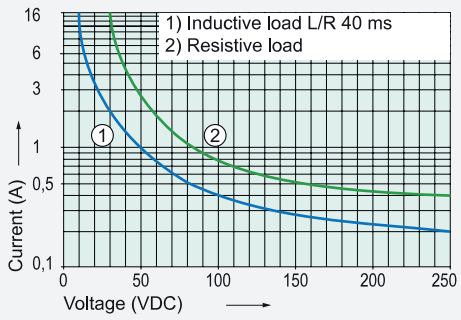

Circuit diagram (top view)

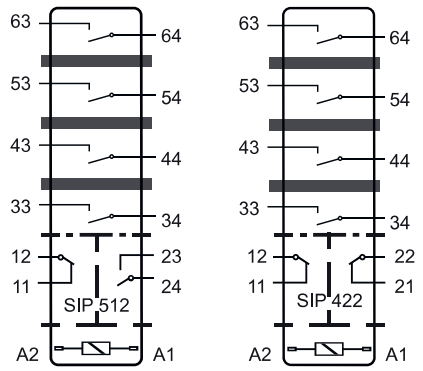

Insulation data

Rated insulation voltage (IEC 60664-1)	250 VAC
Basic insulation	
- Air and creepage distance (min.)	4 mm
- Test voltage	2 500 V_{rms} / 1 min
Double or reinforced insulation	
- Air and creepage distance (min.)	8 mm
- Test voltage	4 000 V_{rms} / 1 min
Double or reinforced insulation	
- Air and creepage distance (min.)	10 mm
- Test voltage	5 000 V_{rms} / 1 min
Open contact: Test voltage*	1 500 V_{rms} / 1 min
Creepage resistance	CTI 250
Pollution degree	2
Overvoltage category	III
Insulation resistance (min.)	100 MΩ
- Test voltage	500 VDC

* Initial value

Mechanical data

Mechanical lifetime (min.)	10 x 10^6 operations
Switching frequency (max.)	15 Hz
Response time (NO closed) (typ.)	18 ms
Drop-out time (NC closed) (typ.)*	5 ms
Bounce time (typ.)	NO: 8 ms / NC: 12 ms
Shock resistance (16 ms) (min.)	NO: 10g / NC: 8g
Vibr. resistance (10-200 Hz) (min.)	NO: 10g / NC: 3,5g
Weight	approx. 60 g
Mounting position	any
Mounting distance (min.)	5 mm

* without coil wiring

Technical data

Ambient temperature	-40 °C, ..., +70 °C
Thermal resistance	40 K / W
Protection class	RT II
Solder bath temperature	270 °C / 5 s
Test method (heating)	A (group assembly)
Approvals	cULus, TÜV
Flammability class	UL 94 V-0
UL File	E188 953 Sec. 4

Options, Accessories

Other coil designs	possible
Coils accord. to EN 50155 (railway applications)	possible

Product key

SIP 4 2 2 24VDC XX

SIP	Type designation	
4	Number of contacts NO	
2	Number of contacts NC	
2	Connection technology	2 = Solder terminals
24VDC	Nominal coil voltage	
XX	Options	

JAXXEN incorporated
350 Milford Point Rd. Milford, CT 06460 P.203-878-0400 F.203-878-0458
www.jaxxeninc.com info@jaxxeninc.com

ELESTA GmbH, Heuteilstrasse 18, CH - 7310 Bad Ragaz, Switzerland
Phone: +41 81 303 54 00
Worldwide: www.elesta-gmbh.com

© Copyright 12/2021