LUXSOLAR

PV combiner box

Solutions Catalogue

SCAN FOR CATALOG 04

For the content contained in this manual, Gandian Lightning Protection has the final right to interpret. For more detailed information, please inquire; our company's technical engineers will serve you wholeheartedly. Because of the continuous innovation of product technology, please refer to the actual product or the manual; Subject to change without notice.

Use environmentally friendly materials

+36 30 122 4862 INFO@LUXSOLAR.HU WWW.LUXSOLAR.HU LUXSOLAR MAGYARORSZÁG KFT.

ISO CQC CE CB RoHS TÜV Rheinland GA&DA

www.luxsolar.hu

GA&DA

Gandianfanglei

Better life, better electricity

不辜负每一份电力，让电尽其所能

VIZIOTÓL A KIVITELEZÉSIG | FROM VISION TO EXECUTION

GANDIAN LANGYONG

有品质才有市场，有改进才有进步，有创新才有发展

坚守专业与责任，做行业的领跑者

Stick to professionalism and responsibility
and be the leader of the industry

ISO | CQC | CE | CB | RoHS | TÜV Rheinland

LUXSOLAR

Gandian Lightning Protection Electric Co., Ltd. is a modern high-tech enterprise dedicated to the design, research and development, production, sales and service of lightning safety protection e-quipment. The company is located in the economic and technolo-gical development zone of Jiujiang City, the only international trade port city in Jiangxi Province.The total plant construction area is 39,960 square meters, the factory covers an area of 29970.16 square meters, and there are more than 200 employees.

Through continuous reform and innovation, the company develops its own brand, showing a new look of internationalization, modernization and informationization. Break through high-end industries with focus, upgrade traditional industries with automation, actively build automated electrical equipment bases, gather a team of highly skilled experts, strengthen the simultaneous development of advanced equipment industry and modern service industry, have a variety of fully functional product performance testing laboratories, 8/20us 150kA compatible with 10/350us 25kA simulated lightning laboratory, 10/350us 120kA simulated lightning laboratory, 1.2/50us combined wave generator, 1.2/50us voltage generator, gap, discharge tube detector, thermal stability test System, lightning online monitoring system, intelligent lightning protection detection system, SPD backup protector power frequency current test, lightning non-trip current test system and a series of advanced detection equipment, to ensure the stability and innovation of our products!

Independently develop a number of advanced production and processing automatic assembly lines, which integrate automatic glue filling, Independently develop a number of advanced production and processing automatic assembly lines, which integrate automatic glue filling, automatic soldering, automatic laminating, pad printing, laser marking, automatic detection and uploading of data, automatic sealing and packaging and other automatic equipment to ensure each product Consistency, fully guarantee efficient production and high-quality management, with unified planning of logistics, production, life and other service facilities, and strive to build a first-class intelligent production industrial base with international competitiveness.

The company took the lead in passing ISO9001 quality system certification, ISO14001 environmental management system certification, OHSAS18001 occupational health and safety management system, CQC certification, European Community CE certification, TUV Rheinland certification, CB certification, Rohs certification, and established a system from software and hardware. A strict quality management system can meet the various needs of new and old customers with the fastest speed, the best products, and the best services; sales points are set up throughout the country, and the sales scope radiates to all provinces in China, Southeast Asia, South America, and Europe , Africa and many other places, the service scope is all over the country, and the high-quality products and good service have won the favor of the majority of customers.

The main products are power surge protector series, smart lightning protection series, smart surge protector series, smart lightning pro- The main products are power surge protector series, smart lightning protection series, smart surge protector series, smart lightning protection box series, signal lightning protection series, fuses, circuit breakers, photovoltaic connectors, transfer switches, photovoltaic cables Wait. The products are mainly used in the construction of urban and rural power grids, urban infrastructure construction, factory construction stages, major domestic and foreign oil fields, petrochemical companies, shipbuilding industry, offshore oil drilling platforms, military power construction, photovoltaic power generation, wind power generation, coal, petroleum , Chemical, industrial and mining, hospitals, airports and other fields.

The company adheres to the corporate culture of "integrity first, happiness in the world, sharing and win-win", adheres to the spirit of "pragmatism, hard work, and dedication", and has the dream of "revitalizing national industry and assuming social morality". With the principle of trust, persist in realizing the new situation of "sustainable development, cooperative innovation", with the attitude of "professional, dedicated, rigorous, and eager to learn", always practice the glorious mission of "based on Rael Dunwei and build a world brand together" .

LUXSOLAR
WWW.LUXSOLAR.HU
GA&DA

Staff living area

The staff living area has 4360 square meters, 42 single rooms, 28 suites, supporting internal canteen, fitness area, outdoor activity area

Stamping and injection molding area

The stamping and injection molding area has 6800 square meters, 30 injection molding machines, 7 45T stamping machines, 5 35T stamping —achines, 8 25 stamping machines, and the remaining 18 stamping machines of each tonnage

Comprehensive production area

The comprehensive production area has 8,100 square meters, dozens of production lines for various products , a simulation laboratory for lightning strikes, and various lightning protection products test instruments, etc.

实验设备 Laboratory And Testing

Lab 1

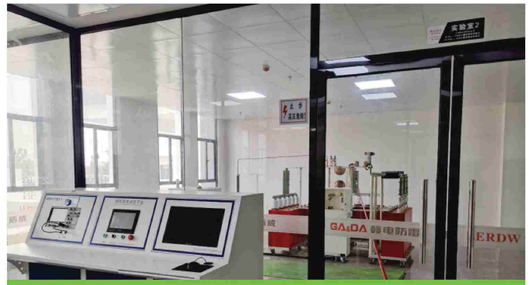
Lab 2

Lab 3

R&D Center No. 1

R&D Center No. 2

Glow Wire Tester

SPD thermal stability test system

Coupling and decoupling online cabinet

1.2/50μs combined wave generator

Programmable salt spray test machine

Simulated lightning test platform

Programmable constant temperature and humidity test chamber

1.2/50μs voltage wave generator

GA&DA
LUXSOLAR
WWW.LUXSOLAR.HU

证书 Certificate And International Patents

ISO14001

ISO9001

OHSAS18001

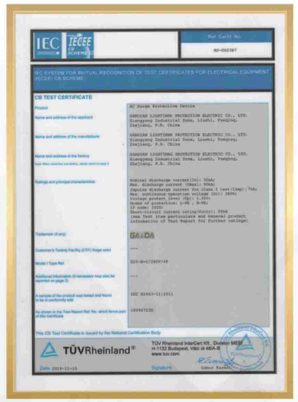
CB

CQC

RoHS

TUV-CE

TUV

CE

GDS-PV1/1 DC COMBINER BOX

- GDS-PV1/1 combiner box is suitable for inverter (MAX input voltage DC500V/DC1000V/DC1200V /DC1500V, 1 PV input channel, 1 output channel, single MPPT inverter).Box body is made of PVC engineering materials, with test for fire retardant. temperature rise,anti impact, anti ultraviolet and other testing. IP65 protection grade.

- High reliability
  With DC FUSE
  With DC Surge Protection Device
  With DC circuit breaker or DC load isolation switch.
- Strong adaptability
  IP65 design, waterproof, anti dust and anti ultraviolet. Strict test for high And low temperature, used widely.
  The simple installation, the simplified system wiring, the convenient wiring.
  The box body is made of cold rolled steel and other metal materials.
- Flexible configuration
  Used for single crystal silicon solar modules, polycrystalline silicon solar modules, thin film solar modules. Current rating of the photovoltaic fuse,circuit breaker, load isolation switch is modified.

Configuration diagram

Type	GDS-PV1/1-DC500	GDS-PV1/1-DC1000	
Electric paramenter			
Order Code	250001	250002	
System maximum dc voltage	500V DC	1000V DC	
Maximum input current for each string	15A		
Maximum input strings	1		
Maximum output switch current	16/20A		
Number of inverter MPPT	1		
Number of output strings	1		
Lightning protection			
SPD according to EN 61643-11 / IEC 61643-11	Type 2/Class II /T2		
Type	G2040PV/500-2P	G2040PV/1000-2P	G2040PV/1000-3P
Max. PV voltage (d.c.) (Ucpv)	500V DC	1000V DC	1000V DC
Nominal discharge current (8/20 μs) (In)	20kA		
Max. discharge current (8/20 μs) (Imax)	40kA		
Voltage protection level (Up)	≤2.5kV	≤4.0kV	≤4.0kV
Poles	2P	2P	3P
System			
Protection garde	IP65		
Output swich	DC MCB(optional)/DC isolation switch(standard)		
Waterproof Connectors	PG/MC4		
PV DC FUSE	Standard		
Monitoring module	Optional		
Preventing diode	Optional		
Box material	PVC/irony		
Installation method	Wall mounting type		
Operating Temperature	−25 °C … +55 °C		
Elevation of Temperature	2km		
Permissible relative humidity	0-95%,no condensation		

DC COMBINER BOX/For Power Supply System
LUXSOLAR

GDS-PV1/1 DC COMBINER BOX

- GDS-PV1/1 combiner box is suitable for inverter (MAX input voltage DC500V/DC1000V/DC1200V /DC1500V, 1 PV input channel, 1 output channel, single MPPT inverter).Box body is made of PVC engineering materials, with test for fire retardant. temperature rise,anti impact, anti ultraviolet and other testing. IP65 protection grade.

Configuration diagram

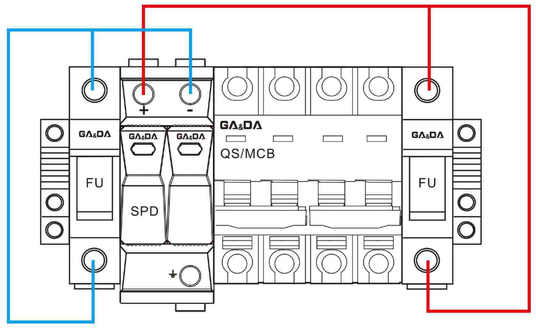

DC500/1000

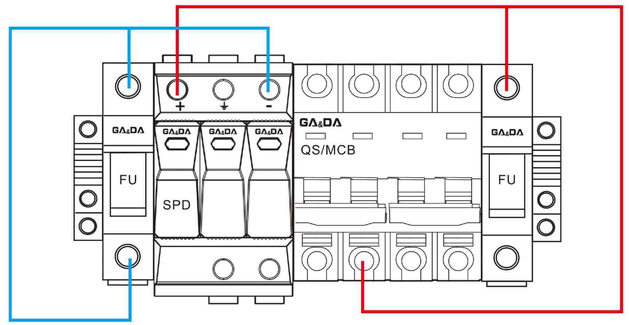

DC1000V

Schematic

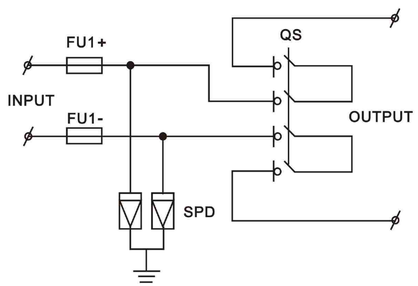

DC500/1000

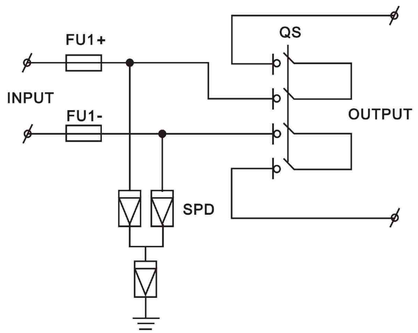

DC1000

GDS-PV2/1 DC COMBINER BOX

- GDS-PV2/1 combiner box is suitable for inverter (MAX input voltage DC500V/DC1000V/DC1200V /DC1500V, 2 PV input channel, 1 output channel, single MPPT inverter).Box body is made of PVC engineering materials, with test for fire retardant. temperature rise,anti impact, anti ultraviolet and other testing. IP65 protection grade.

- High reliability
  With DC FUSE
  With DC Surge Protection Device
  With DC circuit breaker or DC load isolation switch.
- Strong adaptability
  IP65 design, waterproof, anti dust and anti ultraviolet. Strict test for high And low temperature, used widely.
  The simple installation, the simplified system wiring, the convenient wiring.
  The box body is made of cold rolled steel and other metal materials.
- Flexible configuration
  Used for single crystal silicon solar modules, polycrystalline silicon solar modules, thin film solar modules. Current rating of the photovoltaic fuse,circuit breaker, load isolation switch is modified.

Configuration diagram

Type	GDS-PV2/1-DC500	GDS-PV2/1-DC1000	
Electric paramenter			
Order Code	250003	250004	
System maximum dc voltage	500V DC	1000V DC	
Maximum input current for each string	15A		
Maximum input strings	2		
Maximum output switch current	20/32A		
Number of inverter MPPT	1		
Number of output strings	1		
Lightning protection			
SPD according to EN 61643-11 / IEC 61643-11	Type 2/Class II /T2		
Type	G2040PV/500-2P	G2040PV/1000-2P	G2040PV/1000-3P
Max. PV voltage (d.c.) (Ucpv)	500V DC	1000V DC	1000V DC
Nominal discharge current (8/20 μs) (In)	20kA		
Max. discharge current (8/20 μs) (Imax)	40kA		
Voltage protection level (Up)	⩽2.5kV	⩽4.0kV	⩽4.0kV
Poles	2P	2P	3P
System			
Protection garde	IP65		
Output swich	DC MCB(optional)/DC isolation switch(standard)		
Waterproof Connectors	PG/MC4		
PV DC FUSE	Standard		
Monitoring module	Optional		
Preventing diode	Optional		
Box material	PVC/irony		
Installation method	Wall mounting type		
Operating Temperature	−25 °C … +55 °C		
Elevation of Temperature	2km		
Permissible relative humidity	0-95%,no condensation		

DC COMBINER BOX/For Power Supply System
LUXSOLAR

GDS-PV2/1 DC COMBINER BOX

- GDS-PV2/1 combiner box is suitable for inverter (MAX input voltage DC500V/DC1000V/DC1200V /DC1500V, 2 PV input channel, 1 output channel, single MPPT inverter).Box body is made of PVC engineering materials, with test for fire retardant. temperature rise,anti impact, anti ultraviolet and other testing. IP65 protection grade.

Configuration diagram

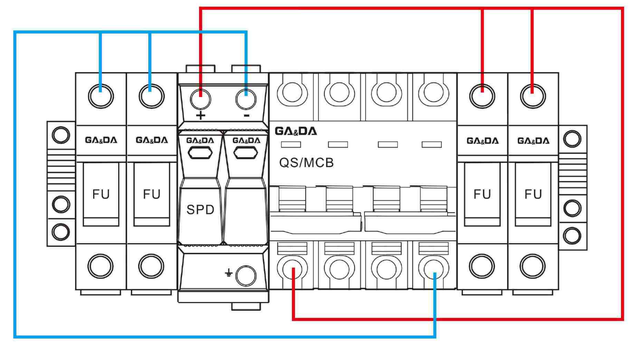

DC500/1000

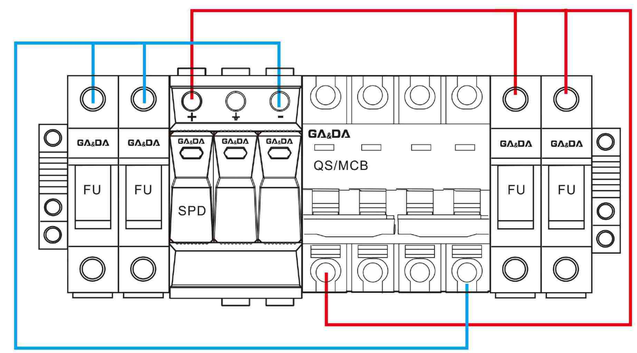

DC1000

Schematic

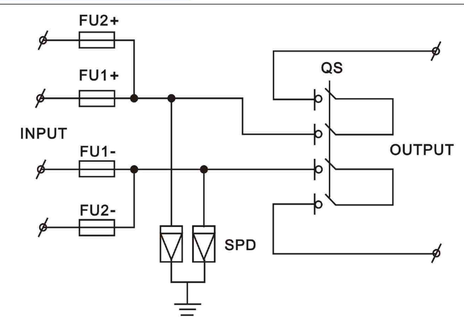

DC500/1000

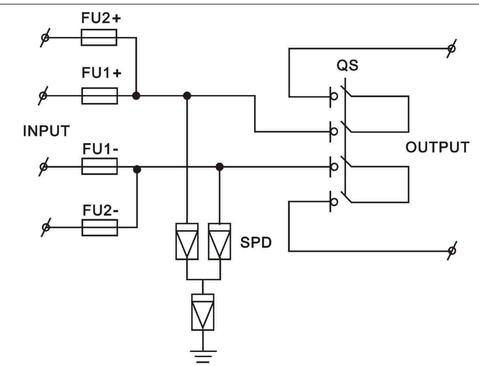

DC1000

GDHLX-PV3/1 DC COMBINER BOX

- GDS-PV3/1 combiner box is suitable for inverter (MAX input voltage DC500V/DC1000V/DC1200V /DC1500V, 3 PV input channel, 1 output channel, single MPPT inverter).Box body is made of PVC engineering materials, with test for fire retardant. temperature rise,anti impact, anti ultraviolet and other testing. IP65 protection grade.

- High reliability
  With DC FUSE
  With DC Surge Protection Device
  With DC circuit breaker or DC load isolation switch.
- Strong adaptability
  IP65 design, waterproof, anti dust and anti ultraviolet. Strict test for high And low temperature, used widely.
  The simple installation, the simplified system wiring, the convenient wiring.
  The box body is made of cold rolled steel and other metal materials.
- Flexible configuration
  Used for single crystal silicon solar modules, polycrystalline silicon solar modules, thin film solar modules. Current rating of the photovoltaic fuse,circuit breaker, load isolation switch is modified.

Configuration diagram

Type	GDS-PV3/1-DC500	GDS-PV3/1-DC1000	
Electric paramenter			
Order Code	250005	250006	
System maximum dc voltage	500V DC	1000V DC	
Maximum input current for each string	15A		
Maximum input strings	3		
Maximum output switch current	20/32A		
Number of inverter MPPT	1		
Number of output strings	1		
Lightning protection			
SPD according to EN 61643-11 / IEC 61643-11	Type 2/Class II /T2		
Type	G2040PV/500-2P	G2040PV/1000-2P	G2040PV/1000-3P
Max. PV voltage (d.c.) (Ucpv)	500V DC	1000V DC	1000V DC
Nominal discharge current (8/20 μs) (In)	20kA		
Max. discharge current (8/20 μs) (Imax)	40kA		
Voltage protection level (Up)	⩽2.5kV	⩽4.0kV	⩽4.0kV
Poles	2P	2P	3P
System			
Protection garde	IP65		
Output swich	DC MCB(optional)/DC isolation switch(standard)		
Waterproof Connectors	PG/MC4		
PV DC FUSE	Standard		
Monitoring module	Optional		
Preventing diode	Optional		
Box material	PVC/irony		
Installation method	Wall mounting type		
Operating Temperature	−25 °C … +55 °C		
Elevation of Temperature	2km		
Permissible relative humidity	0-95%,no condensation		

DC COMBINER BOX/For Power Supply System

GDS-PV3/1 DC COMBINER BOX

- GDS-PV3/1 combiner box is suitable for inverter (MAX input voltage DC500V/DC1000V/DC1200V /DC1500V, 3 PV input channel, 1 output channel, single MPPT inverter).Box body is made of PVC engineering materials, with test for fire retardant. temperature rise,anti impact, anti ultraviolet and other testing. IP65 protection grade.

Configuration diagram

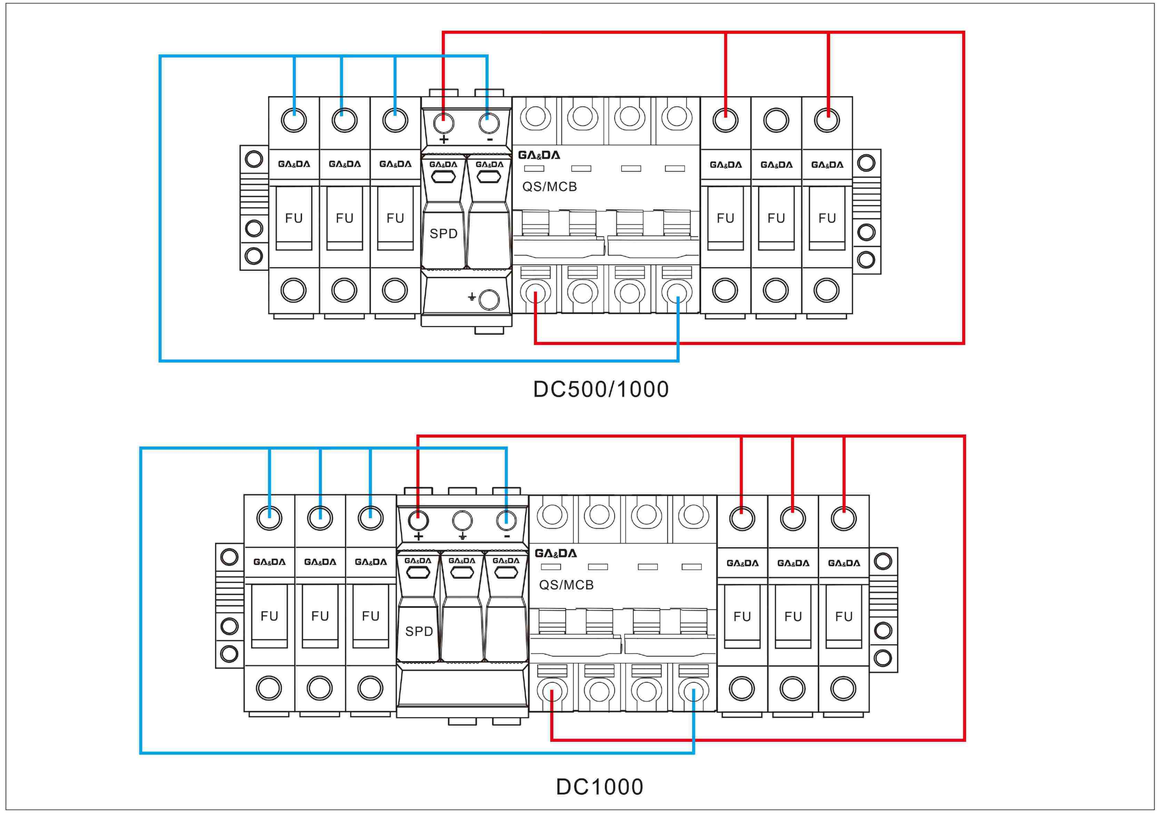

Schematic

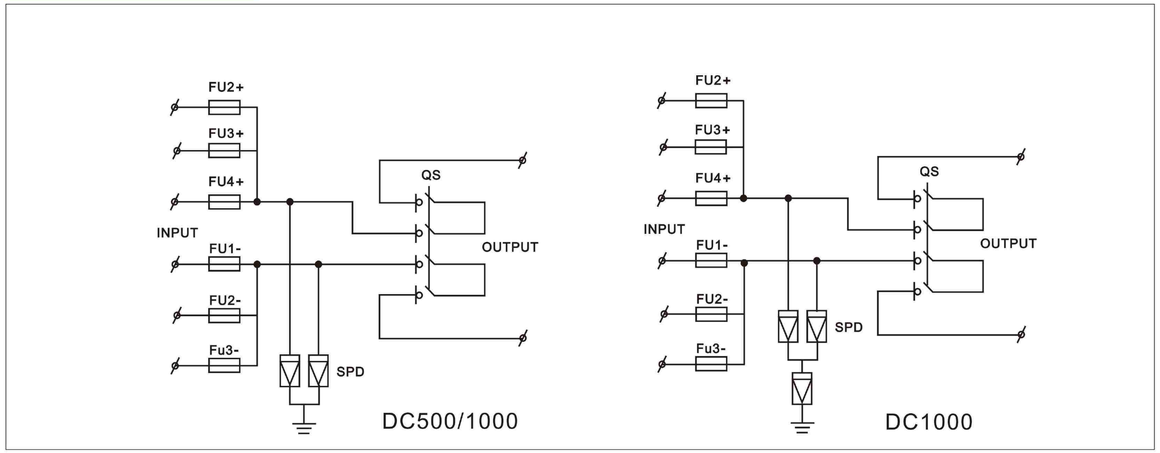

GDS-PV4/1 DC COMBINER BOX

- GDHLX-PV4/1 combiner box is suitable for inverter (MAX input voltage DC500V/DC1000V/DC1200V /DC1500V, 4 PV input channel, 1 output channel, single MPPT inverter).Box body is made of PVC engineering materials, with test for fire retardant. temperature rise,anti impact, anti ultraviolet and other testing. IP65 protection grade.

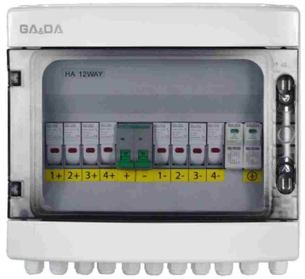

- High reliability
  With DC FUSE
  With DC Surge Protection Device
  With DC circuit breaker or DC load isolation switch.
- Strong adaptability
  IP65 design, waterproof, anti dust and anti ultraviolet. Strict test for high And low temperature, used widely.
  The simple installation, the simplified system wiring, the convenient wiring.
  The box body is made of cold rolled steel and other metal materials.
- Flexible configuration
  Used for single crystal silicon solar modules, polycrystalline silicon solar modules, thin film solar modules. Current rating of the photovoltaic fuse,circuit breaker, load isolation switch is modified.

Configuration diagram

Type	GDS-PV4/1-DC500	GDS-PV4/1-DC1000	
Electric paramenter			
Order Code	250007	250008	
System maximum dc voltage	500V DC	1000V DC	
Maximum input current for each string	15A		
Maximum input strings	4		
Maximum output switch current	50/63A		
Number of inverter MPPT	1		
Number of output strings	1		
Lightning protection			
SPD according to EN 61643-11 / IEC 61643-11	Type 2/Class II /T2		
Type	G2040PV/500-2P	G2040PV/1000-2P	G2040PV/1000-3P
Max. PV voltage (d.c.) (Ucpv)	500V DC	1000V DC	1000V DC
Nominal discharge current (8/20 μs) (In)	20kA		
Max. discharge current (8/20 μs) (Imax)	40kA		
Voltage protection level (Up)	⩽2.5kV	⩽4.0kV	⩽4.0kV
Poles	2P	2P	3P
System			
Protection garde	IP65		
Output swich	DC MCB(optional)/DC isolation switch(standard)		
Waterproof Connectors	PG/MC4		
PV DC FUSE	Standard		
Monitoring module	Optional		
Preventing diode	Optional		
Box material	PVC/irony		
Installation method	Wall mounting type		
Operating Temperature	−25 °C … +55 °C		
Elevation of Temperature	2km		
Permissible relative humidity	0-95%,no condensation		

DC COMBINER BOX/For Power Supply System
LUXSOLAR

GDS-PV4/1 DC COMBINER BOX

- GDHLX-PV4/1 combiner box is suitable for inverter (MAX input voltage DC500V/DC1000V/DC1200V /DC1500V, 4 PV input channel, 1 output channel, single MPPT inverter).Box body is made of PVC engineering materials, with test for fire retardant. temperature rise,anti impact, anti ultraviolet and other testing. IP65 protection grade.

Configuration diagram

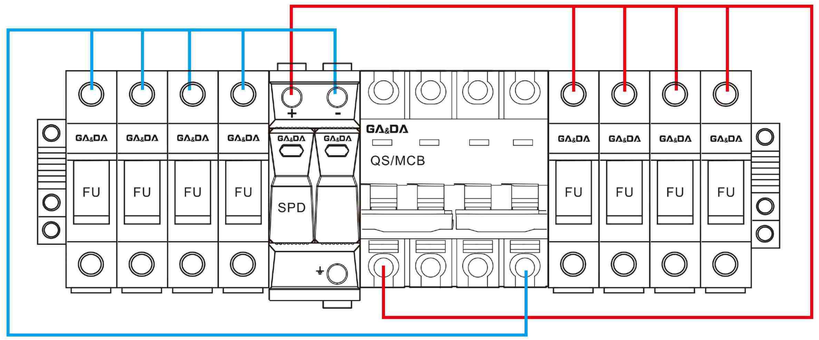

DC500/1000

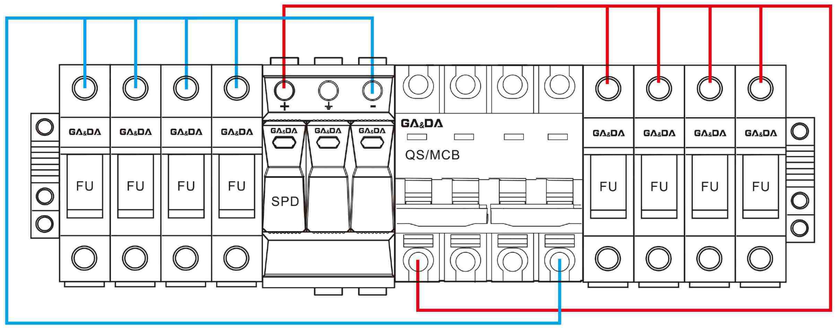

DC1000

Schematic

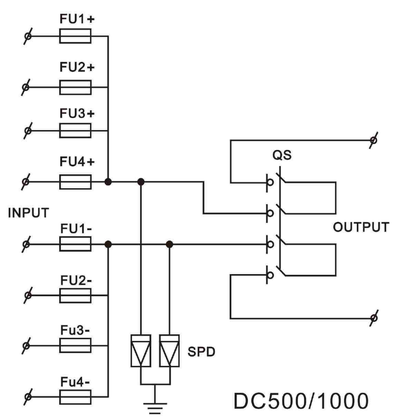

DC500/1000

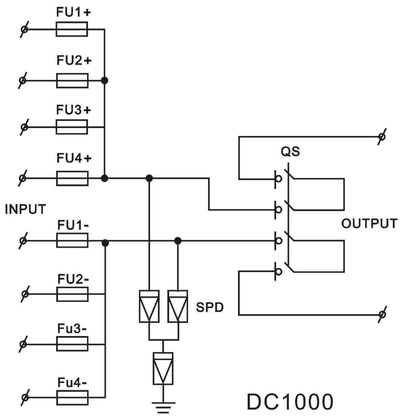

DC1000

GDS-PV6/1 DC COMBINER BOX

- GDS-PV6/1 combiner box is suitable for inverter (MAX input voltageDC1000V/DC1200V/DC1500V, 6 PV input channel, 1output channel, single MPPT inverter).Box body is made of PVC engineering aterials, with test for fire retardant. temperature rise,anti impact, anti ultraviolet and other testing.

ISO CQC CE CB RoHS TÜV

- High reliability
  With DC FUSE
  With DC Surge Protection Device
  With DC circuit breaker or DC load isolation switch.
- Strong adaptability
  IP65 design, waterproof, anti dust and anti ultraviolet. Strict test for high And low temperature, used widely.
  The simple installation, the simplified system wiring, the convenient wiring.
  The box body is made of cold rolled steel and other metal materials.
- Flexible configuration
  Used for single crystal silicon solar modules, polycrystalline silicon solar modules, thin film solar modules. Current rating of the photovoltaic fuse,circuit breaker, load isolation switch is modified.

Configuration diagram

Type	GDS-PV6/1-DC500	GDS-PV6/1-DC1000	
Electric paramenter			
Order Code	250009	250010	
System maximum dc voltage	500V DC	1000V DC	
Maximum input current for each string	15A		
Maximum input strings	6		
Maximum output switch current	50/63A		
Number of inverter MPPT	1		
Number of output strings	1		
Lightning protection			
SPD according to EN 61643-11 / IEC 61643-11	Type 2/Class II /T2		
Type	G2040PV/500-2P	G2040PV/1000-2P	G2040PV/1000-3P
Max. PV voltage (d.c.) (Ucpv)	500V DC	1000V DC	1000V DC
Nominal discharge current (8/20 μs) (In)	20kA		
Max. discharge current (8/20 μs) (Imax)	40kA		
Voltage protection level (Up)	≤2.5kV	≤4.0kV	≤4.0kV
Poles	2P	2P	3P
System			
Protection garde	IP65		
Output swich	DC MCB(optional)/DC isolation switch(standard)		
Waterproof Connectors	PG/MC4		
PV DC FUSE	Standard		
Monitoring module	Optional		
Preventing diode	Optional		
Box material	PVC/irony		
Installation method	Wall mounting type		
Operating Temperature	−25 °C … +55 °C		
Elevation of Temperature	2km		
Permissible relative humidity	0-95%,no condensation		

DC COMBINER BOX/For Power Supply System
LUXSOLAR

GDS-PV6/1 DC COMBINER BOX

- GDS-PV6/1 combiner box is suitable for inverter (MAX input voltageDC1000V/DC1200V/DC1500V, 6 PV input channel, 1 output channel, single MPPT inverter).Box body is made of PVC engineering aterials, with test for fire retardant. temperature rise,anti impact, anti ultraviolet and other testing.

ISO CQC CE CB RoHS TÜV

Configuration diagram

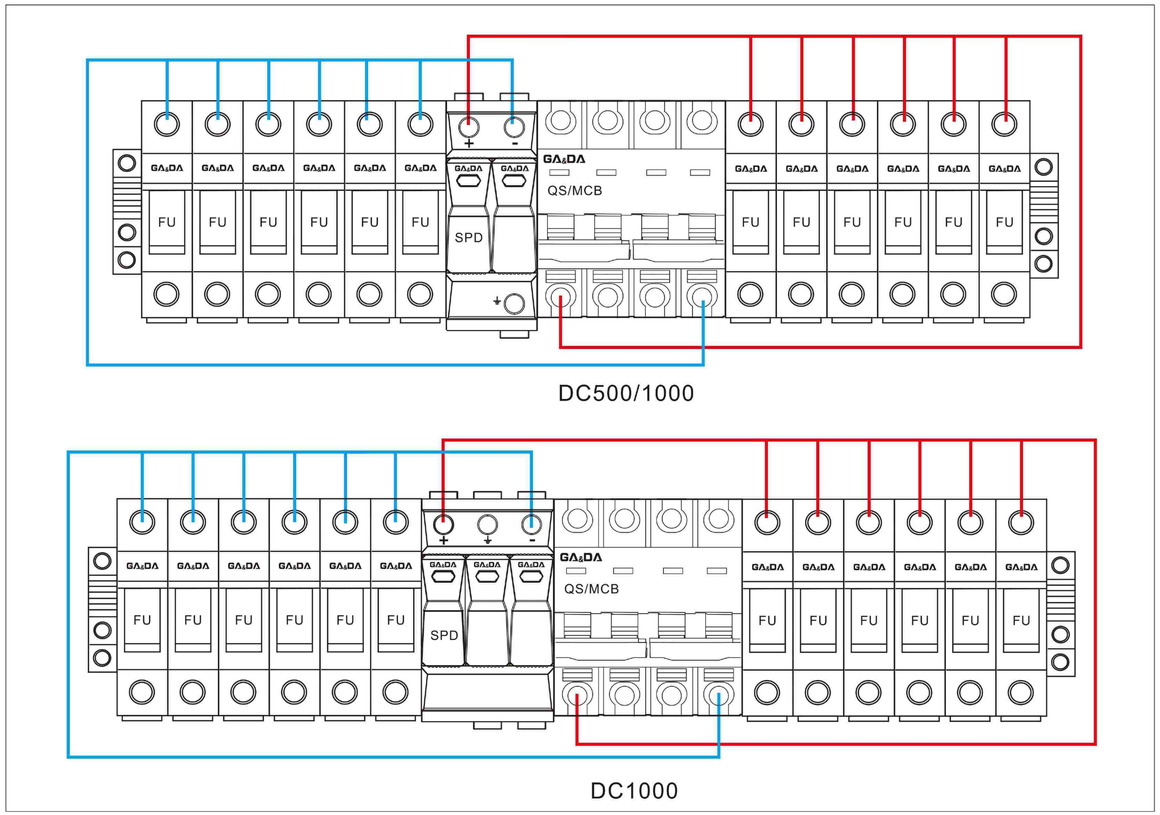

Schematic

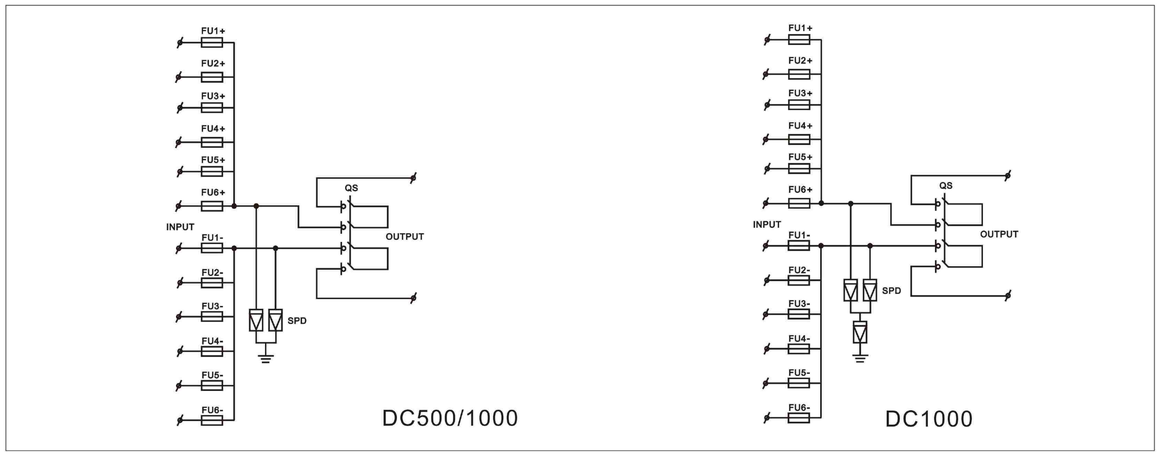

GDS-PV4/2 DC COMBINER BOX

- GDHLX-PV4/2 combiner box is suitable for inverter (MAX input voltage DC500V/DC1000V/DC1200V /DC1500V, 4 PV input channel, 2 output channel, single MPPT inverter).Box body is made of PVC e-ngineering materials, with test for fire retardant. temperature rise,anti impact, anti ultraviolet and ot-her testing. IP65 protection grade.

- High reliability
  With DC FUSE
  With DC Surge Protection Device
  With DC circuit breaker or DC load isolation switch.
- Strong adaptability
  IP65 design, waterproof, anti dust and anti ultraviolet. Strict test for high And low temperature, used widely.
  The simple installation, the simplified system wiring, the convenient wiring.
  The box body is made of cold rolled steel and other metal materials.
- Flexible configuration
  Used for single crystal silicon solar modules, polycrystalline silicon solar modules, thin film solar modules. Current rating of the photovoltaic fuse,circuit breaker, load isolation switch is modified.

Configuration diagram

Type	GDS-PV4/2-DC500		GDS-PV4/2-DC1000
Electric paramenter			
Order Code	250011		250012
System maximum dc voltage	500V DC		1000V DC
Maximum input current for each string	15A		
Maximum input strings	4		
Maximum output switch current	20/32A		
Number of inverter MPPT	2		
Number of output strings	2		
Lightning protection			
SPD according to EN 61643-11 / IEC 61643-11	Type 2/Class Ⅱ /T2		
Type	G2040PV/500-2P	G2040PV/1000-2P	G2040PV/1000-3P
Max. PV voltage (d.c.) (Ucpv)	500V DC	1000V DC	1000V DC
Nominal discharge current (8/20 μs) (In)	20kA		
Max. discharge current (8/20 μs) (Imax)	40kA		
Voltage protection level (Up)	≤2.5kV	≤4.0kV	≤4.0kV
Poles	2P	2P	3P
System			
Protection garde	IP65		
Output swich	DC MCB(optional)/DC isolation switch(standard)		
Waterproof Connectors	PG/MC4		
PV DC FUSE	Standard		
Monitoring module	Optional		
Preventing diode	Optional		
Box material	PVC/irony		
Installation method	Wall mounting type		
Operating Temperature	−25 °C … +55 °C		
Elevation of Temperature	2km		
Permissible relative humidity	0-95%,no condensation		

DC COMBINER BOX/For Power Supply System

GDS-PV4/2 DC COMBINER BOX

- GDHLX-PV4/2 combiner box is suitable for inverter (MAX input voltage DC500V/DC1000V/DC1200V /DC1500V, 4 PV input channel, 2 output channel, single MPPT inverter).Box body is made of PVC e-ngineering materials, with test for fire retardant. temperature rise,anti impact, anti ultraviolet and ot-her testing. IP65 protection grade.

Configuration diagram

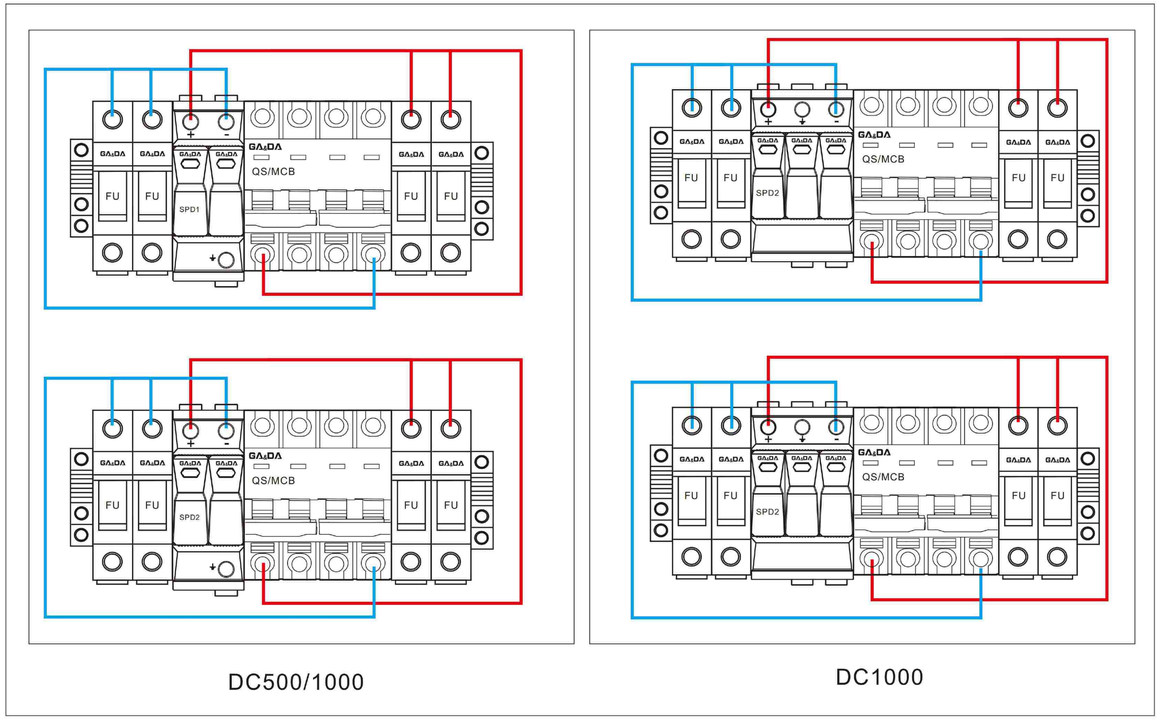

Schematic

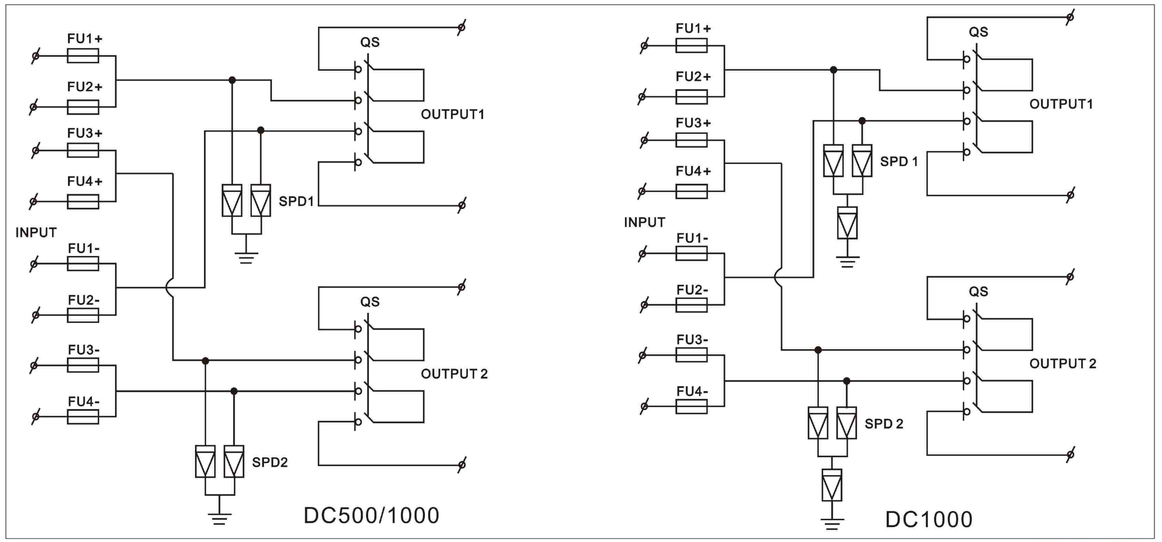

GDS-PV6/2 DC COMBINER BOX

- GDS-PV6/2 combiner box is suitable for inverter (MAX input voltageDC1000V/DC1200V/DC1500V, 6 PV input channel, 2output channel, single MPPT inverter).Box body is made of PVC engineering aterials, with test for fire retardant. temperature rise,anti impact, anti ultraviolet and other testing.

ISO CQC CE CB RoHS TÜV

- High reliability
  With DC FUSE
  With DC Surge Protection Device
  With DC circuit breaker or DC load isolation switch.
- Strong adaptability
  IP65 design, waterproof, anti dust and anti ultraviolet. Strict test for high And low temperature, used widely.
  The simple installation, the simplified system wiring, the convenient wiring.
  The box body is made of cold rolled steel and other metal materials.
- Flexible configuration
  Used for single crystal silicon solar modules, polycrystalline silicon solar modules, thin film solar modules. Current rating of the photovoltaic fuse,circuit breaker, load isolation switch is modified.

Configuration diagram

Type	GDS-PV6/2-DC500		GDS-PV6/2-DC1000
Electric paramenter			
Order Code	250013		250014
System maximum dc voltage	500V DC		1000V DC
Maximum input current for each string	15A		
Maximum input strings	6		
Maximum output switch current	32/40A		
Number of inverter MPPT	2		
Number of output strings	2		
Lightning protection			
SPD according to EN 61643-11 / IEC 61643-11	Type 2/Class II /T2		
Type	G2040PV/500-2P	G2040PV/1000-2P	G2040PV/1000-3P
Max. PV voltage (d.c.) (Ucpv)	500V DC	1000V DC	1000V DC
Nominal discharge current (8/20 μs) (In)	20kA		
Max. discharge current (8/20 μs) (Imax)	40kA		
Voltage protection level (Up)	⩽2.5kV	⩽4.0kV	⩽4.0kV
Poles	2P	2P	3P
System			
Protection garde	IP65		
Output swich	DC MCB(optional)/DC isolation switch(standard)		
Waterproof Connectors	PG/MC4		
PV DC FUSE	Standard		
Monitoring module	Optional		
Preventing diode	Optional		
Box material	PVC/irony		
Installation method	Wall mounting type		
Operating Temperature	−25 °C ... +55 °C		
Elevation of Temperature	2km		
Permissible relative humidity	0-95%,no condensation		

DC COMBINER BOX/For Power Supply System
LUXSOLAR

GDS-PV6/2 DC COMBINER BOX

- GDS-PV6/2 combiner box is suitable for inverter (MAX input voltageDC1000V/DC1200V/DC1500V, 6 PV input channel, 2output channel, single MPPT inverter).Box body is made of PVC engineering aterials, with test for fire retardant. temperature rise,anti impact, anti ultraviolet and other testing.

ISO CQC CE CB RoHS TÜV

Configuration diagram

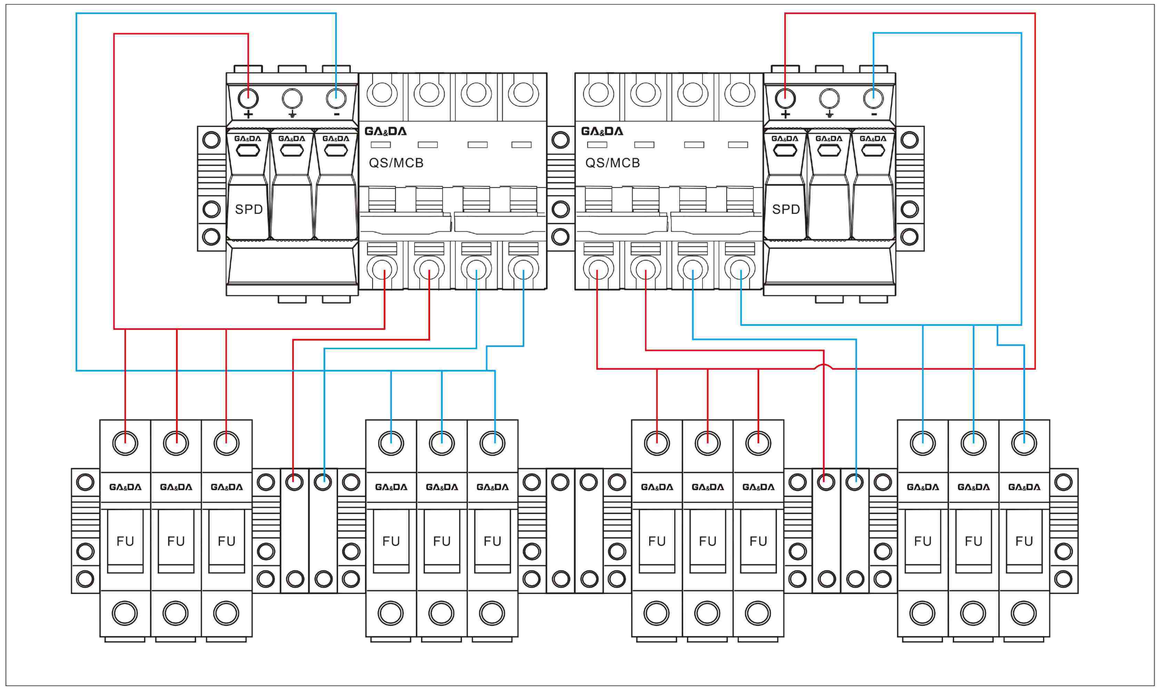

Schematic

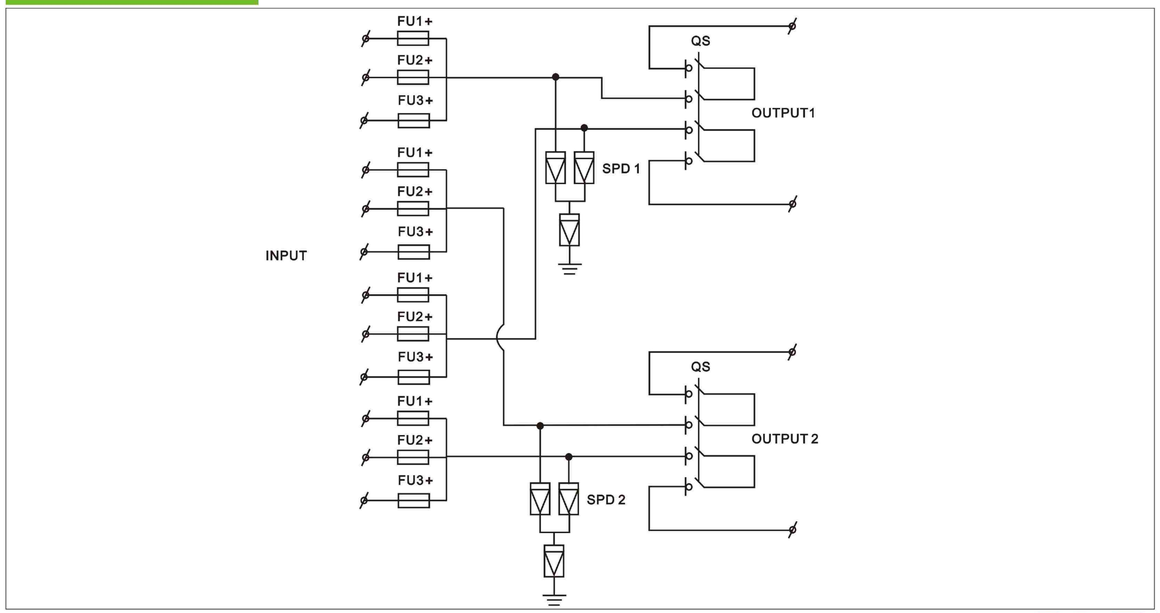

GDT-PV6/1 DC COMBINER BOX

- GDT-PV6/1 combiner box is suitable for inverter (MAX input voltageDC1000V/DC1200V/DC1500V, 6 PV input channel, 1output channel, single MPPT inverter).Box body is made of PVC engineering aterials, with test for fire retardant. temperature rise,anti impact, anti ultraviolet and other testing.

- High reliability
  With DC FUSE
  With DC Surge Protection Device
  With DC circuit breaker or DC load isolation switch.
- Strong adaptability
  IP65 design, waterproof, anti dust and anti ultraviolet. Strict test for high And low temperature, used widely.
  The simple installation, the simplified system wiring, the convenient wiring.
  The box body is made of cold rolled steel and other metal materials.
- Flexible configuration
  Used for single crystal silicon solar modules, polycrystalline silicon solar modules, thin film solar modules. Current rating of the photovoltaic fuse,circuit breaker, load isolation switch is modified.

Configuration diagram

Type	GDT-PV6/1-DC1000
Order Code	250015
Type(With communication function)	GDT-PV6/1-DC1000-FM
Order Code	250016
Electric paramenter	
System maximum dc voltage	1000V dc
Maximum input current for each string	15A
Maximum input strings	6
Maximum output switch current	63A
Number of inverter MPPT	N
Number of output strings	1
Lightning protection	
SPD according to EN 61643-11 / IEC 61643-11	Type 2/Class II /T2
Max. PV voltage (d.c.) (Ucpv)	1000V dc
Nominal discharge current (8/20 μs) (In)	20kA
Max. discharge current (8/20 μs) (Imax)	40kA
Voltage protection level (Up)	≤4.0kV
Poles	3P
System	
Protection garde	IP65
Output swich	DC MCB(optional)/DC isolation switch(standard)
Waterproof Connectors	PG/MC4
PV DC FUSE	Standard
PV SPD	Standard
Monitoring module	Optional
Preventing diode	Optional
Box material	iron
Installation method	Wall mounting type
Operating Temperature	−25 °C … +55 °C

DC COMBINER BOX/For Power Supply System

GDT-PV6/1 DC COMBINER BOX

- GDT-PV6/1 combiner box is suitable for inverter (MAX input voltageDC1000V/DC1200V/DC1500V, 6 PV input channel, 1 output channel, single MPPT inverter).Box body is made of PVC engineering aterials, with test for fire retardant. temperature rise,anti impact, anti ultraviolet and other testing.

Configuration diagram

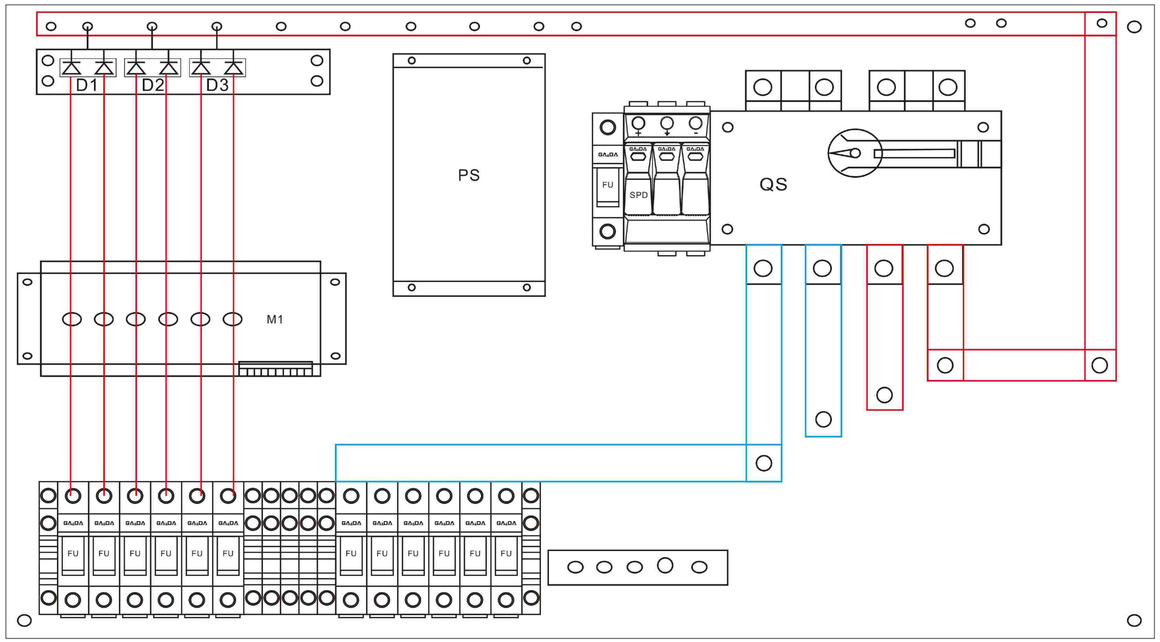

Schematic

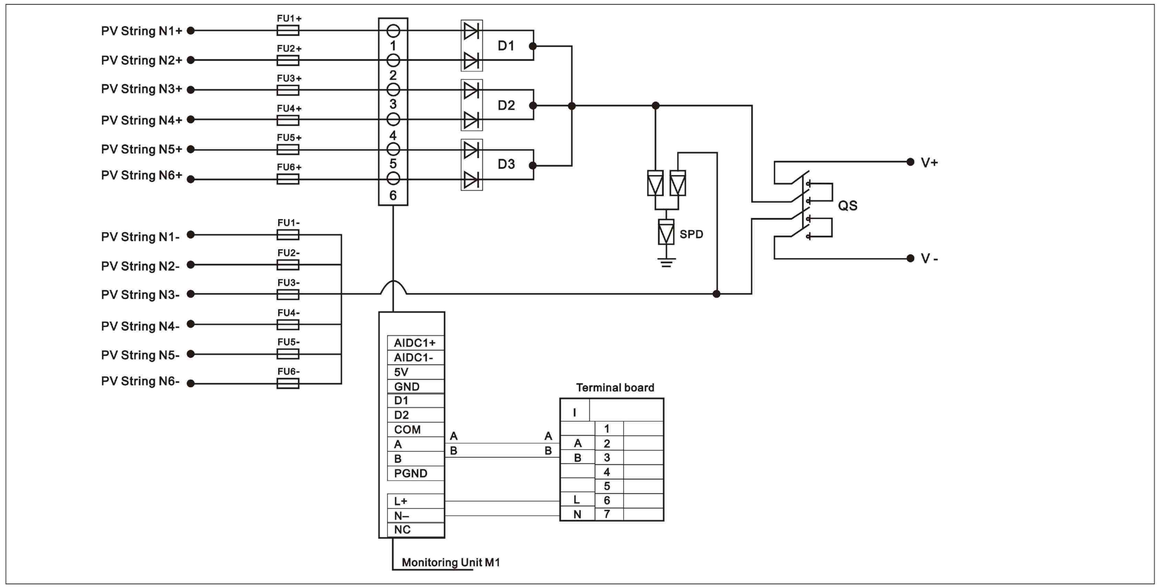

GDT-PV8/1 DC COMBINER BOX

- GDT-PV8/1 combiner box is suitable for inverter (MAX input voltageDC1000V/DC1200V/DC1500V, 8 PV input channel, 1output channel, single MPPT inverter).Box body is made of PVC engineering aterials, with test for fire retardant. temperature rise,anti impact, anti ultraviolet and other testing.

- High reliability
  With DC FUSE
  With DC Surge Protection Device
  With DC circuit breaker or DC load isolation switch.
- Strong adaptability
  IP65 design, waterproof, anti dust and anti ultraviolet. Strict test for high And low temperature, used widely.
  The simple installation, the simplified system wiring, the convenient wiring.
  The box body is made of cold rolled steel and other metal materials.
- Flexible configuration
  Used for single crystal silicon solar modules, polycrystalline silicon solar modules, thin film solar modules. Current rating of the photovoltaic fuse,circuit breaker, load isolation switch is modified.

Configuration diagram

Type	GDT-PV8/1-DC1000
Order Code	250017
Type(With communication function)	GDT-PV8/1-DC1000-FM
Order Code	250018
Electric paramenter	
System maximum dc voltage	1000V dc
Maximum input current for each string	15A
Maximum input strings	8
Maximum output switch current	125A
Number of inverter MPPT	N
Number of output strings	1
Lightning protection	
SPD according to EN 61643-11 / IEC 61643-11	Type 2/Class II /T2
Max. PV voltage (d.c.) (Ucpv)	1000V dc
Nominal discharge current (8/20 μs) (In)	20kA
Max. discharge current (8/20 μs) (Imax)	40kA
Voltage protection level (Up)	≤4.0kV
Poles	3P
System	
Protection garde	IP65
Output swich	DC MCB(optional)/DC isolation switch(standard)
Waterproof Connectors	PG/MC4
PV DC FUSE	Standard
PV SPD	Standard
Monitoring module	Optional
Preventing diode	Optional
Box material	iron
Installation method	Wall mounting type
Operating Temperature	−25 °C … +55 °C

DC COMBINER BOX/For Power Supply System

GDT-PV8/1 DC COMBINER BOX

- GDT-PV8/1 combiner box is suitable for inverter (MAX input voltageDC1000V/DC1200V/DC1500V, 8 PV input channel, 1 output channel, single MPPT inverter).Box body is made of PVC engineering aterials, with test for fire retardant. temperature rise,anti impact, anti ultraviolet and other testing.

Configuration diagram

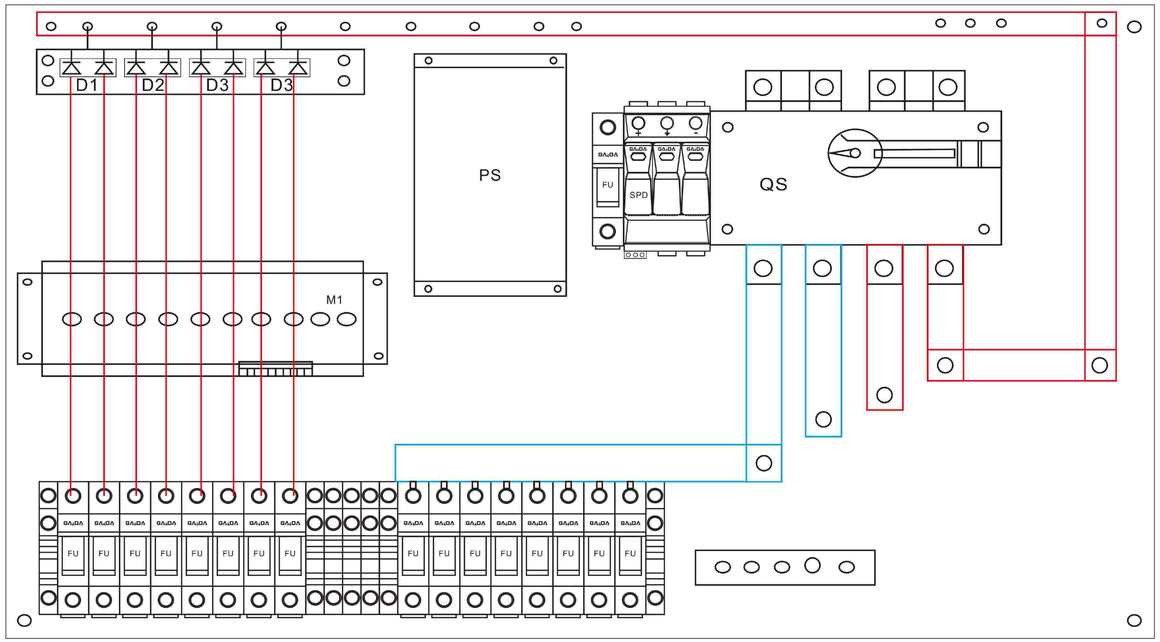

Schematic

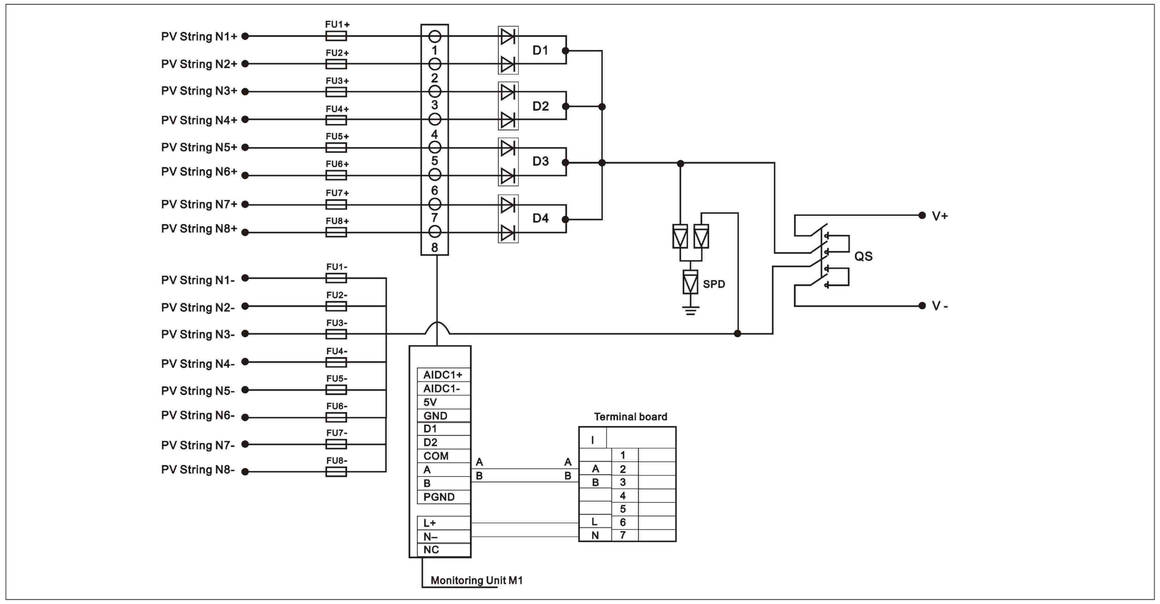

GDT-PV12/1 DC COMBINER BOX

- GDT-PV12/1 combiner box is suitable for inverter (MAX input voltageDC1000V/DC1200V/DC1500V, 12 PV input channel, 1output channel, single MPPT inverter).Box body is made of PVC engineering aterials, with test for fire retardant. temperature rise,anti impact, anti ultraviolet and other testing.

- High reliability
  With DC FUSE
  With DC Surge Protection Device
  With DC circuit breaker or DC load isolation switch.
- Strong adaptability
  IP65 design, waterproof, anti dust and anti ultraviolet. Strict test for high And low temperature, used widely.
  The simple installation, the simplified system wiring, the convenient wiring.
  The box body is made of cold rolled steel and other metal materials.
- Flexible configuration
  Used for single crystal silicon solar modules, polycrystalline silicon solar modules, thin film solar modules. Current rating of the photovoltaic fuse,circuit breaker, load isolation switch is modified.

Configuration diagram

Type	GDT-PV12/1-DC1000
Order Code	250019
Type(With communication function)	GDT-PV12/1-DC1000-FM
Order Code	250020
Electric paramenter	
System maximum dc voltage	1000V dc
Maximum input current for each string	15A
Maximum input strings	12
Maximum output switch current	200A
Number of inverter MPPT	N
Number of output strings	1
Lightning protection	
SPD according to EN 61643-11 / IEC 61643-11	Type 2/Class II /T2
Max. PV voltage (d.c.) (Ucpv)	1000V dc
Nominal discharge current (8/20 μs) (In)	20kA
Max. discharge current (8/20 μs) (Imax)	40kA
Voltage protection level (Up)	≤4.0kV
Poles	3P
System	
Protection garde	IP65
Output swich	DC MCB(optional)/DC isolation switch(standard)
Waterproof Connectors	PG/MC4
PV DC FUSE	Standard
PV SPD	Standard
Monitoring module	Optional
Preventing diode	Optional
Box material	iron
Installation method	Wall mounting type
Operating Temperature	−25 °C … +55 °C

DC COMBINER BOX/For Power Supply System

GDT-PV12/1 DC COMBINER BOX

- GDT-PV12/1 combiner box is suitable for inverter (MAX input voltageDC1000V/DC1200V/DC1500V, 12 PV input channel, 1 output channel, single MPPT inverter).Box body is made of PVC engineering aterials, with test for fire retardant. temperature rise,anti impact, anti ultraviolet and other testing.

Configuration diagram

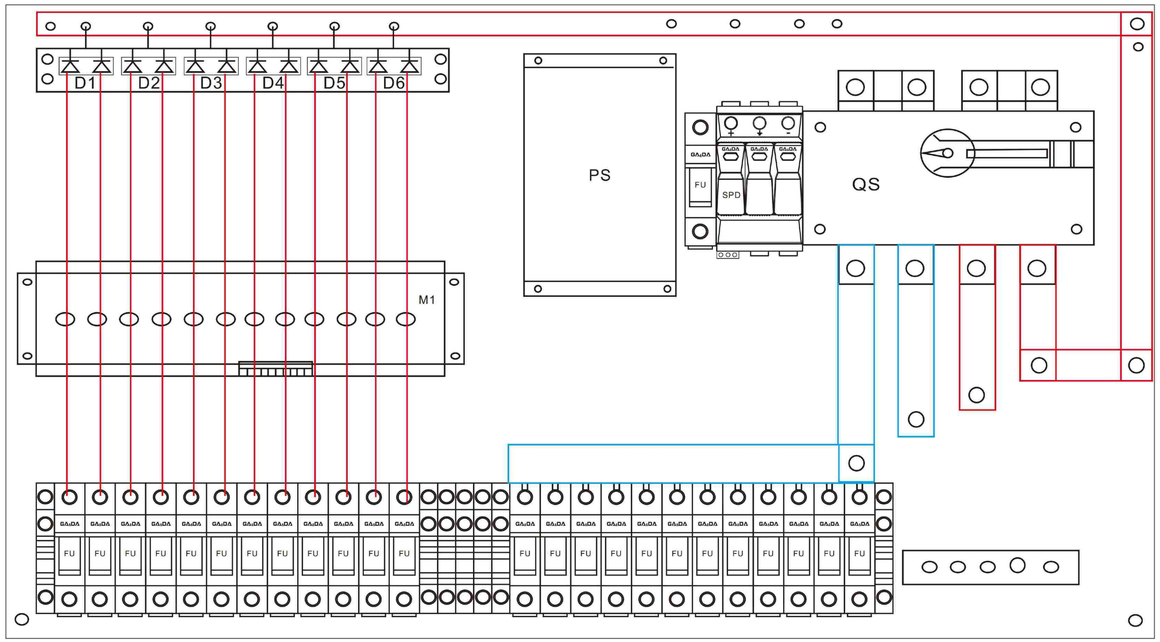

Schematic

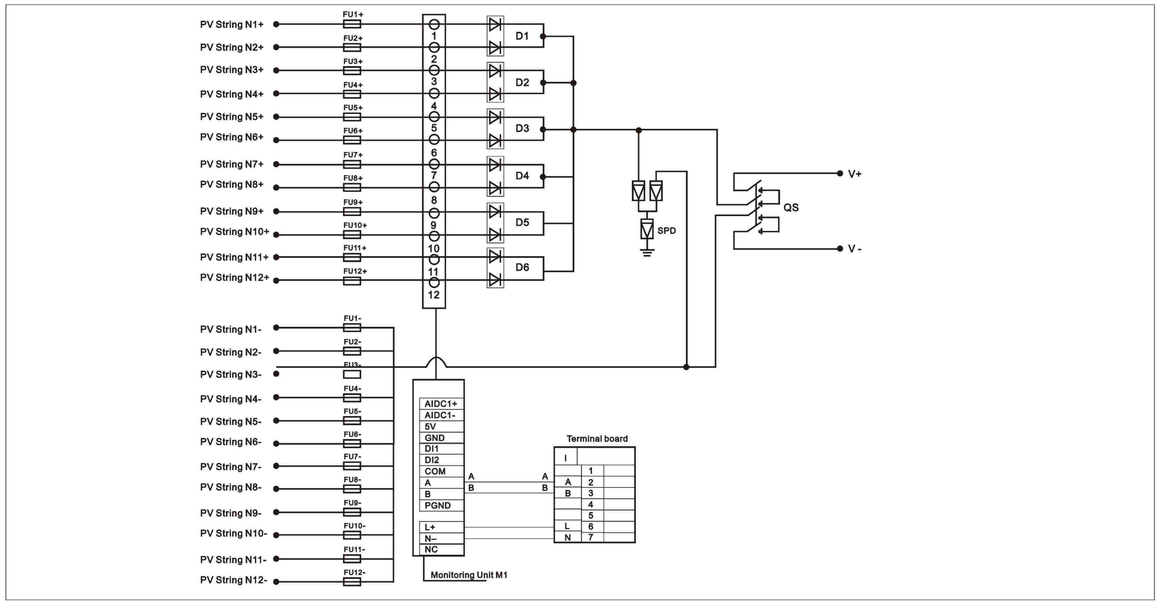

GDT-PV16/1 DC COMBINER BOX

- GDT-PV16/1 combiner box is suitable for inverter (MAX input voltageDC1000V/DC1200V/DC1500V, 16 PV input channel, 1output channel, single MPPT inverter).Box body is made of PVC engineering aterials, with test for fire retardant. temperature rise,anti impact, anti ultraviolet and other testing.

- High reliability
  With DC FUSE
  With DC Surge Protection Device
  With DC circuit breaker or DC load isolation switch.
- Strong adaptability
  IP65 design, waterproof, anti dust and anti ultraviolet. Strict test for high And low temperature, used widely.
  The simple installation, the simplified system wiring, the convenient wiring.
  The box body is made of cold rolled steel and other metal materials.
- Flexible configuration
  Used for single crystal silicon solar modules, polycrystalline silicon solar modules, thin film solar modules. Current rating of the photovoltaic fuse,circuit breaker, load isolation switch is modified.

Configuration diagram

Type	GDT-PV16/1-DC1000
Order Code	250021
Type(With communication function)	GDT-PV16/1-DC1000-FM
Order Code	250022
Electric paramenter	
System maximum dc voltage	1000V dc
Maximum input current for each string	15A
Maximum input strings	16
Maximum output switch current	250A
Number of inverter MPPT	N
Number of output strings	1
Lightning protection	
SPD according to EN 61643-11 / IEC 61643-11	Type 2/Class Ⅱ /T2
Max. PV voltage (d.c.) (Ucpv)	1000V dc
Nominal discharge current (8/20 μs) (In)	20kA
Max. discharge current (8/20 μs) (Imax)	40kA
Voltage protection level (Up)	≤4.0kV
Poles	3P
System	
Protection garde	IP65
Output swich	DC MCB(optional)/DC isolation switch(standard)
Waterproof Connectors	PG/MC4
PV DC FUSE	Standard
PV SPD	Standard
Monitoring module	Optional
Preventing diode	Optional
Box material	iron
Installation method	Wall mounting type
Operating Temperature	−25 °C … +55 °C

DC COMBINER BOX/For Power Supply System

GDT-PV16/1 DC COMBINER BOX

- GDT-PV16/1 combiner box is suitable for inverter (MAX input voltageDC1000V/DC1200V/DC1500V, 16 PV input channel, 1 output channel, single MPPT inverter).Box body is made of PVC engineering aterials, with test for fire retardant. temperature rise,anti impact, anti ultraviolet and other testing.

Configuration diagram

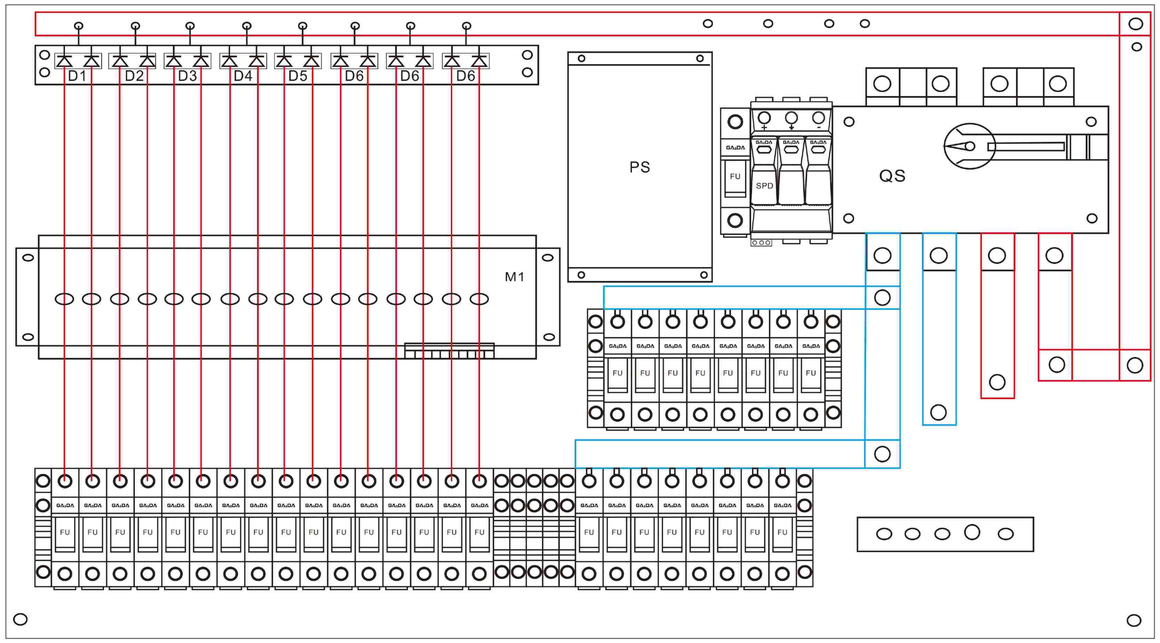
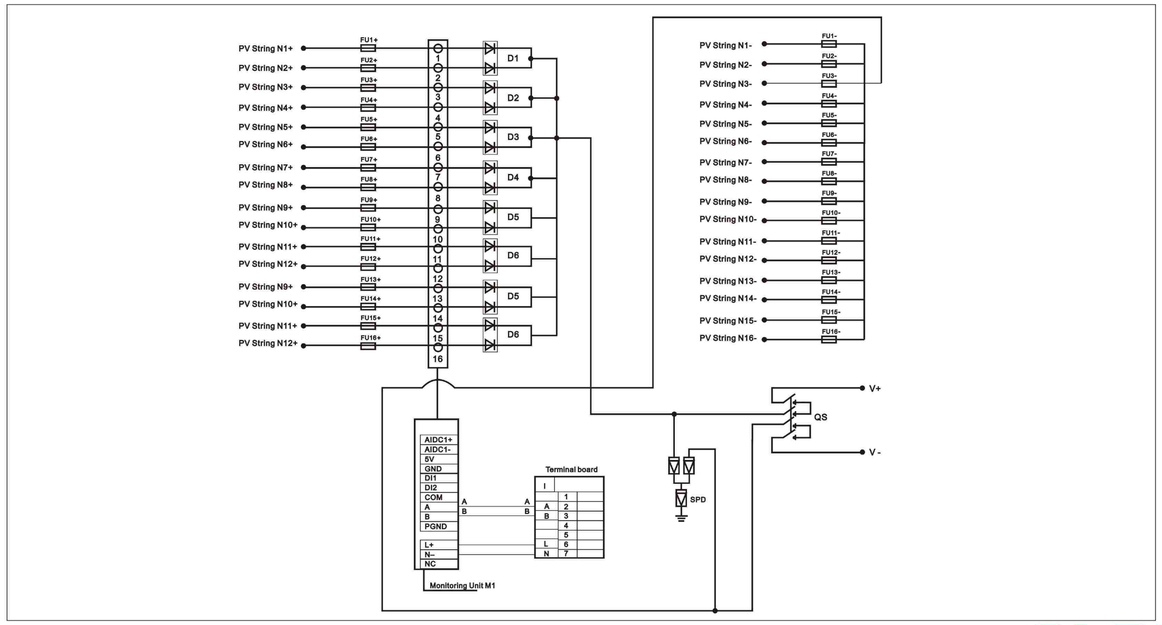
Schematic