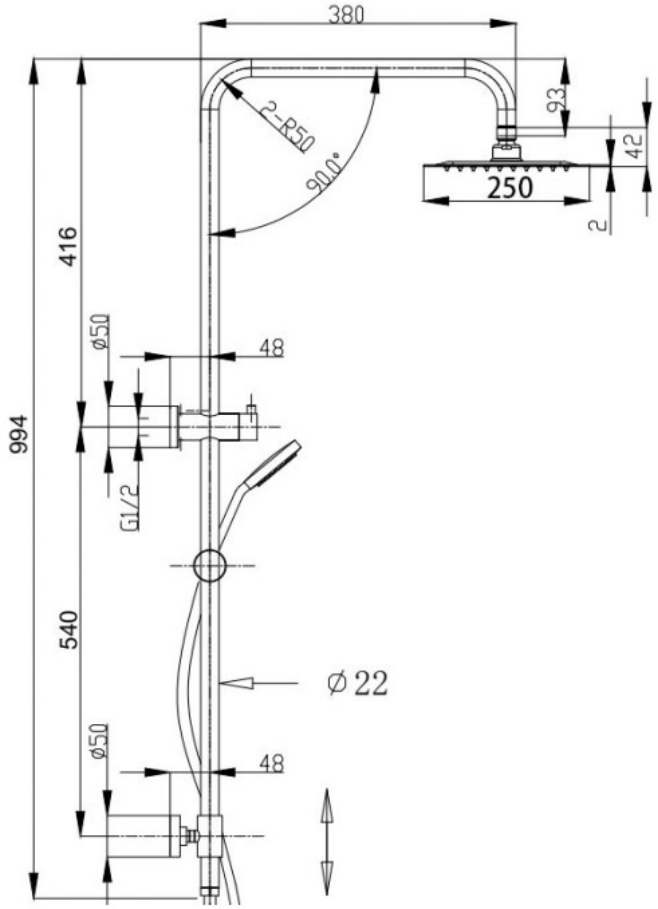


| | |
|---|---|
| **CODE** | LS-MP-TSR1H |
| **DESCRIPTION** | MAPLE TWIN SHOWER RAIL |
| **WATERMARK LIC.** | 1658 |
| **WELS** | 3 STAR, 9.0LPM \| REGO NO. S13274 |

**CHROME (CH)**

**BRUSHED GOLD (BG)**

**MATTE BLACK (MB)**

**GUN METAL (GM)**

**BRUSHED NICKEL (BN)**

**BRUSHED COPPER (BC)**

NB: Drawings are not to scale—they are to assist only. All measurements are nominal and are subject to change.