HYDRA KOOL

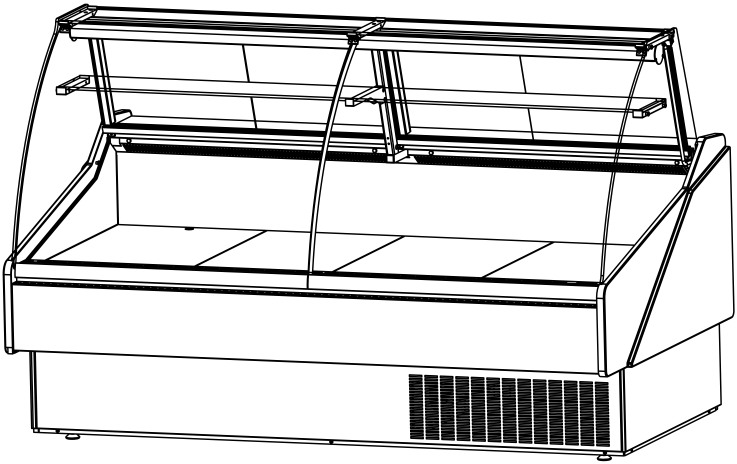

Intertek

Intertek

DOE Compliant

KPM SERIES - INSTALLATION AND OPERATION MANUAL - V0

MVP GROUP CORPORATION

5659 Royalmount Ave.
Montreal, QC, Canada
H4P 2P9
Telephone: (514) 737-9701
Toll Free Telephone: (888) 275-4538
Fax: (514) 342-3854
Toll Free Fax: (877) 453-8832
Email: sales@mvpgroupcorp.com
Website: www.mvpgroupcorp.com

INDEX

This page has been left blank intentionally.

1 General information

1.1 Case description

KPM series model (number) system.

KPM CG 40 S
AAA BB CC D

AAA	BB	CC	D
Basic model	Model variation	Length	Type of Unit.
	CG-Curved glass tilt forward	**60**"	**S**-Self Contained
	FG-Flat glass tilt forward	**80**"	**R**-Remote
	OF-Open front	**100**"	**D**-Dry

KPM SERIES

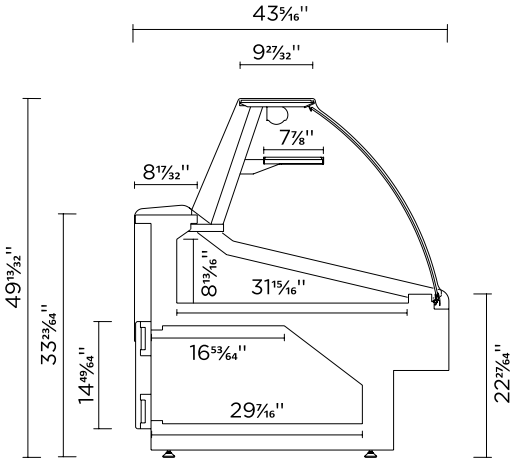

KPM-CG-S(R)(D)

KPM-CG-S(R)(D)

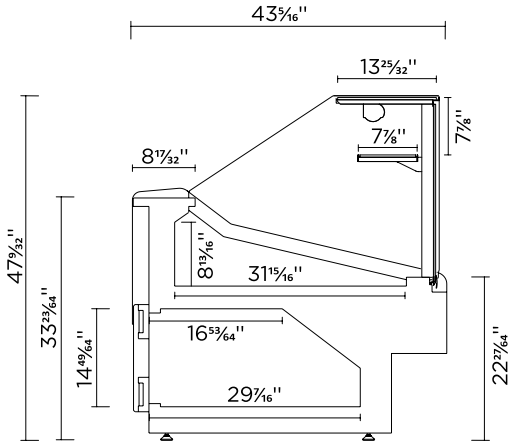

KPM-FG-S(R)(D)

KPM-FG-S(R)(D)

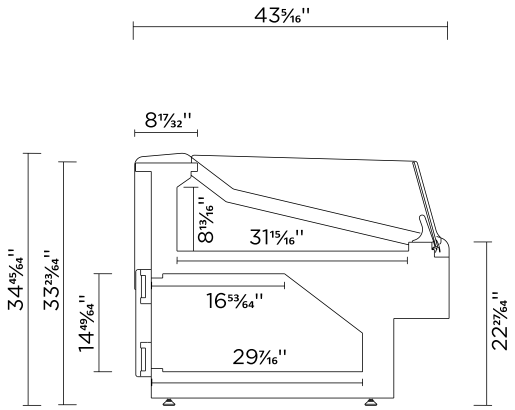

KPM-OF-S(R)(D)

KPM-OF-S(R)(D)

Implantation

Drain outlet

Electrical board

Refrigeration piping

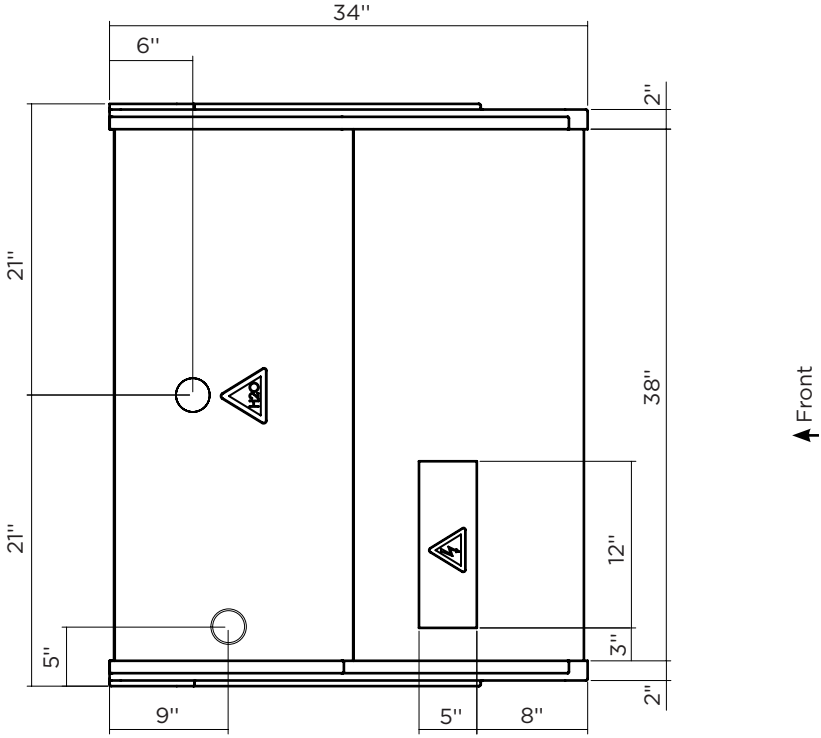

KGL-OF-40-S(R)

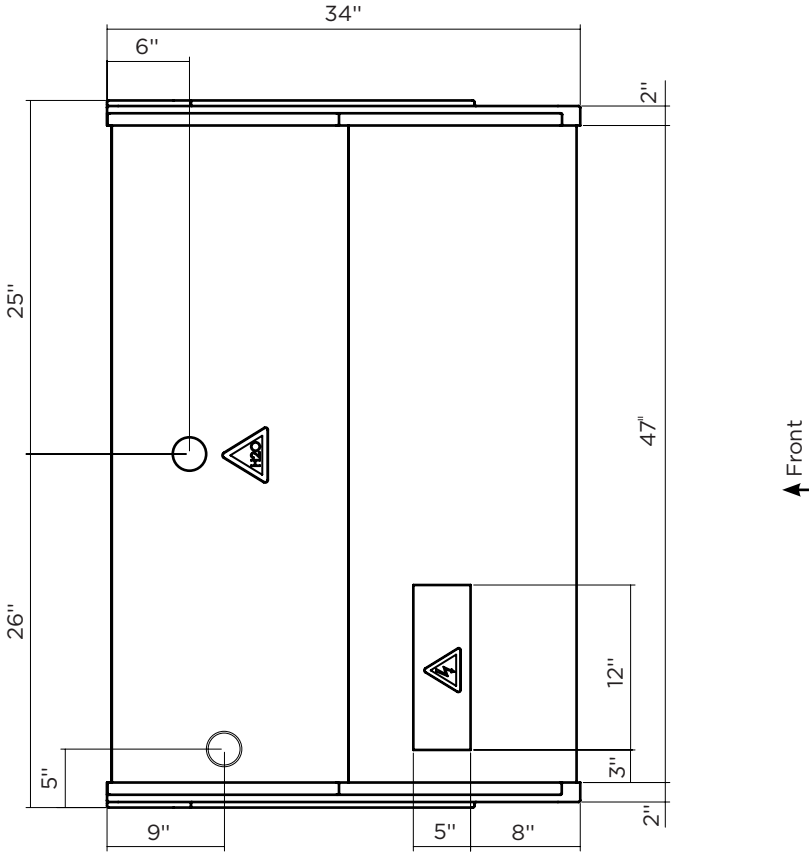

KGL-OF-50-S(R)

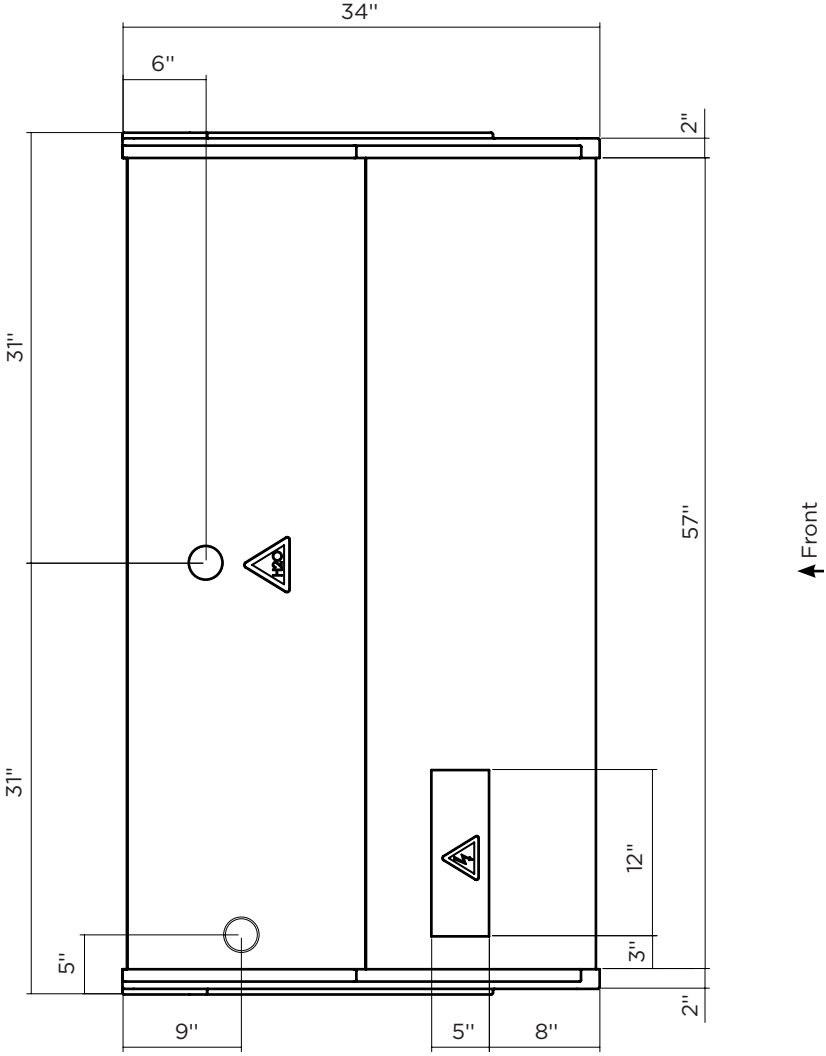

KGL-OF-60-S(R)

Drain outlet

Electrical board

Refrigeration piping

Electrical wiring

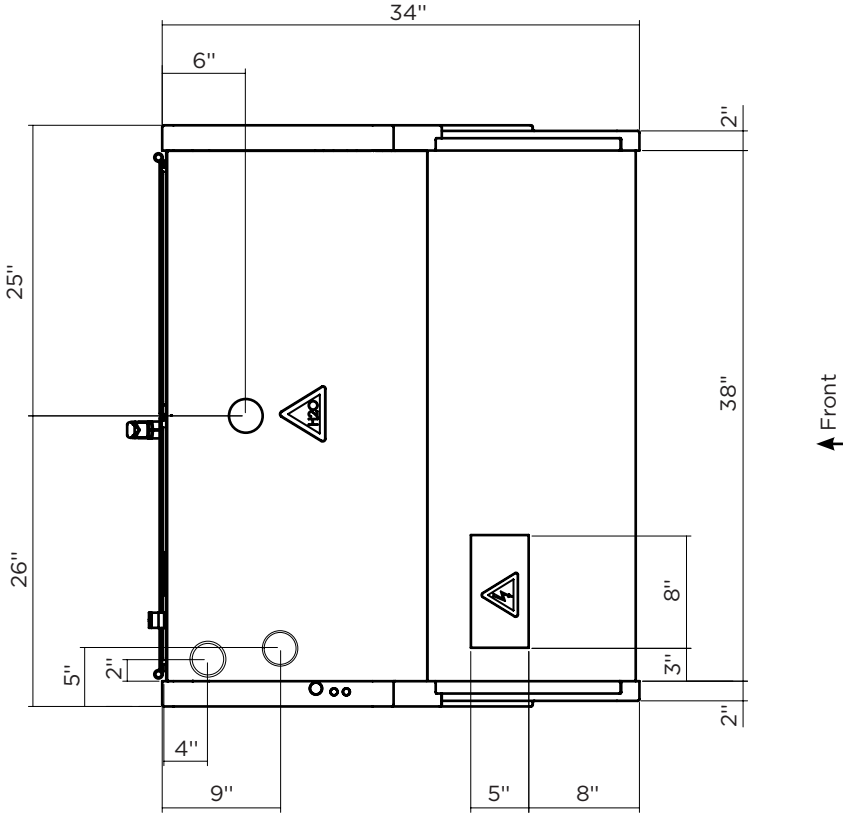

KGL-RS/RM-40-S(R)

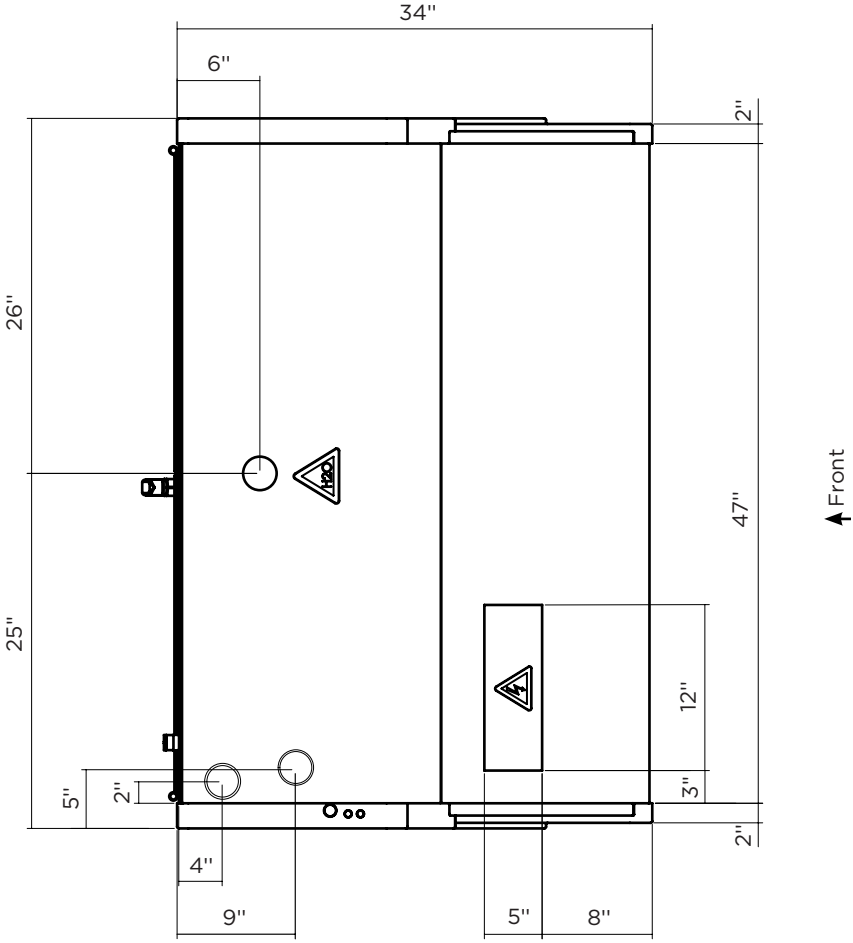

KGL-RS/RM-50-S(R)

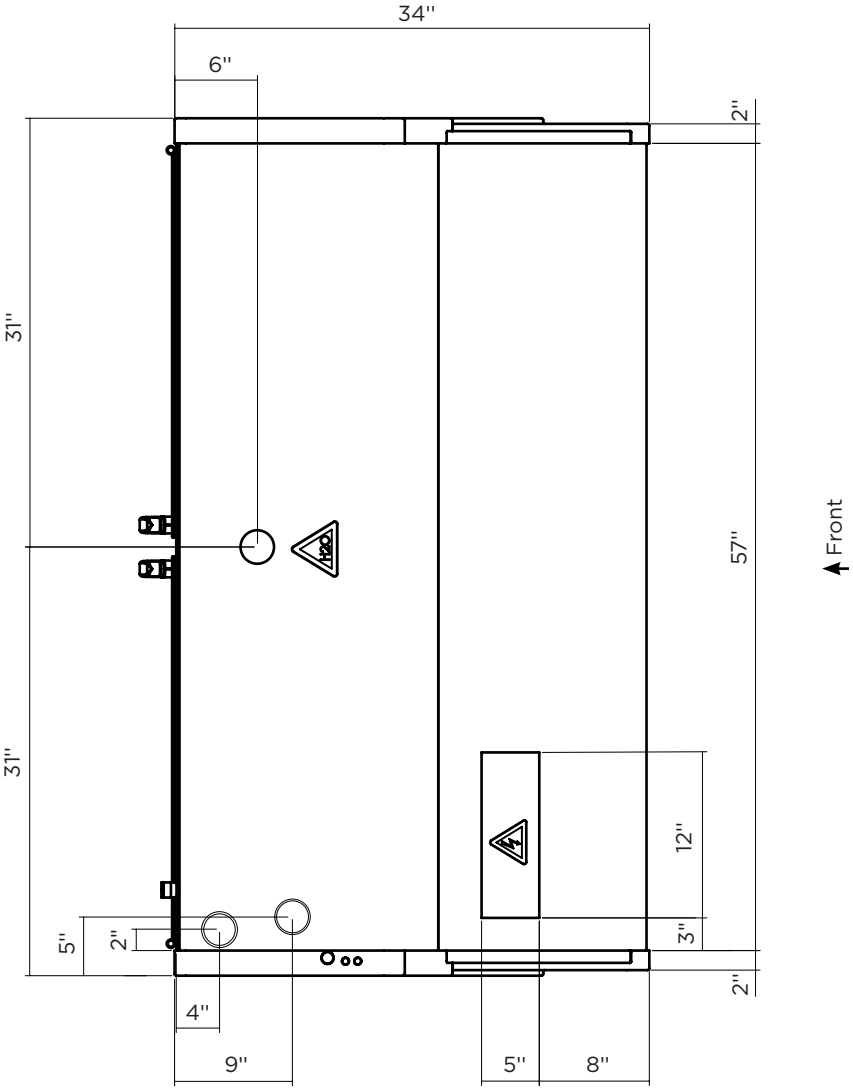

KGL-RS/RM-60-S(R)

Drain outlet

Electrical board

Refrigeration piping

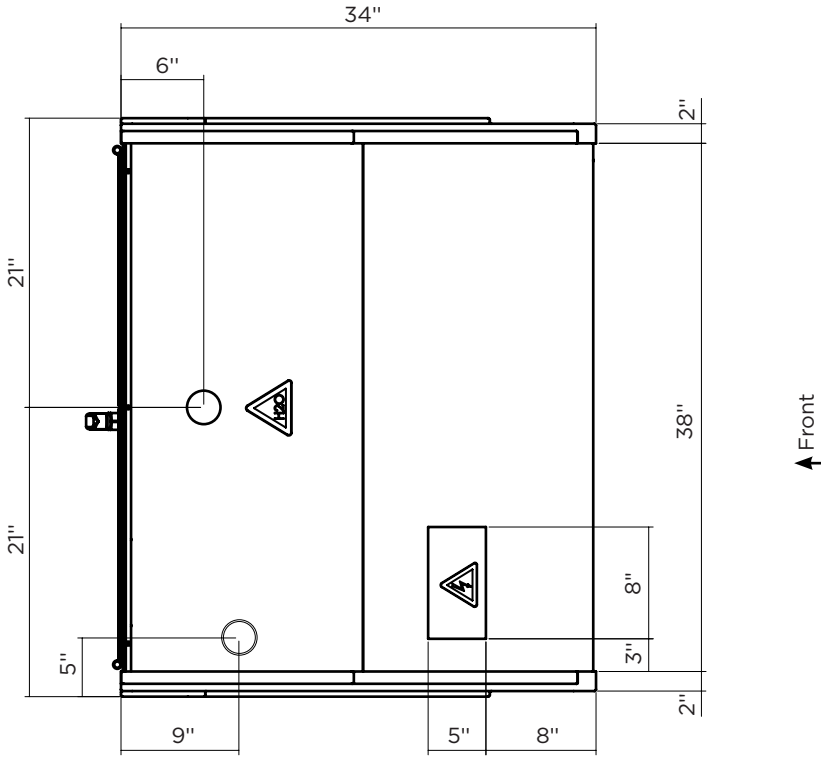

KGL-DL-40-S(R)

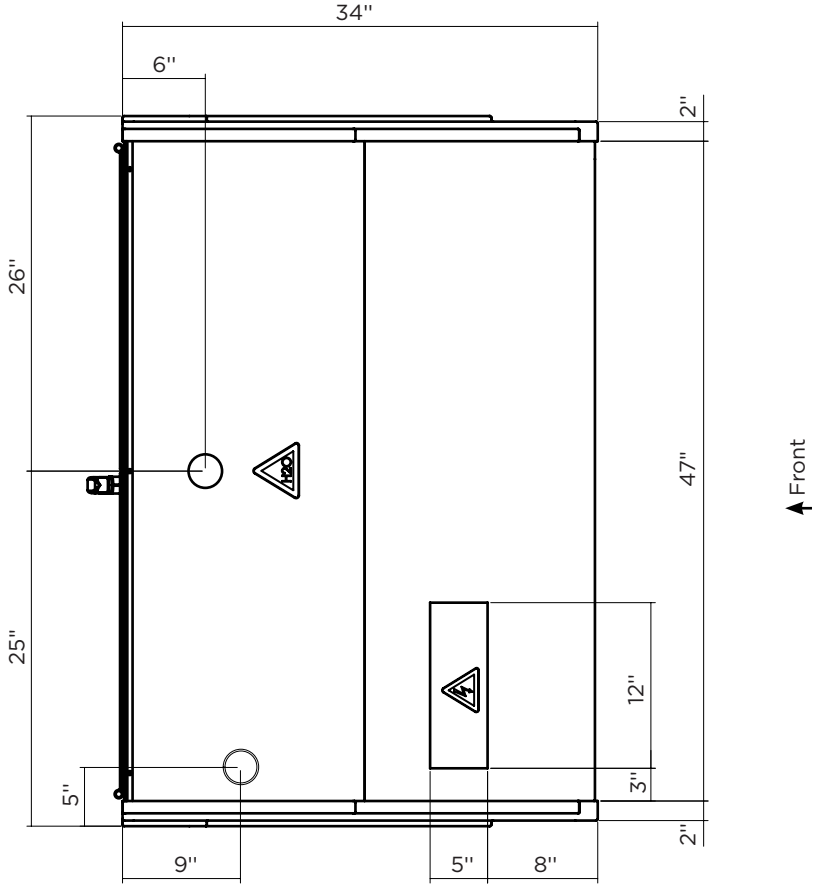

KGL-DL-50-S(R)

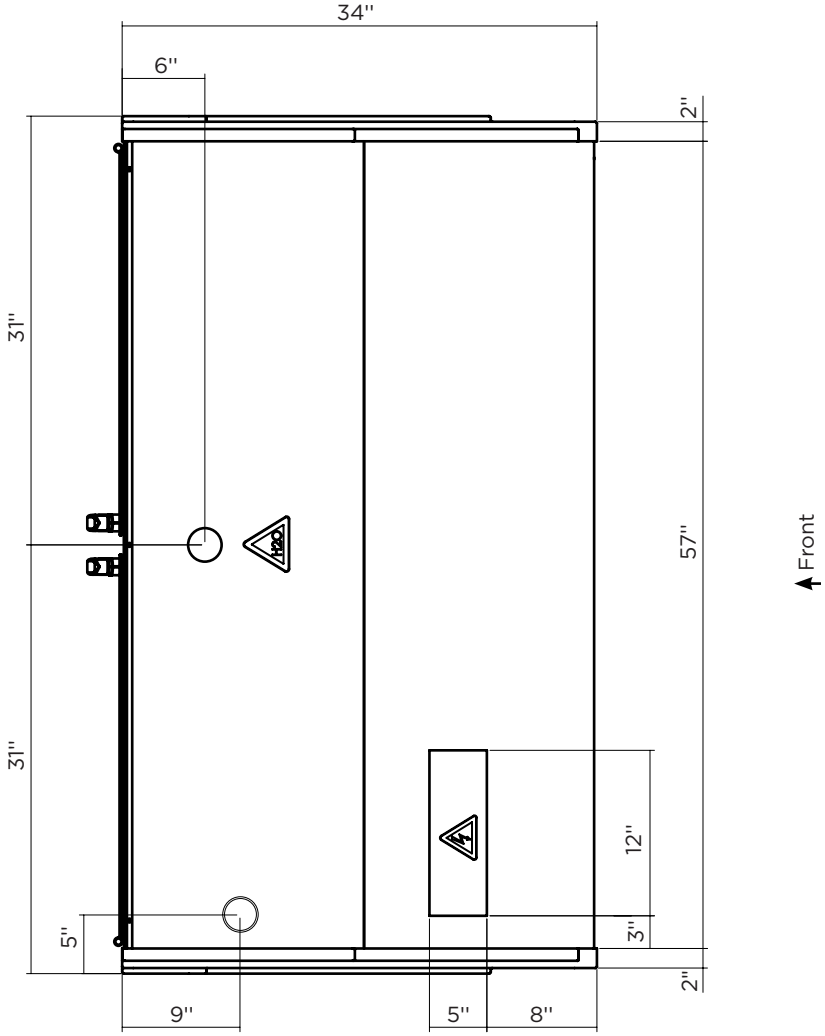

KGL-DL-60-S(R)

Drain outlet

Electrical board

Refrigeration piping

Electrical wiring

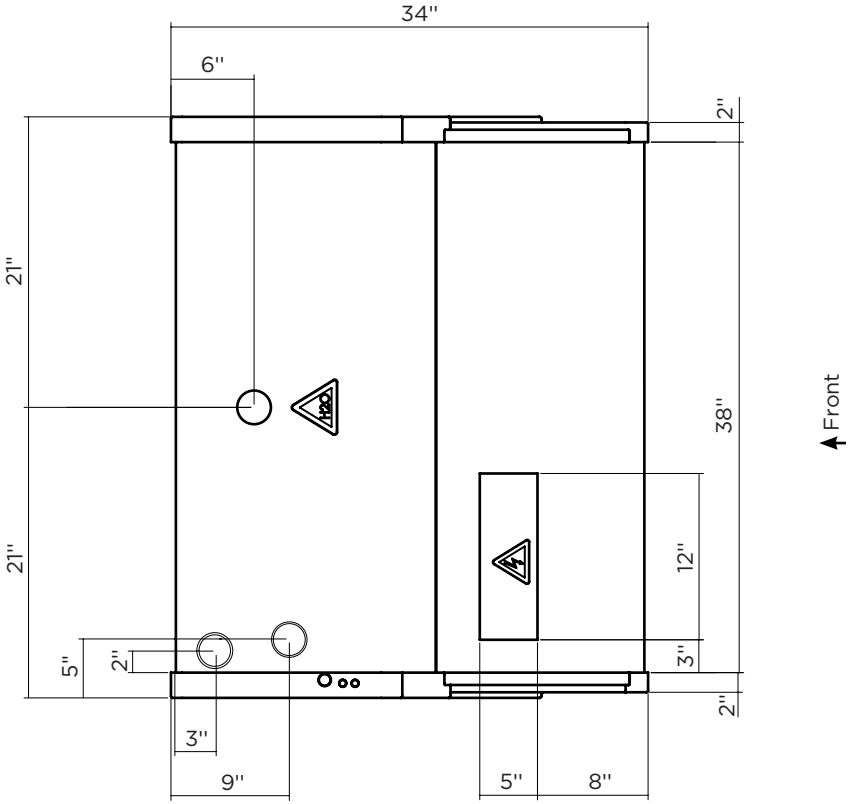

KGL-OS-40-S(R)

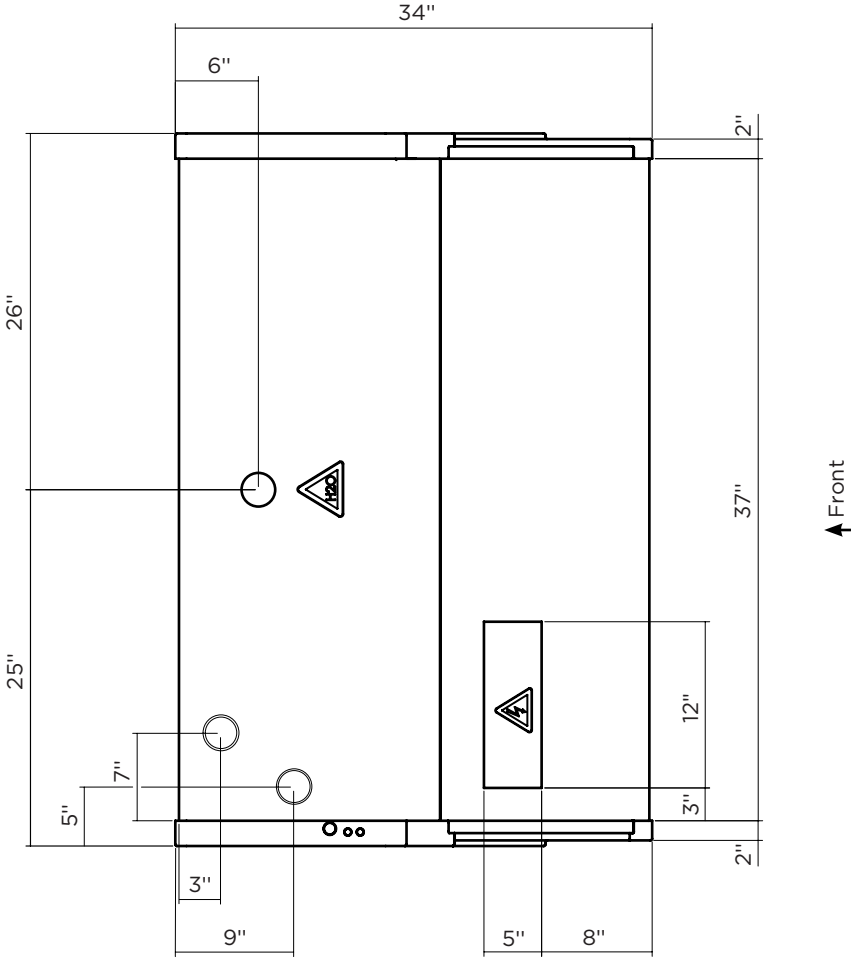

KGL-OS-50-S(R)

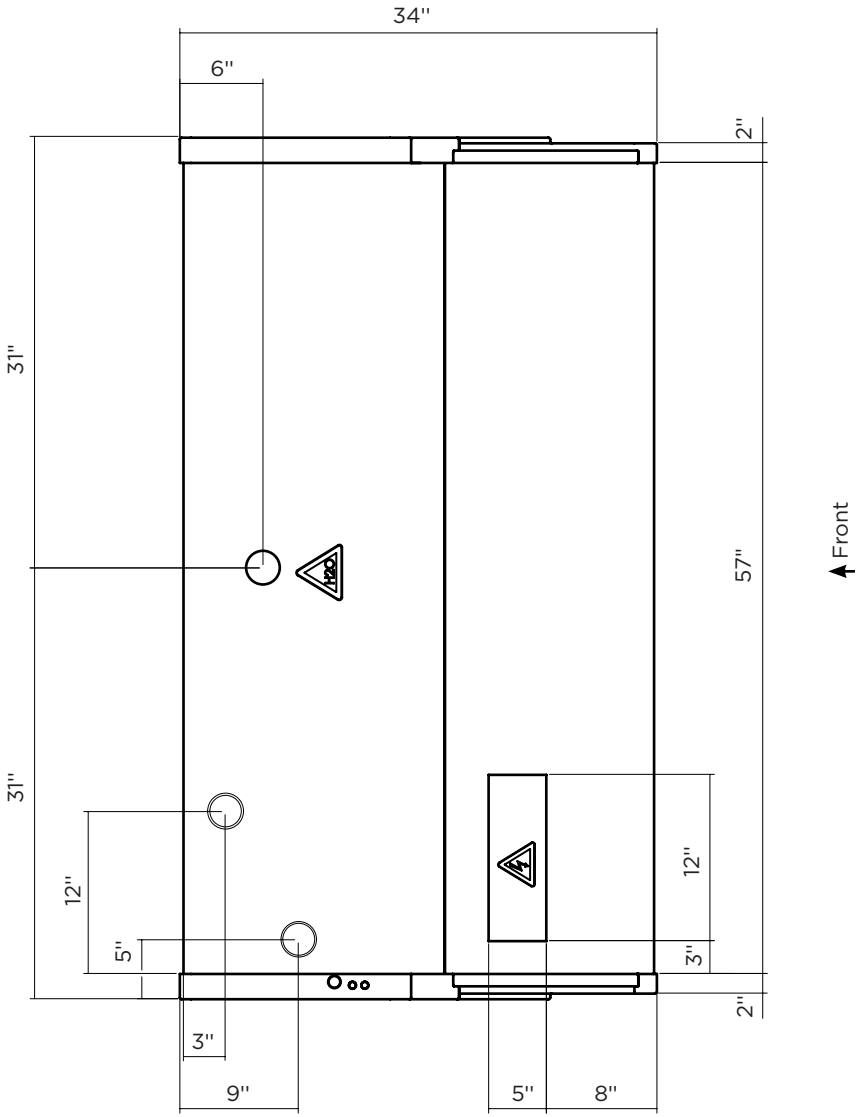

KGL-OS-60-S(R)

KPM series intended for deli, meat and fish are type 1 equipment - 75°F/55%RH. Temperature of the deli and meat cases is set for 32°F.

The decks have a 31 lb/ft² loading limit.

Glass shelves are for non refrigerated products only and have a 5,5 lb/ft² loading limit.

Model	Dimensions (LxDxH in inches)	Service dimensions (LxDxH in inches)	Volume (ft³)
KPM-CG-60-S(R)(D)	60 1/16" x 49 9/16" x 61 1/16"	60 1/16" x 49 9/16" x 75 7/8"	13,0
KPM-CG-80-S(R)(D)	77 9/16" x 49 9/16" x 61 1/16"	50" x 59 1/4" x 35 13/16"	19,9
KPM-CG-100-S(R)(D)	60 7/16" x 59 1/4" x 33 7/16"	60 7/16" x 59 1/4" x 35 13/16"	16,2
KPM-FG-60-S(R)(D)	40 3/4" x 59 1/4" x 35 15/16"	40 3/4" x 59 1/4" x 51 3/4"	13,0
KPM-FG-80-S(R)(D)	50" x 59 1/4" x 35 15/16"	50" x 59 1/4" x 56 5/16"	19,9
KPM-FG-100-S(R)(D)	60 7/16" x 64 15/16" x 35 15/16"	60 7/16" x 64 15/16" x 61"	16,2
KPM-OF-60-S(R)(D)	40 3/4" x 64 15/16" x 33 7/16"	40 3/4" x 59 1/4" x 35 13/16"	13,0
KPM-OF-80-S(R)(D)	50" x 64 15/16" x 33 7/16"	50" x 59 1/4" x 35 13/16"	19,9
KPM-OF-100-S(R)(D)	60 7/16" x 64 15/16" x 33 7/16"	60 7/16" x 59 1/4" x 35 13/16"	16,2

2 Getting started with your KPM series

2.1 Location

To your new equipment perform well please respect the following warnings:

- ⚠ This is type 1 equipment, intended to work with 75°F / 55%RH.
- ⚠ This equipment is intended for maintaining temperature only.
- ⚠ Be sure products are not ambient temperature (must be cold)
- ⚠ This equipment must be located in an indoor environment.
- ⚠ Check for airdrafts and avoid them.
- ⚠ Air movement from ac units shouldn't be directed to the equipment.
- ⚠ The equipment must not be directly or indirectly exposed to the sun.
- ⚠ Check for rejected heat from another refrigeration units and avoid that.
- ⚠ Place the equipment in a levelled floor.
- ⚠ Do not obstruct the air way in front of the condenser.
- ⚠ Make sure there is a drain preparation (remotes and fish display cases only).

- Models to be positioned against a wall keep a safe distance of 2³/₈''.
- After servicing always close the doors.
- Make sure you have a suitable electrical installation.
- This equipment should be handled by a qualified technician.

2.2 Uncrating

- All operations must be done carefully.
- All plastic protective films must be removed before using the equipment for the first time.

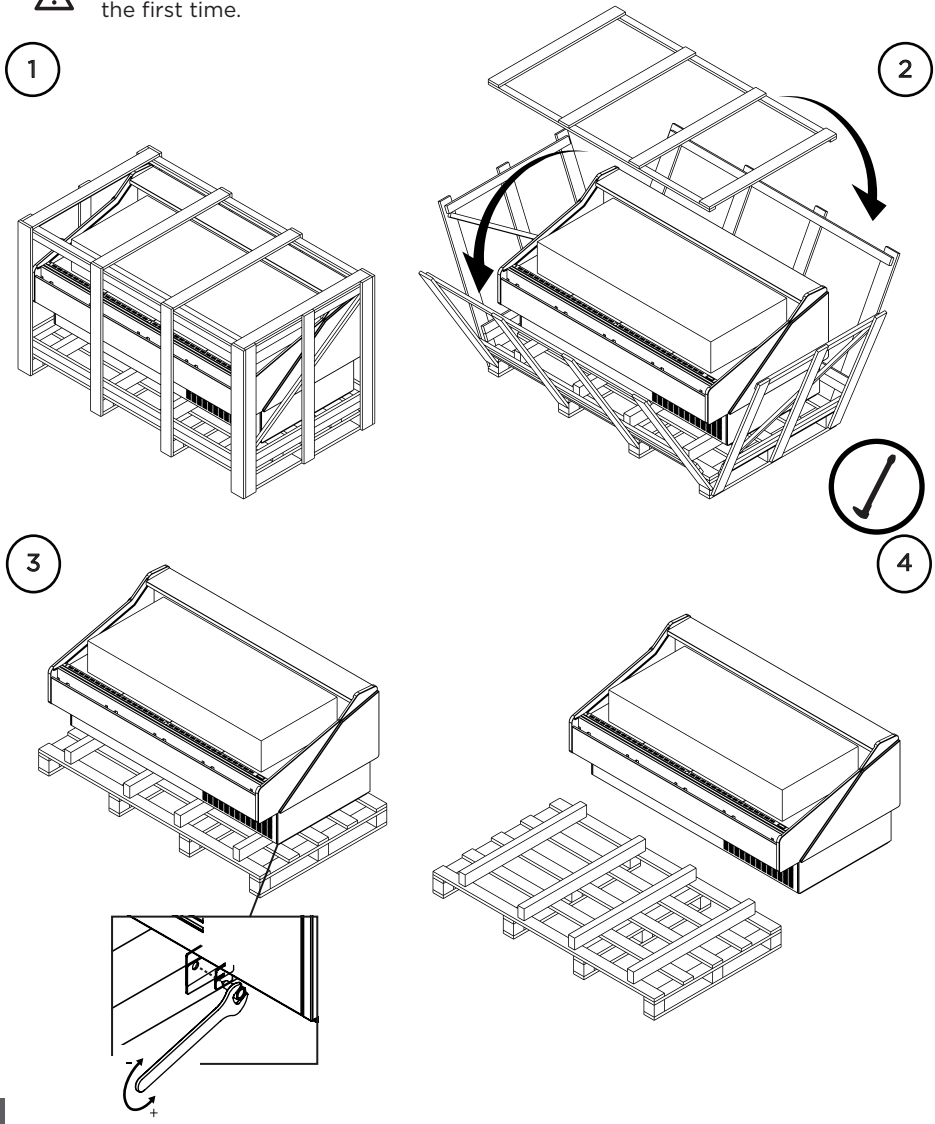

2.2.1 Front and sides assemblies

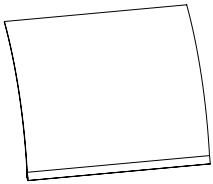

2x - VID24M01095

2x - VID07003000

1x - PRT01201190

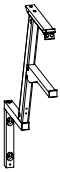

1x - BRA09M02000

2x - PAR00802002
DIN912 M5x12

2x - ANL00101006
DIN 127

2x- ANL00501006
DIN 9021

1x - PRN00101002
DIN 916

1x - APO01101000

1x - PAR00902001
DIN7380 M5x12

1x - PAR00902004
DIN7380 M4x10

6 x - CMS00101000

10 x - PAR11101001

1x - GAM13M01200

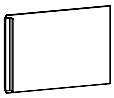

4x - POR19M01100

1x - PAR01002013

1x - PRT01301190

2x - SUP17M01020

1

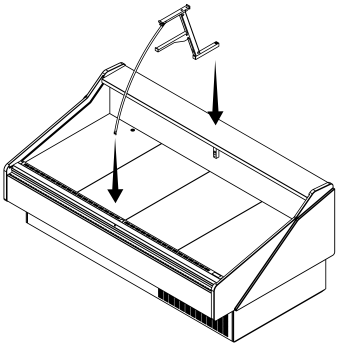

2

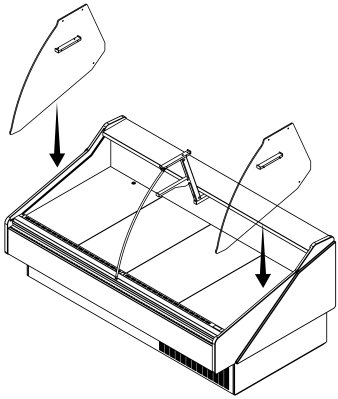

3

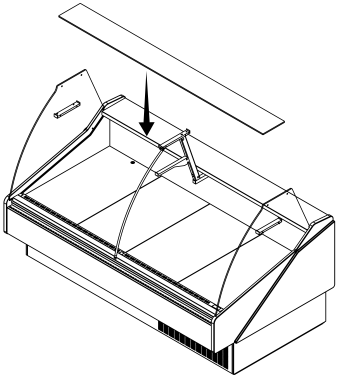

4

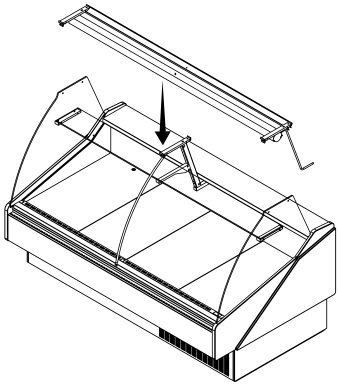

5

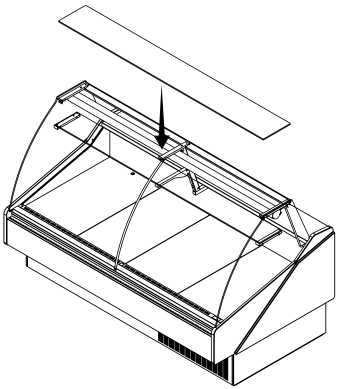

6

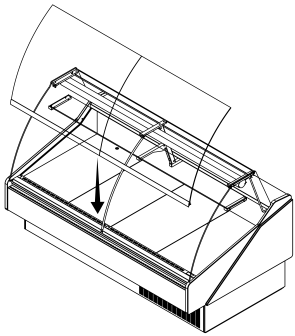

7

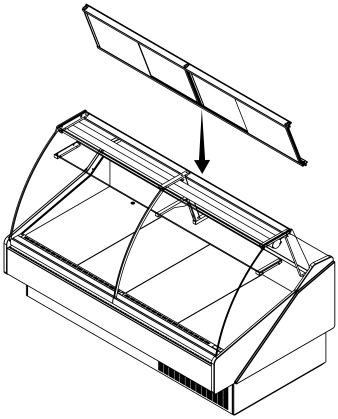

8

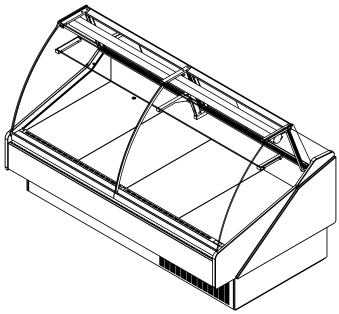

2.3 Check for damage

At the end of production HYDRA KOOL products are carefully inspected. No damaged units are sent out.
HYDRA KOOL doesn't take responsibility for damage between factory and client.

Possible damage on the unit must be checked to file a claim near the transportation company.

The unit must be checked in the following points:

Exterior panels

Doors

Shelves

Glasses

Paint job

Door handles

Base structure

2.4 Control panel and main features

The pictures below, shows the main features and all necessary controls.

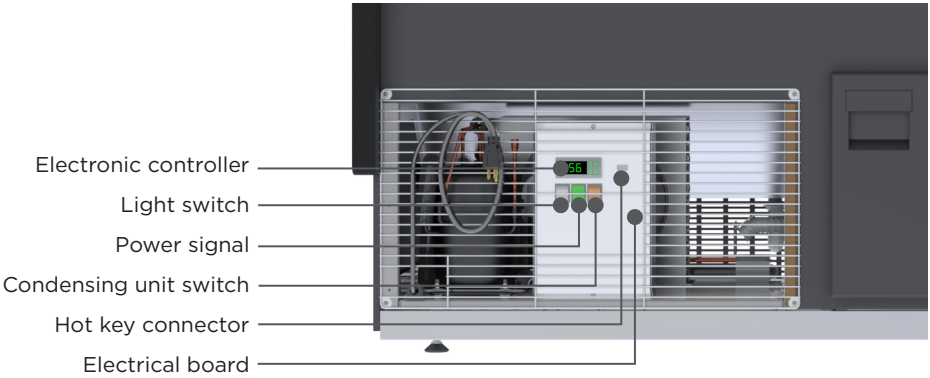

Self contained control panel (KPM-CG/FG/OF)

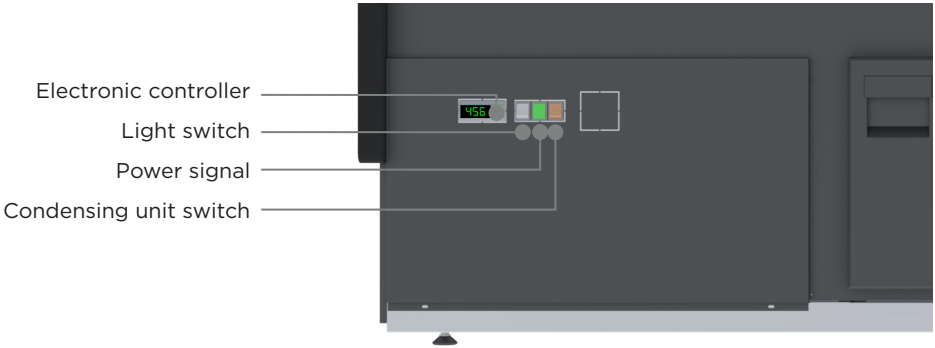

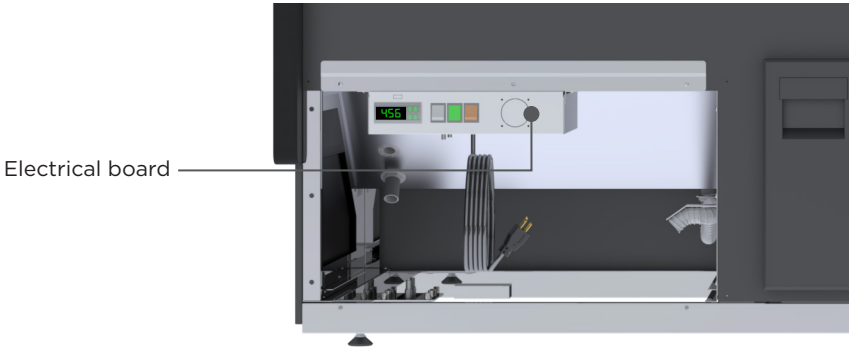

Remote control panel (KPM-CG/FG/OF)

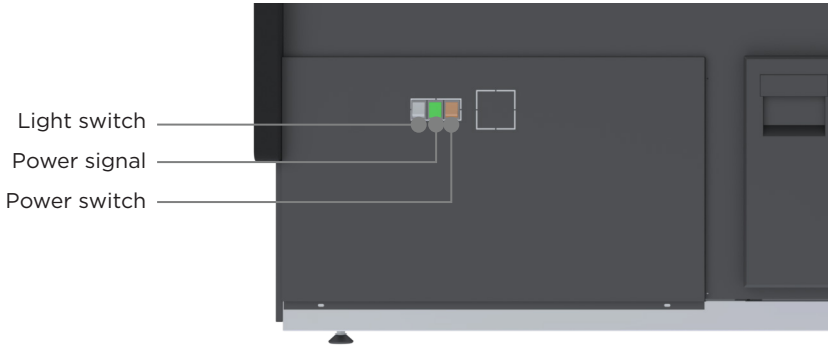

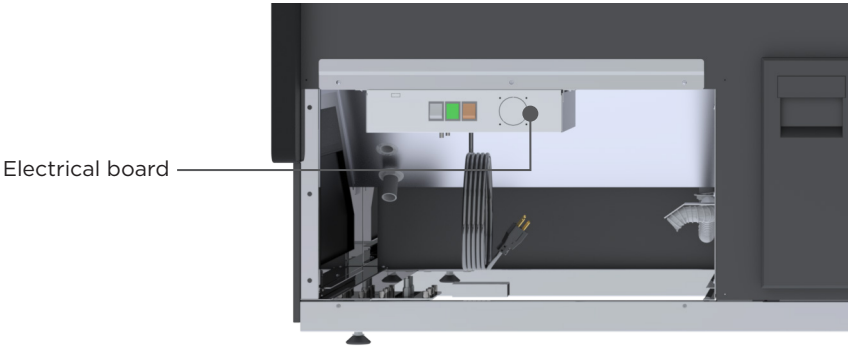

Dry control panel (KPM-CG/FG/OF)

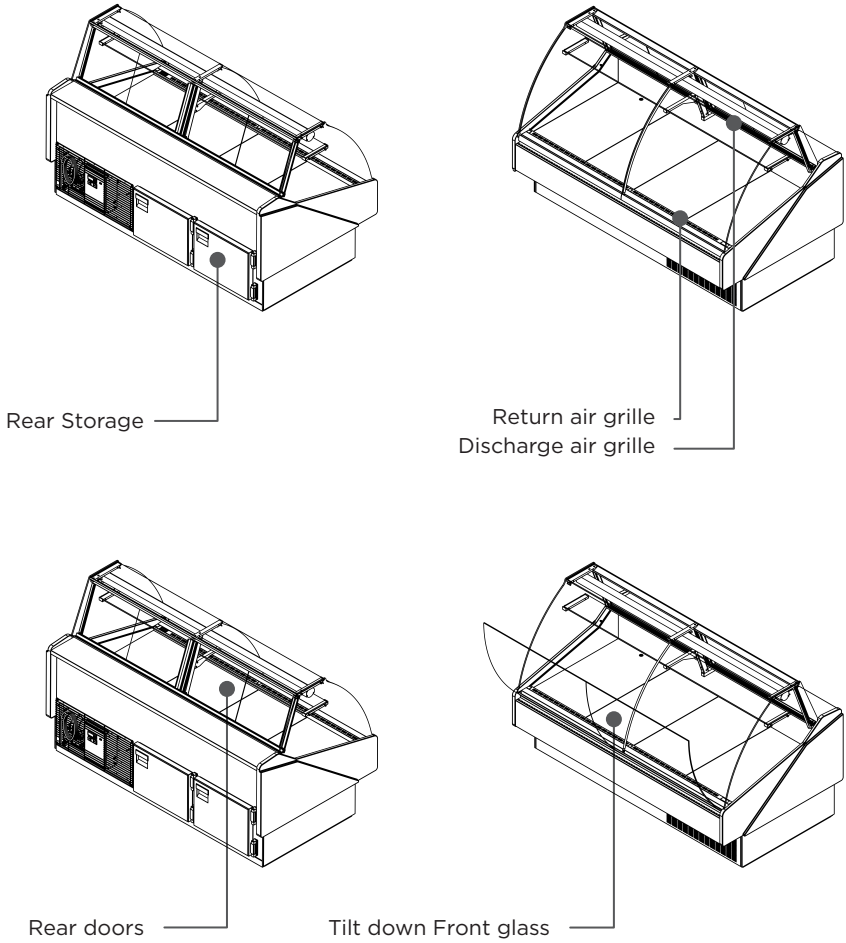

2.5 Check serial, model numbers and requested options

Before starting your equipment, check the serial number, model numbers and requested options. This inspection should be made visually in the following items:

Self contained numbers

MVP GROUP CORP.

For service, please call:
(514) 737-9701

www.mvpgroupcorp.com

MADE IN PORTUGAL

ETL MODEL

CASE FAMILY

SERIAL NO.

DATE MFG

COMMERCIAL REFRIGERATOR CONFORMS TO UL STANDARD 471 AND NSF STD 7 CERTIFIED TO CAN/CSA STD C22.2 NO. 120

C ETL US LISTED
Intertek
4004083

HYDRA KOOL

ETL SANITATION LISTED
Intertek

120V CIRCUIT

EVAP PAN	DOOR HEATER	LIGTHS	ANTI-S FANS	EVAP FANS	COND FANS		COMP
						--AMPS--	
						---QTY---	
						-PHASE-	
						---HRTZ--	
						LRA---	

REF AMOUNT LEFT: OZ
REF AMOUNT RIGHT: OZ
REF TYPE

PSI HIGH SIDE: psig
PSI LOW SIDE: psig

TOTAL CASE AMPS

MINI BRANCH CIRCUIT AMPACITY
MAX OVERCURRENT PROTECTION AMPS

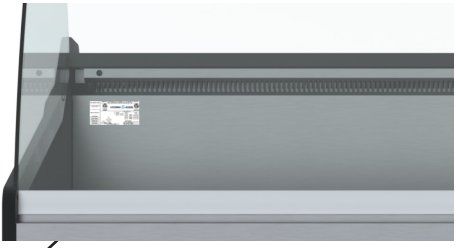

Remote numbers

MVP GROUP CORP.

For service, please call:
(514) 737-9701

www.mvpgroupcorp.com

MADE IN PORTUGAL

ETL MODEL

CASE FAMILY

SERIAL NO.

DATE MFG

COMMERCIAL REFRIGERATOR CONFORMS TO UL STANDARD 471 AND NSF STD 7 CERTIFIED TO CAN/CSA STD C22.2 NO. 120

C ETL US LISTED
Intertek
4004083

HYDRA KOOL

ETL SANITATION LISTED
Intertek

120V CIRCUIT

DOOR HEATER	LIGTHS	ANTI-S FANS		EVAP FANS
			--AMPS--	
			---QTY---	
			-PHASE-	
			--HRTZ--	

REF TYPE

PSI HIGH SIDE: psig
PSI LOW SIDE: psig

TOTAL CASE AMPS

MINI BRANCH CIRCUIT AMPACITY
MAX OVERCURRENT PROTECTION AMPS

2.6 Warning/Caution labels

⚠ Before starting, HYDRA KOOL products have caution and warning labels to be respected.

Self contained labels

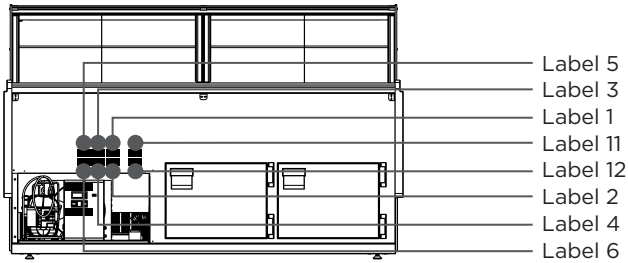

Remote labels

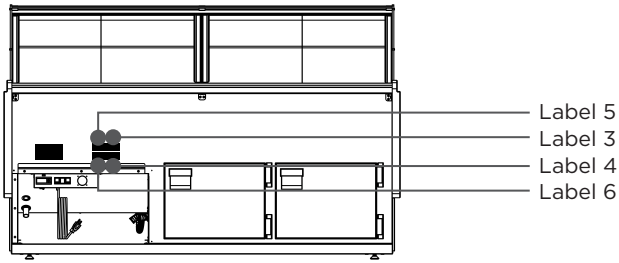

Dry labels

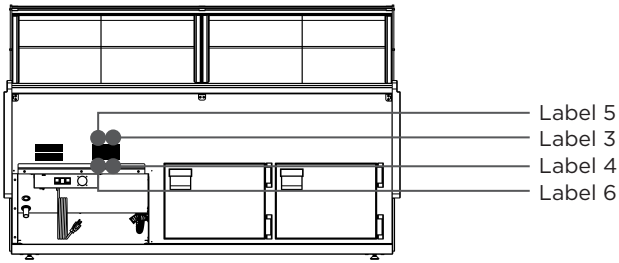

Self contained labels

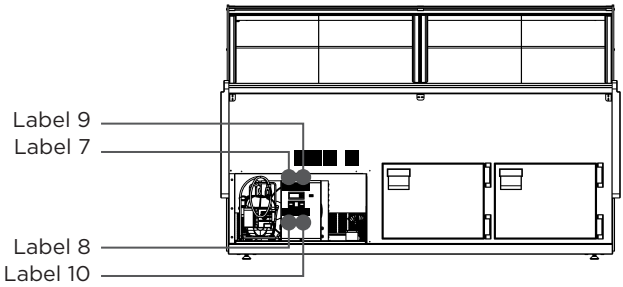

Remote labels

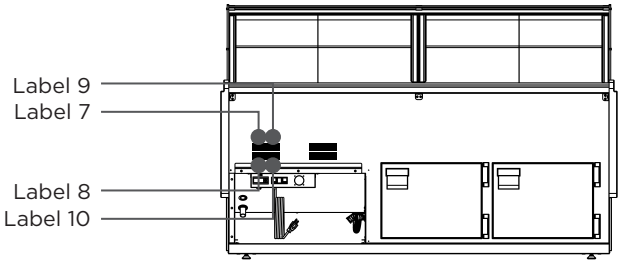

Dry labels

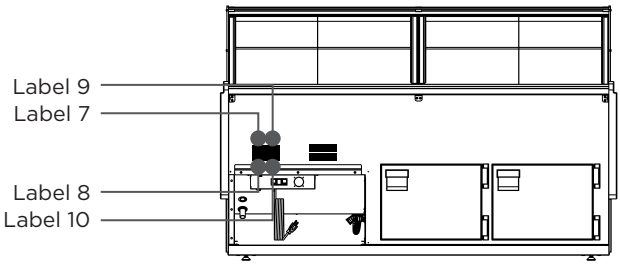

Self contained, Remote and Dry labels (evaporator)

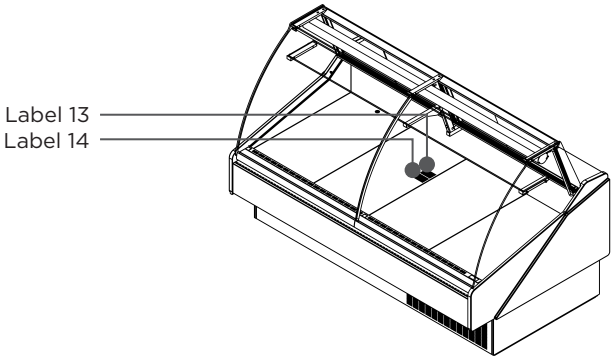

Label 1

CAUTION

MOVING PARTS.
DO NOT OPERATE UNIT
WITH (PART) REMOVED

Label 2

ATTENTION

PIÈCES MOBILES.
NE FAIRE PAS
FONCTIONNER AVEC
DES PIÈCES ENLEVER

Label 3

-NOTE-

THIS A TYPE 1 CASE AND IS DESIGNED TO OPERATE AT THE FOLLOWING STORE CONDITIONS THAT DOES NOT EXCEED
75 F AND 55% R.H.

Label 4

-NOTE-

CETTE VITRINE TYPE 1 EST CONÇUE POUR FONCTIONNER SELON LES CONDITIONS DU MAGASIN ET NE DOIT DÉPASSER
75 F AND 55% R.H.

Label 5

-NOTE-

THIS EQUIPMENT IS INTENDED FOR THE STORAGE AND DISPLAY OF PACKAGED FOOD PRODUCTS ONLY

Label 6

-NOTE-

CET EQUIPEMENT EST PREVU UNIQUEMENT POUR LE STOCKAGE ET EXPOSITION DE PRODUITS ALIMENTAIRES EMBALLER

Label 7

CAUTION

DISCONNET ALL POWER. MAY HAVE MORE THEN ONE DISCONNET SWITCH

Label 8

ATTENTION

DEBRANCHER TOUTE COURANT. IL PEUT AVOIR PLUS D'UN INTERRUPTEUR

Label 9

CAUTION

RISK OF ELECTRIC SHOK. DISCONNECT ALL POWER BEFORE SERVICING UNIT

Label 10

ATTENTION

RISQUE DE CHOC ELECTRIQUE. AVANT TOUT TRAVAIL COUPER LE COURANT

Label 11

CAUTION

HOT PARTS. DO NOT OPERATE UNIT WITH (PART) REMOVED

Label 12

ATTENTION

PIÈCES BRULANTES. NE FAIRE PAS FONCTIONNER AVEC LES PIÈCES ENLEVER

Label 13

CAUTION

HAZARDOUS MOVING PARTS. DO NOT OPERATE UNIT WITH DECK PANS

Label 14

ATTENTION

PIÈCES MOBILES DANGEREUSES. NE FAIRE PAS FONCTIONNER AVEC DES PIÈCES ENLEVER

2.7 Check your electrical installation

⚠ This equipment is intended to be connected to an outlet with 115V/ 60Hz/ 1 phase.

Nema-5-15P

2.8 Electrical, drain and refrigeration connections (remotes only)

⚠ Installation and service must be performed by a qualified technician.

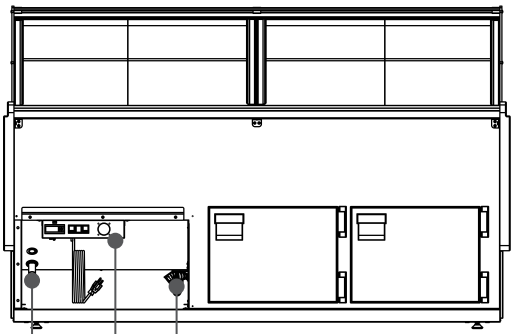

Prepare a drain installation

All electrical connections must be done from the electrical board

Equipments for remote installation come with nitrogen under pressure and an easy prep kit (tubing connections needed only) for installation.

2.9 Joining

For joining follow the steps described.

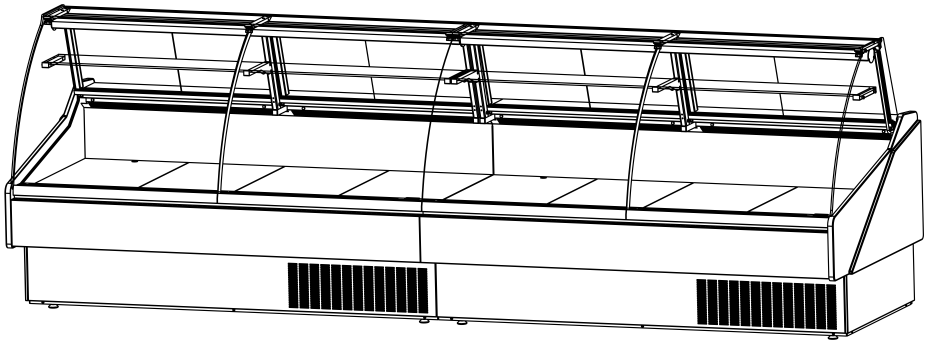

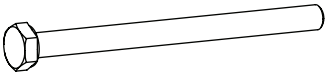

3x - PAR00601013 DIN933 M6x80

2x - PAR00902003 DIN 7380 M5x10

2x - PAR00601007 DIN933 M6x20

2x - PAR00902007 DIN 7380 M5x50

14x- ANL00501006 DIN9021 M6

4x - PAR00801102 DIN912 8.8

5x - PRC00101006 DIN934 M6

4x - ANL00101006 DIN 127-B

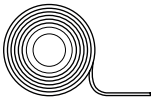

2X FIT00000427 A100 04 (91 59/64")

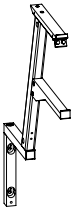

2x - BRA09M02000 VA 71

2X PRN00101002 DIN916 M6x16

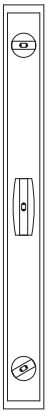

1x

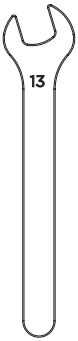

1x

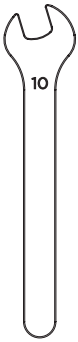

1x

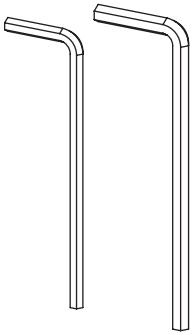

DIN911 - 3/4

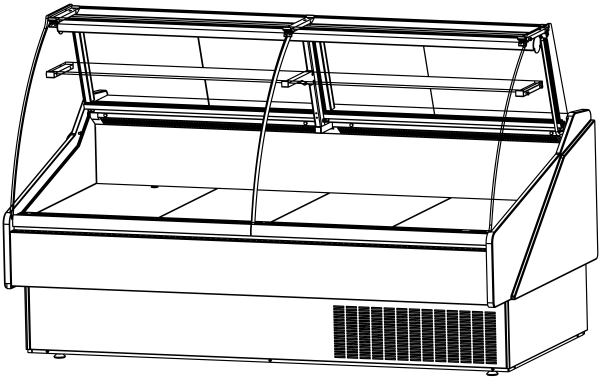

2x KPM-CG

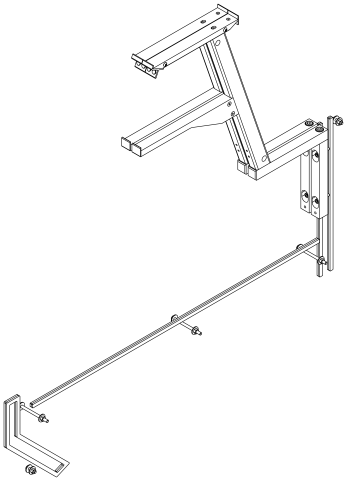

KIT0012U02000

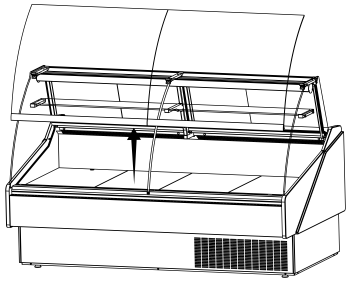

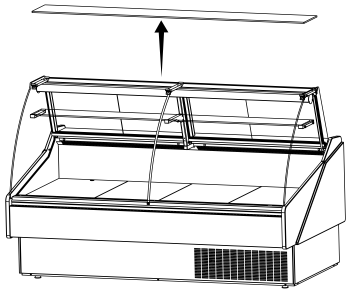

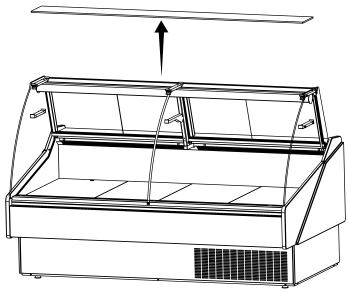

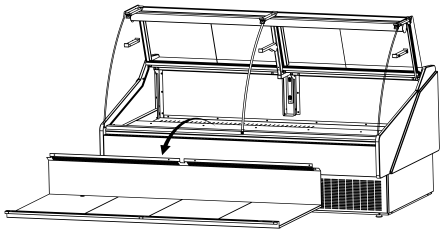

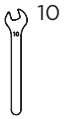

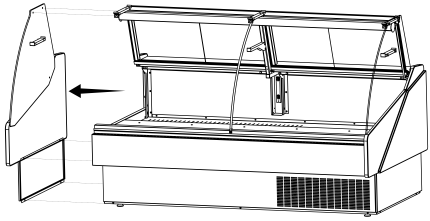

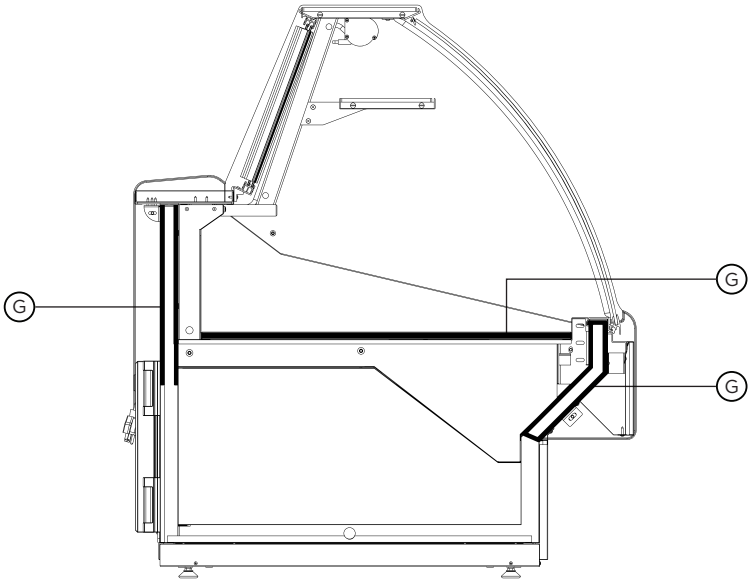

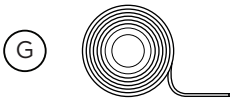

2X - FIT00000427 (91 49/64")

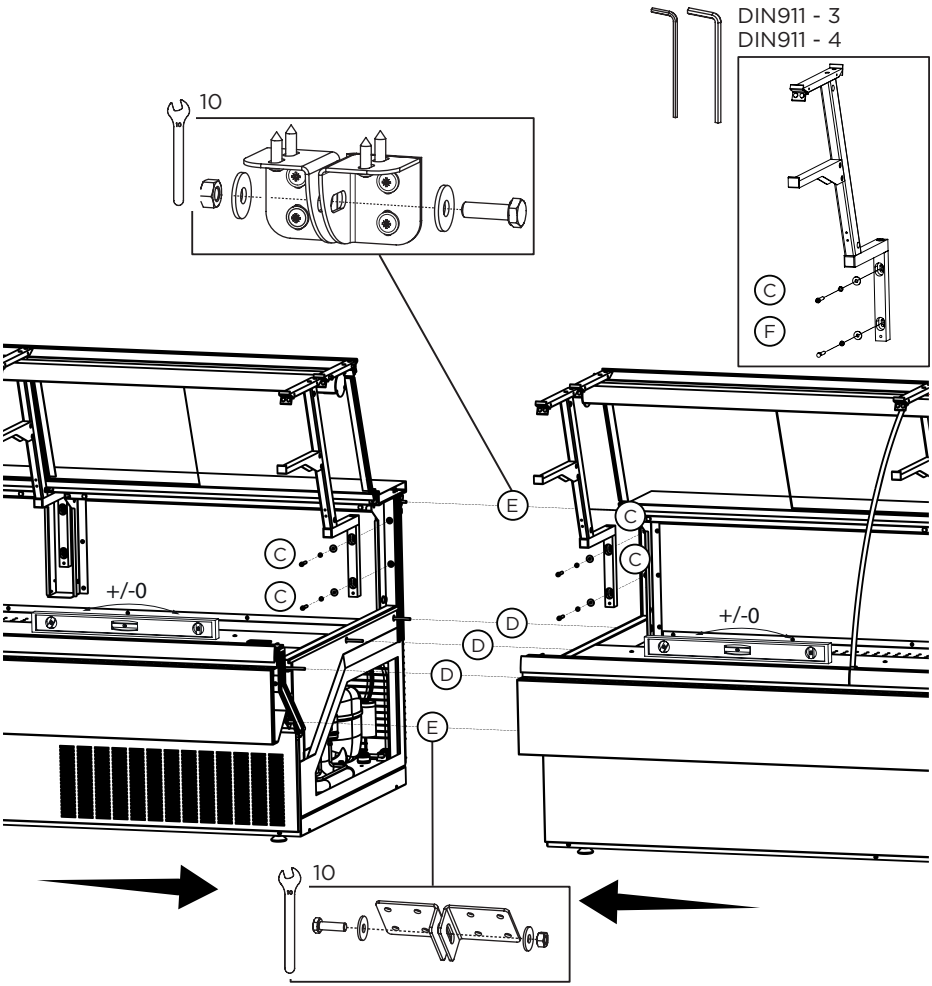

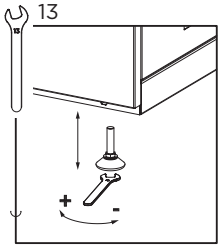

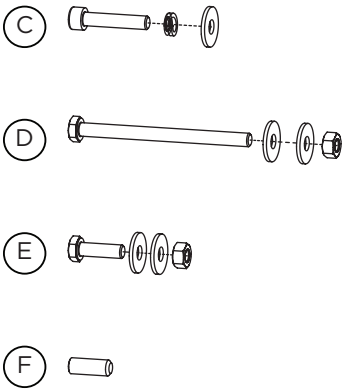

1x - DIN912 8.8 M6x30
1x - DIN127-B
1x - DIN9021 M6

1x - DIN933 M6x80
2x - DIN9021 M6
1x - DIN934 M6

1x - DIN933 M6x20
2x - DIN9021 M6
1x - DIN934 M6

1x - DIN916 M6x16

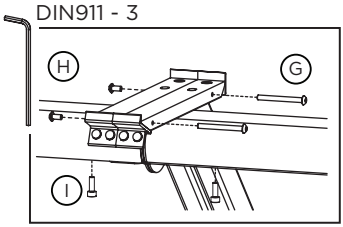

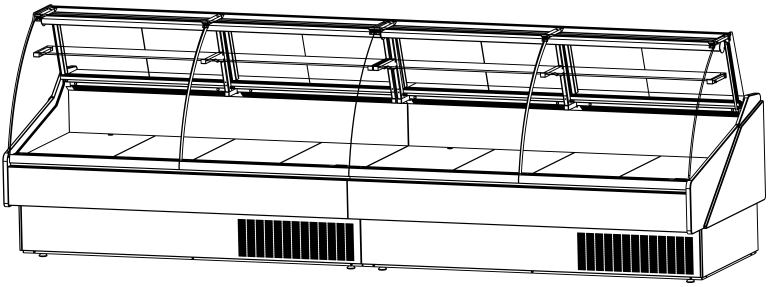

G  1x - DIN7380 M5x50

H  1x - DIN7380 M5x10

I  1x - DIN912 M4x12

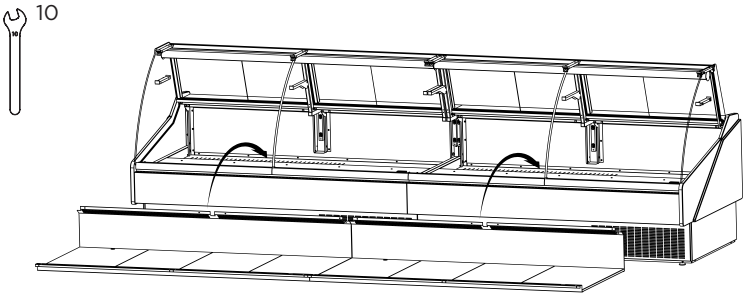
10

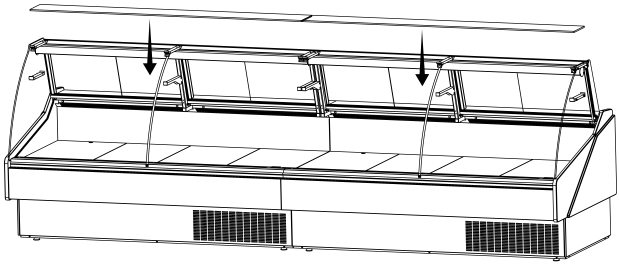

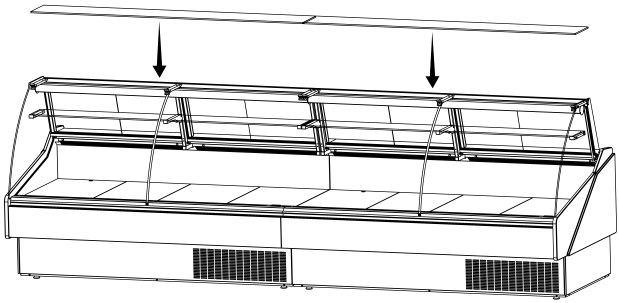

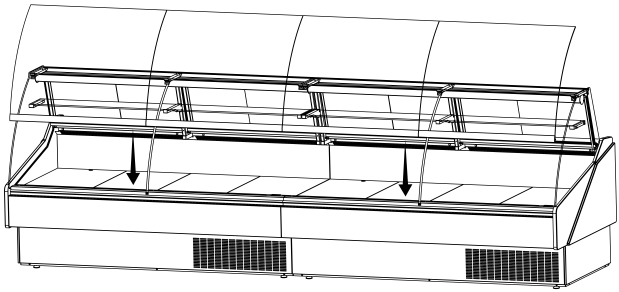

2.10 Plugging and start

To start your equipment follow the steps:

1 - Check for page with parameters inside the manual.

2 - After uncrating and placed the equipment respecting all warnings set in 2.1 chapter, and all switches are set to off position, connect the equipment.

⚠ Make sure you have the correct outlet!

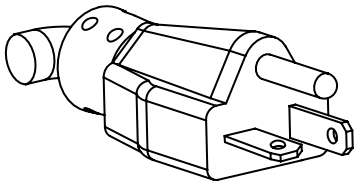

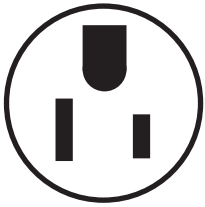

Nema-5-15P

3 - Check lights, using button referenced on chapter 2.4. If not working consult the maintenance chapter.

4 - Turn ON power button referenced in 2.4 chapter.

⚠ Noise will be heard when compressor starts! If compressor doesn't start, call a technician!

5 - Open the door and check for air movement in the discharge air grille.

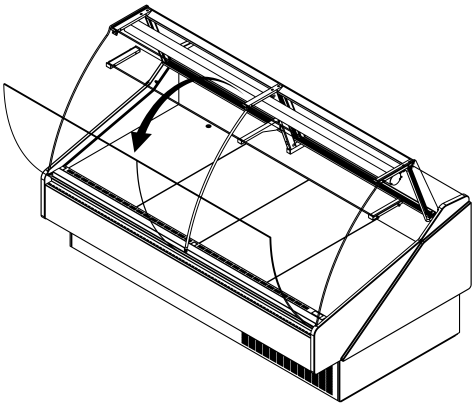

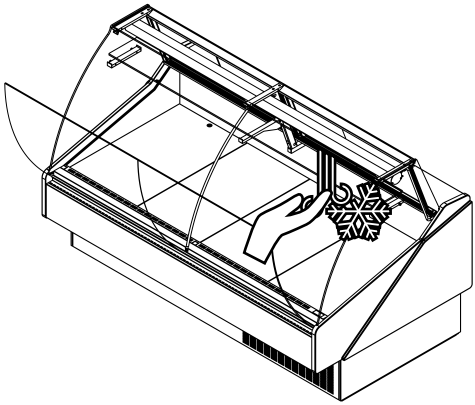

6 - Check air movement in the anti condensation system.

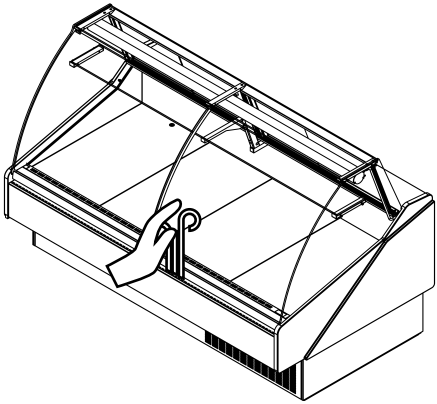

7 - Before loading, leave the equipment working for about 2h.

8 - Load your KPM-Series.

⚠ Loading must be done respecting loading limits and weight per square foot mentioned in page xx. This equipment is intended for maintaining temperature, be sure the products are cold, and not ambient temperature.

⚠ After loading check for any obstruction in the discharge and return air grilles.

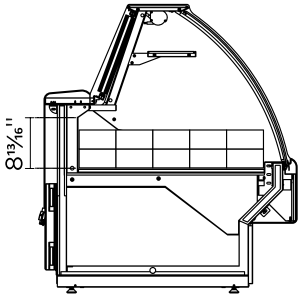

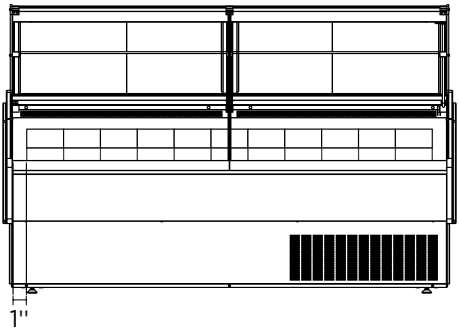

⚠ Maintain doors closed after servicing.

9 - If any problem encountered, see troubleshooting or call a qualified technician!

3 Refrigeration

3.1 Self contained refrigeration equipment and defrost

The refrigeration equipment it's laid out in the base of the equipment.

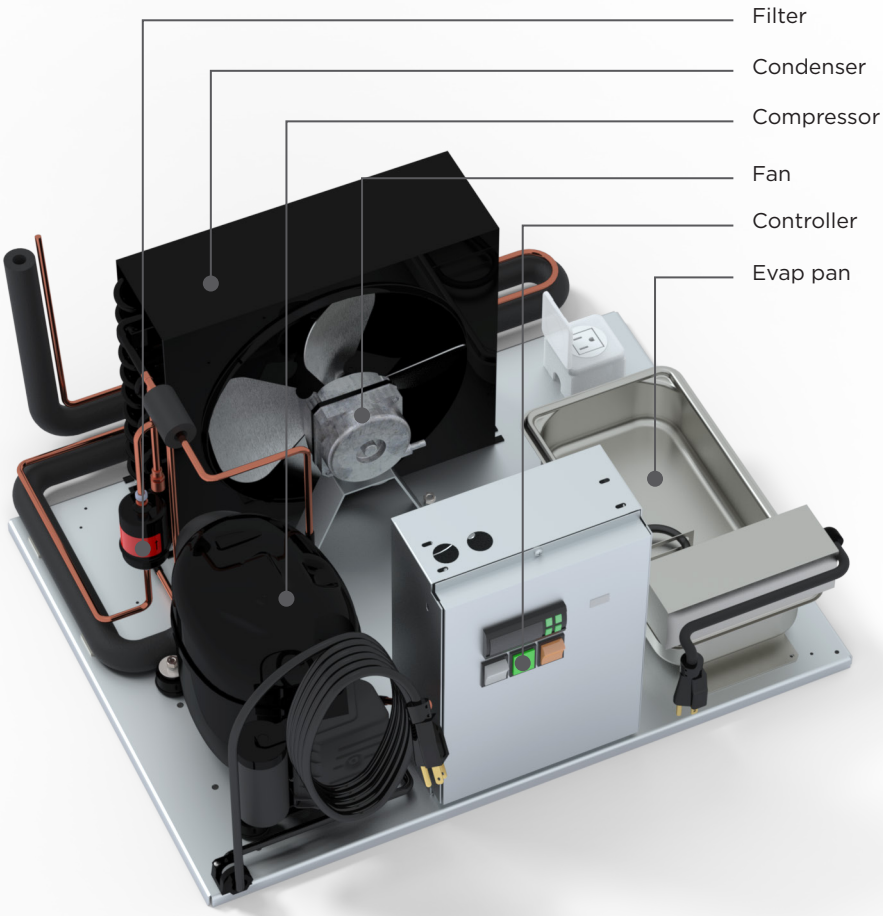
Filter
Condenser
Compressor
Fan
Controller
Evap pan

All self contained KPM series use the following equipment: capillary tube, finned coil ventilated systems (condenser/evaporator), hermetic compressor, electrical water evaporation system.

Model	Circuit pressure (psig)		Refrigerant and charge (OZ)	Defrost
	High side	Low side		
KPM-CG/FG/OF-60-S	331	174	R 404A 19,40	Automatic 3/day
KPM-CG/FG/OF-80-S	331	174	R 404A 25,39	Automatic 3/day
KPM-CG/FG/OF-100-S	331	174	R 404A 37,74	Automatic 3/day

3.2 Refrigeration loads (remotes only)

⚠ Installation of remote equipment must be done by a qualified technician.

Model	BTU*/h	Expansion valve type	
KPM-CG/SC/FG/SF/OF/SO-60-R	2959	TS2	00
KPM-CG/SC/FG/SF/OF/SO-80-R	3253	TS2	00
KPM-CG/SC/FG/SF/OF/SO-100-R	4372	TS2	00

*values presented are indicative for 14°F evap, and 90°F ambient.

4 Electrical

4.1. Electrical specifications data

⚠ Electrical data can be found on the marking plate.

Standard equipment include led lighting and anti condensation system.

115V/60Hz/1 phase

Model	Compressor F.L.A./L.R.A.	Lights	Fans		Evap pan	Anti condensation system	Total amps (self contained)
			EVP	CND			
KPM-CG/FG-60-S	9,6/49	0,14	0,70	0,45	3,33	0,13	14,35
KPM-CG/FG-80-S	8,9/47	0,18	0,70	0,45	3,33	0,26	14,52
KPM-CG/FG-100-S	16/64	0,24	1,05	0,45	3,33	0,26	14,23
KPM-OF-60-S	9,6/49		0,70	0,45	3,33		14,08
KPM-OF-80-S	8,9/47		0,70	0,45	3,33		14,08
KPM-OF-100-S	16/64		1,05	0,45	3,33		13,73

The data regards to standard options only.

Model	Total amps (remotes only)
KPM-CG/FG-60-R	0,97
KPM-CG/FG-80-R	1,14
KPM-CG/FG-100-R	1,55
KPM-OF-60-R	0,7
KPM-OF-80-R	0,7
KPM-OF-100-R	1,05

4.2. Electrical service receptacles (optional)

⚠ Service receptacles are not intended nor suitable for large motors or other external appliances. Only for scales and lighted displays.

Receptacle ampacity

Type	Max. amps
GFCI	2

4.3. Electrical diagrams

KPM-CG/FG-80-S

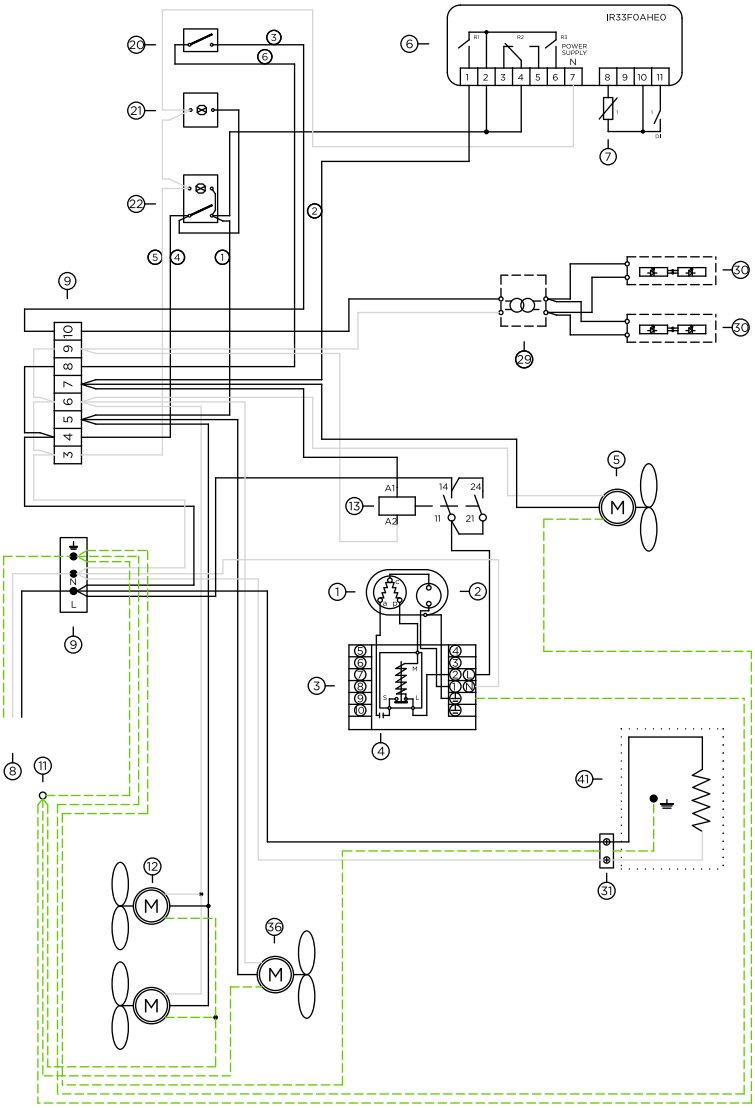

Nº	Discription
1	Compressor
2	Overload
3	Relay
4	Start capacitor
5	Condenser fan
6	Controller
7	Temperature probe
8	Earth two pin plug
9	Terminal block
11	Ground connection
12	Evaporator fan
13	Compressor relay
20	Light switch
21	Pilot light
22	Switch
29	Transformer
30	Led lighting
36	Fan anti-condensation
31	Socket
41	Evaporative condensate pan

KPM-CG/FG-80-R

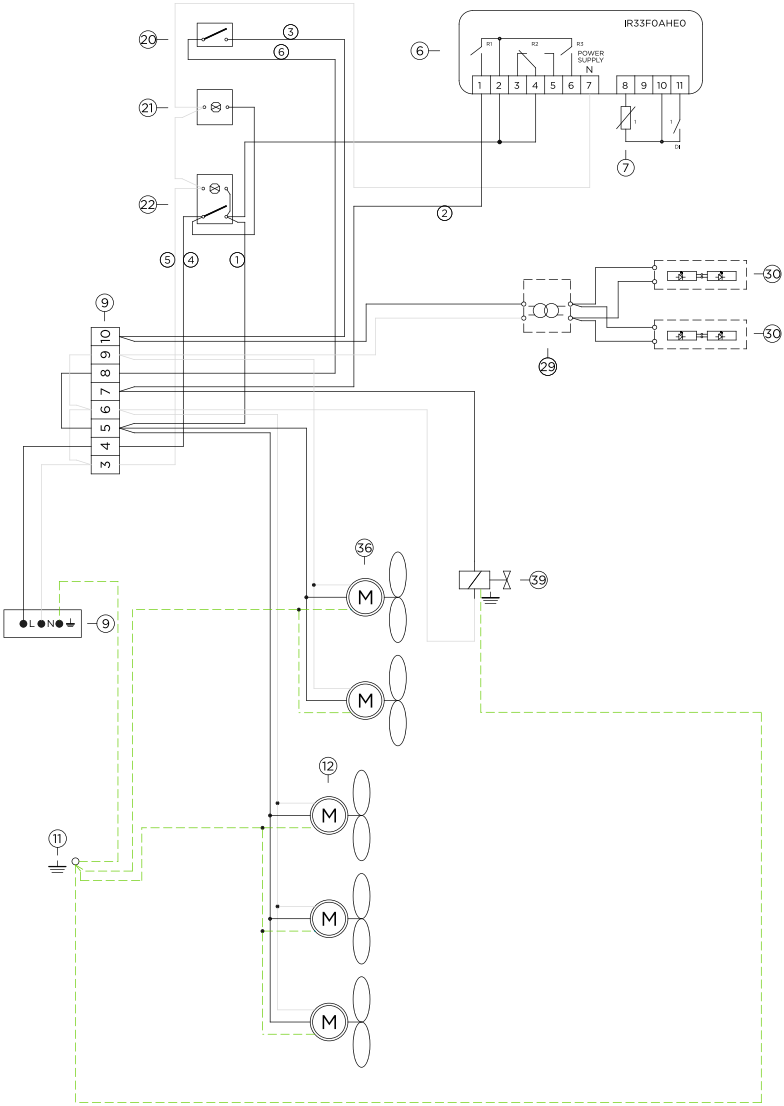
IR33F0AHE0
R1
R2
R3
POWER SUPPLY
N
1 2 3 4 5 6 7
8 9 10 11
20
21
22
3
6
6
7
2
5 4 1
9
10 9 8 7 6 5 4 3
30
30
29
36
39
9
L N
M
M
12
M
M
M
11

Nº	Discription
6	Controller
7	Temperature probe
9	Terminal block
11	Ground connection
12	Evaporator fan
20	Light switch
21	Pilot light
22	Switch
29	Transformer
30	Led lighting
36	Fan anti-condensation
39	Solenoide valve

KPM-CG/FG-80-D

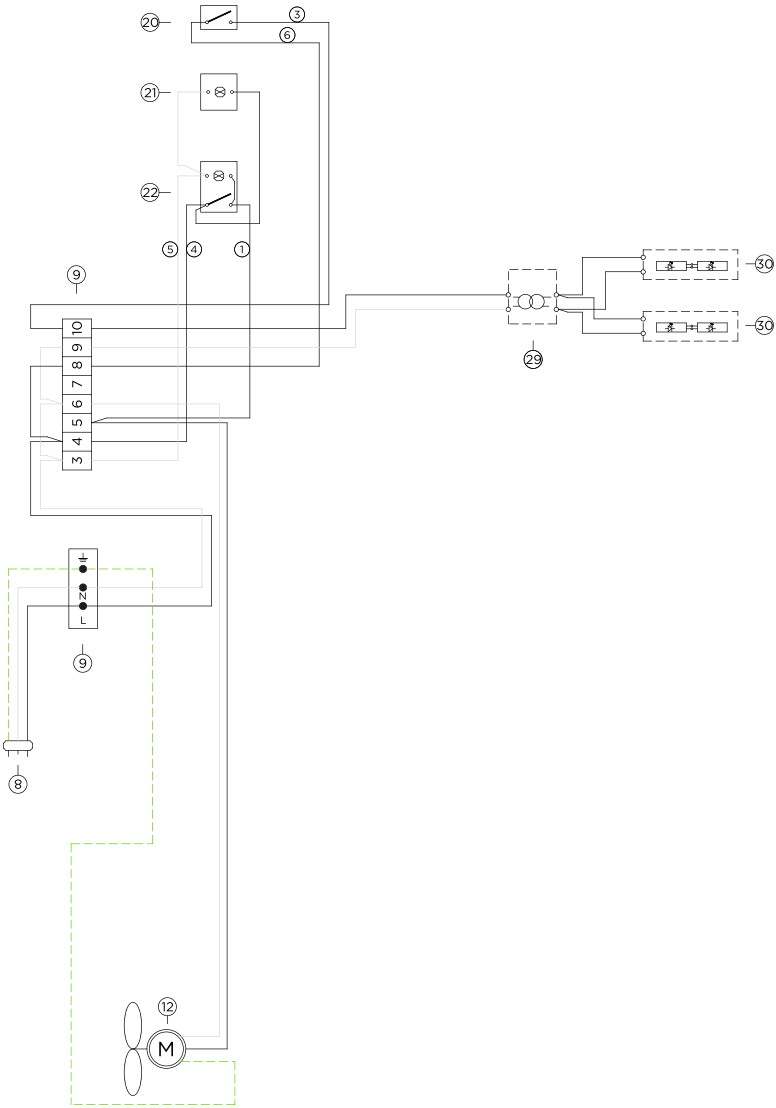

Nº	Discription
9	Terminal block
12	Evaporator fan
20	Light switch
21	Pilot light
22	Switch
29	Transformer
30	Led lighting

4.4. Electronic controller

Carel - IR33F0AHE0

TECHNICAL SPECIFICATIONS

	Model	***Voltage***	***Power***
Power supply	*IRxxxxExxxx*	*230 V~, 50/60 Hz*	*3 VA, 25 mA~max.*
	IRxxxxAxxxx	*115V~, 50/60 Hz*	*3 VA, 50 mA~max.*
	IRxxxxHxxxx	*115 to 230 V~, 50/60 Hz*	*6 VA, 50 mA~max.*
	IRxxxxLxxxx *IRxxxx0xxxx*	*12 to 24V~, 50/60 Hz, 12 to 30 Vdc* *12V~, 50/60 Hz, 12 to 18 Vdc*	*3 VA, 300 mA~/mAdc max.* *Use only SELV power supply*
Insulation guaranteed by the power supply	*IRxxxxExxxx* *IRxxxxAxxxx* *IRxxxxHxxxx*	*insulation in reference to very low voltage parts*	*reinforced* *6mm clearance, 8 mm creepage* *3750 V insulation*
		insulation from relay outputs	*basic* *3mm clearance, 4 mm creepage* *1250V insulation*
	IRxxxxLxxxx *IRxxxx0xxxx*	*insulation in reference to very low voltage parts*	*externally guaranteed by safety transformer (SELV power supply)*
		insulation from relay outputs	*reinforced* *6mm clearance, 8 mm creepage* *3750 V insulation*
Inputs	*S1 (probe 1)*	*NTC (IRxxx0xxxxx) o NTC e PTC (IRxxx7xxxxx)*	
	S2 (probe 2)	*NTC (IRxxx0xxxxx) o NTC e PTC (IRxxx7xxxxx)*	
	DI 1 *S3 (probe 3)*	*free contact, contact resistance < 10 Ω, closing current 6 mA* *NTC (IRxxx0xxxxx) o NTC e PTC (IRxxx7xxxxx)*	
	DI 2 *S4 (probe 4)*	*free contact, contact resistance < 10 Ω, closing current 6 mA* *NTC (IRxxx0xxxxx) o NTC e PTC (IRxxx7xxxxx)*	
	Maximum ditance of probes and digital inputs less than 10 m. ***Note:*** *during installation keep the power and loads connection separate from probe cables, digital inputs, repeater display and supervisory system.*		
Probe type	*Std. CAREL NTC*	*10 kΩ at 25 °C, - 50T90 °C range*	
		measurement error:	*1 °C in the - 50T50 °C range*
			3 °C in the - 50T90 °C range
	NTC high temperature	*50 kΩ at 25 °C, - 40T150 °C range*	
		measurement error:	*1,5 °C in the - 20T115 °C range*
			4 °C in the - 20T115 °C range
	PTC std. CAREL (specific model)	*985 Ω a 25 °C, range da - 50T150 °C*	
		measurement error:	*2 °C in the - 50T50 °C range*
			4 °C in the - 50T150 °C range

Relay outputs	*depending on the model*					
		EN 60730-1			*UL 873*	
	model	*relay*	*250 V~*	*operating cycles*	*250 V~*	*operating cycles*
	IRxxxx(E,A) (P,Q,S,U,V,X,Y,Z)xxx	*R2 (*)*	*5(1)A*	*100000*	*5 A resistive 1FLA 6 LRA C 300*	*300000*
	IRxxxx(E,A) (N,R,C,B,A,M,L,T)xxx	*R3 (*)*	*5(1)A*	*100000*	*5 A resistive 1FLA 6 LRA C 300*	*300000*
	IRxxxx(E,A) (N,R,C,B,A,M,L,T)xxx IRxxxx(O,L,H) (N,R,C,B,A,M,L,T)xxx	*R1,R2 R2,R3 R4 (*)*	*8 (4)A N.O. 6 (4)A N.C. 2 (2)A N.O./N.C.*	*100000*	*8 A resistive 2FLA 12 LRA C300*	*300000*
	IRxxxx(E,A) (P,Q,S,U,V,X,Y,Z)xxx IRxxxx(O,L,H) (N,R,C,B,A,M,L,T)xxx	*R1 R1 (*)*	*12 (2)A N.O./N.C.*	*100000*	*12 A resistive 5FLA 30 LRA C300*	*300000*
	insulation from very low voltage parts			*reinforced*		
				6 mm clearance, 8 mm creepage		
				3750 V insulation		
	insulation between the relay outputs indipendent			*basic*		
				3 mm clearance, 4 mm creepage		
				1250 V insulation		
SSR outputs	Max output voltage : 12 Vdc, Output resistance: 600 Ω, Max output current: 20 mA					

(*): Relay not suitable for fluorescent loads (neon lights, ...) that use starters (ballasts) with phase-shift capacitors. Fluorescent lamps with electronic control devices or without phase-shift capacitors can be used, within the operating limits specified for each type of relay.

Connessioni		***Type of connection***			***Cross-section Max. current***
	Model IRxxxxxx0xx IRxxxx(E,A)x1xx IRxxxxxx2xx IRxxxx(E,A)x3xx IRxxxx(E,A)x5xx	*Relay screw faston removable faston vertical screw*	*P. Supply screw faston removable faston vertical screw*	*Probes screw removable removable screw vertical screw*	*for wires from 12 A 0.5 a 2.5 mm²*

the installer has to provide the correct dimensioning of the power supply and cable connection between the instruments and the loads. Depending on the model, the maximum current in the common terminals 1, 3 or 5 is 12 A. When using the controller at maximum operating temperature and full load, use cables featuring a maximum operating temperature of 105 °C at least.

⚠ Controller must be handled by a qualified technician.

Signals on the display

The blinking status indicates a request for activatuin that cannot be implemented until the end of the corresponding delay times.

Icon	Function	ON	OFF	blink	Startup
	COMPRESS.	compressor ON	comp. OFF	compressor request	
	FAN	fan ON	fan OFF	fan request	
	DEFROST	defrost in progress	defrost not required	defrost request	
AUX	AUX	auxiliary output AUX active	auxiliary output AUX not active	anti-sweat heater function active	
	ALARM	delayed external alarm (before the expiry of the time "A7")	no alarm present	alarms in normal operation (eg. high/low temp.) or alarm from ext. digital input immediate or delayed	
sent	CLOCK	at least one timed defrost has been set	no timed defrost is present	clock alarm	ON if Real-Time Clock present
	LIGHT	auxiliary output LIGHT ACTIVE	auxiliary output LIGHT NOT ACTIVE	anti-sweat heater function active	
	SERVICE		no malfunction	malfunction (eg. EEPROM error or probe fault)	
HACCP	HACCP	HACCP function	HACCP function enabled	HACCP alarm (HA and/or HF) not enabled	
	CONTINUOUS CYCLE	enabled	not enabled	request	

Controller must be handled by a qualified technician.

Buttons on the keypad

Normal operation

Button	Press. the button alone	Pressing together with other buttons		
Prg / mute	· if pressed for more than 5 s accessed the menu for setting type "F" (frequent) parameters · **in the event of alarm:** silences the audible alarm (buzzer) and disables the alarm relay	· if pressed for more than 5 s together with the **SET** button, accesses the menu for setting the type "C" (configuration) or downloading the parameters · if pressed for more than 5 s together with the **UP/AUX** button resets any alarm with manual reset	**Start-up :** if pressed for more than 5 s at start-up, starts the default parameter setting	**Automatic address assignment:** if pressed for 1 s enters the automatic serial address assigning procedure
▲ / aux	if pressed for more than 1 s, enables/disables the auxiliary output	· if pressed for more than 5 s together with **DOWN/DEF** button, enables/disables the continuous cycle operation · if pressed for more than 5 s with **SET** button, starts the procedure for printing the reports (function available, with management to be implemented) · if pressed for more than 5 s together with **PRG/MUTE** button, resets any active alarm with manual reset		
def / ▼	if pressed for more than 5 s, enables/disables a manual defrost	· if pressed for more than 5 s together with **UP/AUX** button, enables/disables the continuous cycle operation · if pressed for more than 1 s together with **SET** button, displays a submenu with the **HACCP** alarm parameters (HA, HAn, HF, HFn)		
Set	if pressed for more than 1 s, displays and/or set the set point	· if pressed for more than 5 s together with **PRG/MUTE** button, accesses the menu for setting the type "C" parameters "C" (configuration) or downloading the parameters · if pressed for more than 1 s together with **DOWN/DEF** button, displays a submenu with the **HACCP** alarm parameters (HA, HAn, HF, HFn) · if pressed for more than 5 s together with **UP/AUX,** starts the procedure for printing the report (function available, with management to be implemented)		

Main parameters

Symbol	Code	Parameter	Models	UOM	Type	Min	Max	Def.
	/3	Probe display response	MSYF	-	C	0	15	0
	/5	Select °C or °F 0: °C 1: °F	MSYF	flag	C	0	1	0
	/A2	Configuration of probe 2 (S2) 0: Probe absent 1: Product probe (display only) 2: Defrost probe 3: Condenser probe 4: Antifreeze probe	YF MS	- -	C C	0 0	4 4	2 2
	/c1	Calibration of probe 1	MSYF	°C/°F	C	-20	20	0,0
	St	Temperature set point	MSYF	°C/°F	F	rl	r2	0,0
	rd	Control delta	SYF	°C/°F	F	0,1	20	2,0
	c2	Minimum compressor OFF time	SYF	min	C	0	15	0
	dI dP1	Interval between defrosts Maximum defrost duration, evaporator	SYF SYF	hours min	F F	0 1	250 250	8 30

5 Maintenance

5.1 Exterior cleaning

All operations must be done with the unit disconnected.

Clean surfaces (glass/metal/plastic) with soft detergents or warm water. Do not use abrasive cleanser.

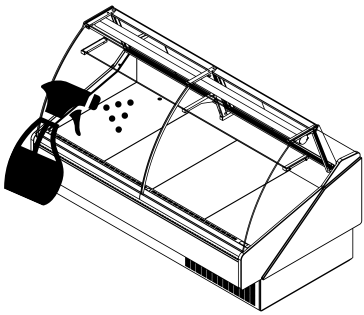

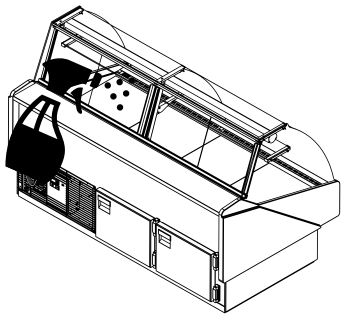

For easier cleaning remove the front glass (instructions below).

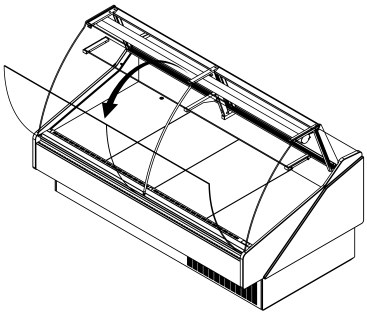

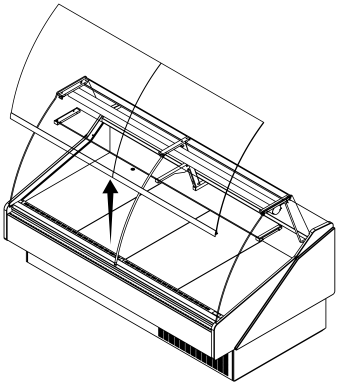

5.2 Interior cleaning

⚠ All operations must be done with the unit disconnected.

Clean surfaces (glass/metal/plastic) with soft detergent or warm water. Do not use abrasive cleanser.

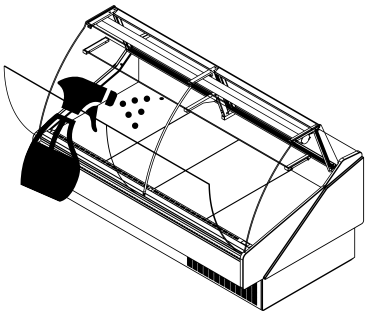

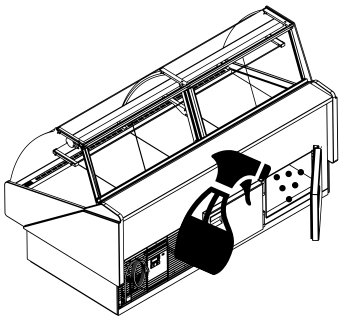

5.3 Shelf removing

⚠ All operations must be done with the unit disconnected.

To remove or adjust shelves take care with light connections.

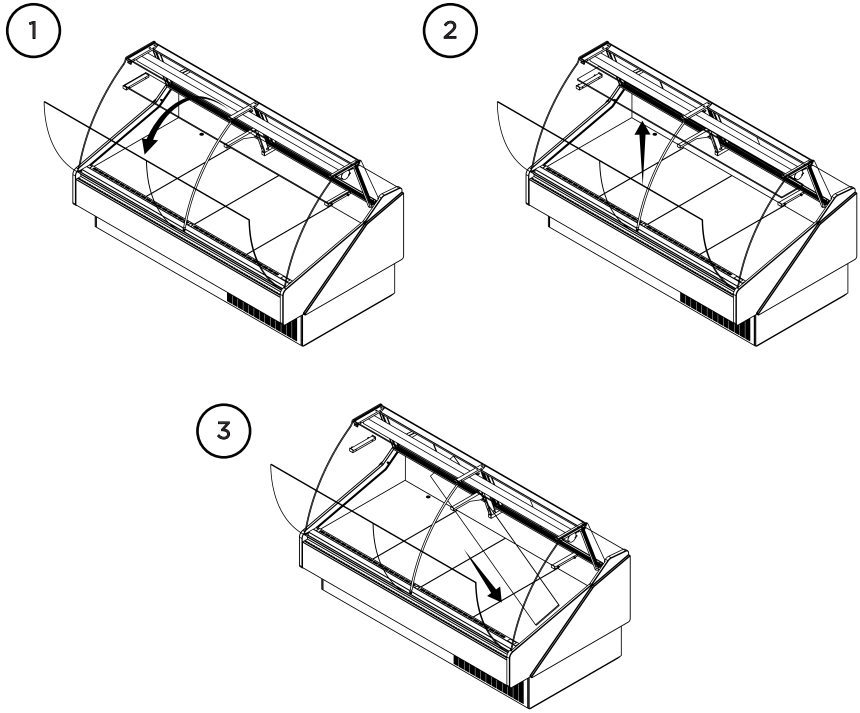

5.4. Back Sliding doors removal

Back sliding doors are easy to take off.
- Grab door push up and then tilt the bottom towards you.

To put the door back on, just reverse the previous step.

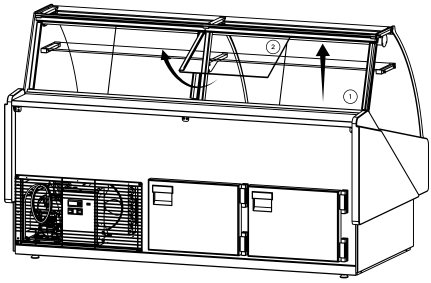

5.5 Light substitution

To replace lights follow the steps:

⚠ All operations must be done with the unit disconnected.

- Disconnect the light
- Unscrew the light holder and remove the light
- Insert a new light in the same place of the old one, screw the holder connect it
- Screw the light and connect it
- Plug and turn on the light

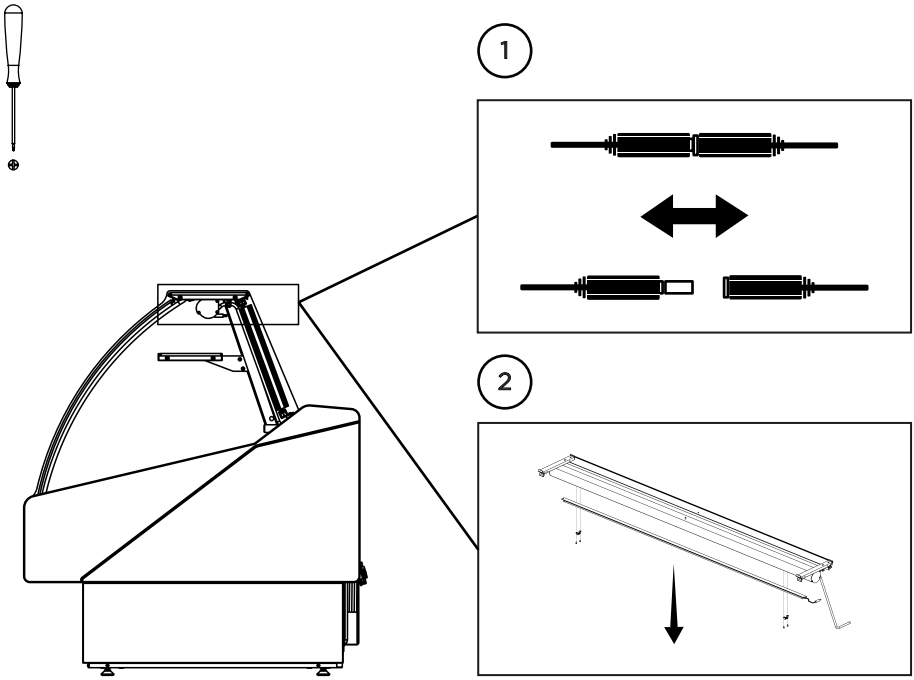

5.6 Panels and protection grille removal

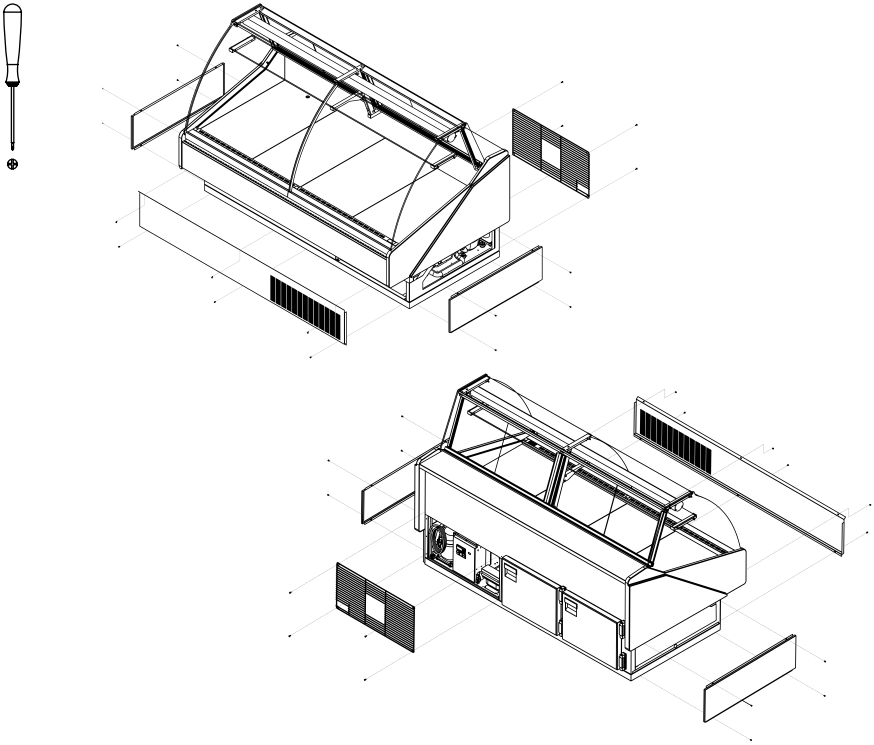

5.7 Condenser cleaning

⚠ This operation must be performed by a qualified technician.

⚠ All operations must be done with the unit disconnected.

Condenser must be regularly cleaned (every month). Use a brush or vacuum it.
To get to the condenser must remove frontal panel.

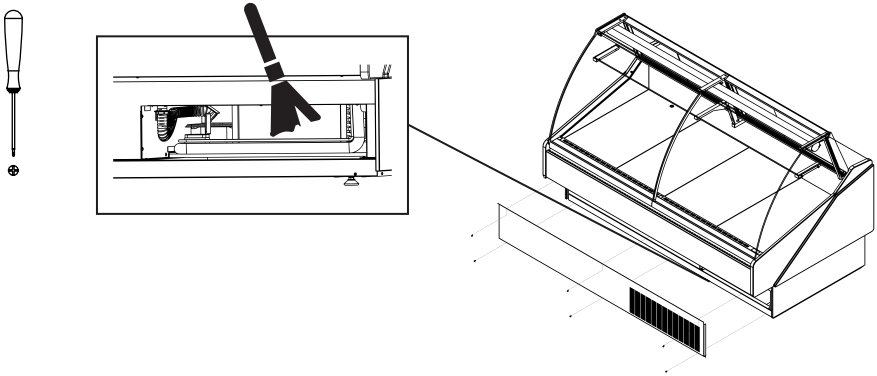

5.8 Evaporator cleaning

⚠ This operation must be performed by a qualified technician.

⚠ All operations must be done with the unit disconnected.

To access the evaporator:

- Open your unit
- Lift and remove exposition panels
- Use tool for the screws and clean

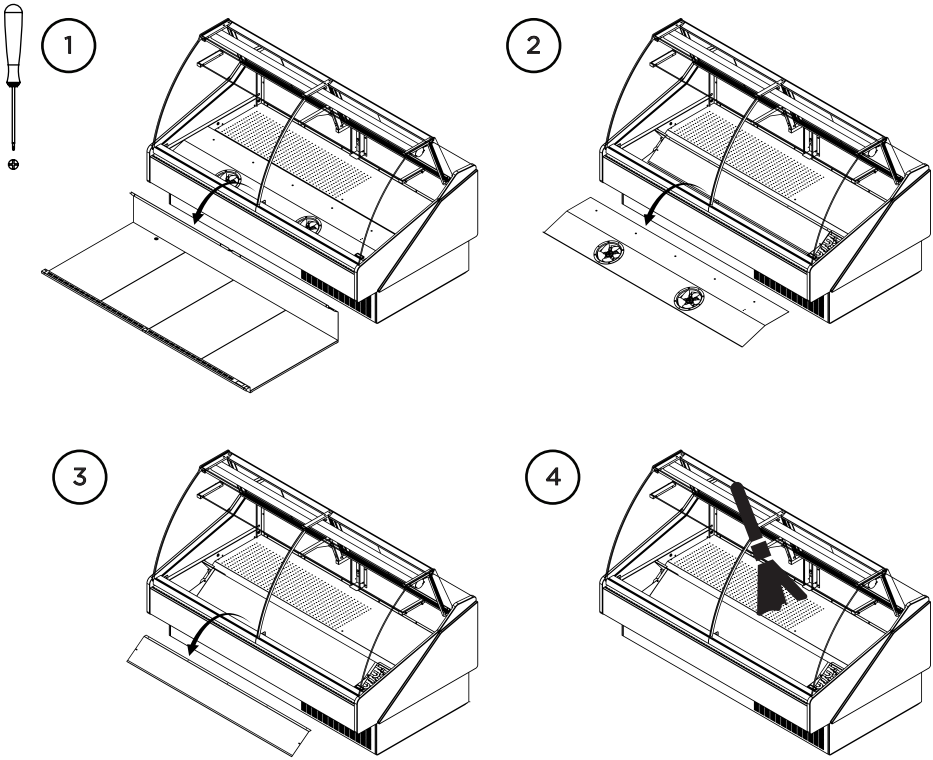

5.9 Evap Pan cleaning

⚠ This operation must be performed by a qualified technician.

⚠ All operations must be done with the unit disconnected.

⚠ Pan can be hot!

⚠ This operation must be done weekly.

To access the evap pan:

- Remove protection grille.
- Unplug the evap pan.
- Relieve the screws and take the evap pan off.
- Clean with soft detergent or warm water.

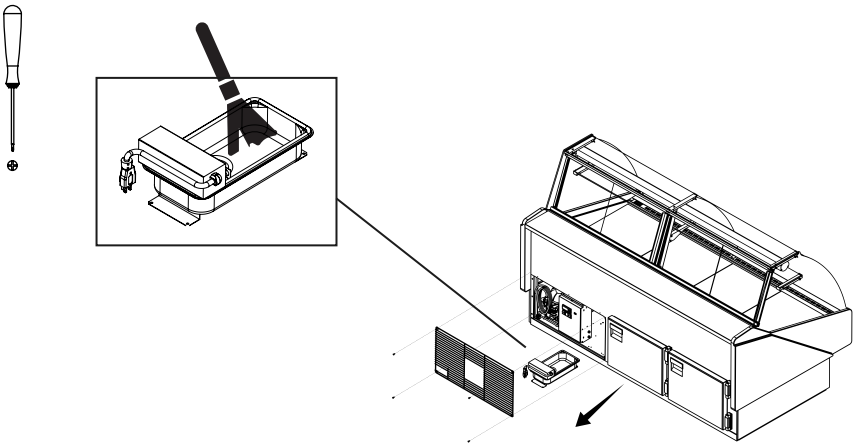

5.11 Drain inspection

⚠ Check for drain obstruction and correct position every month (Remotes only).

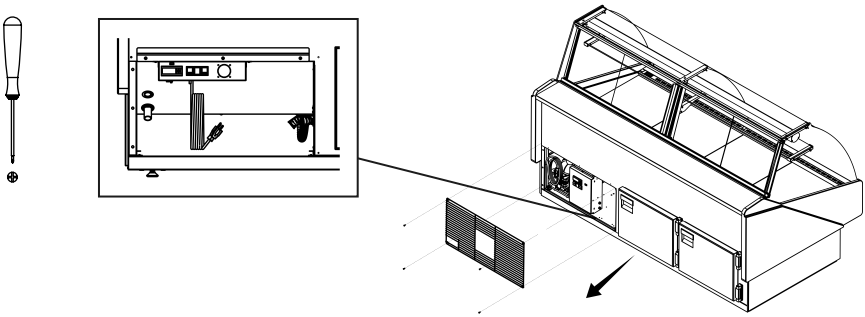

5.12 Glass type conversion model

⚠ This operation must be performed by a qualified technician.

⚠ Contact distributor for specific manual to assist in conversion.

6.1 Troubleshooting

⚠ Service must be performed by a qualified technician.

Doors not closing:

Check for leveled floor.

Check for obstruction.

Remove doors and check the bearings.

Lights not working:

Check light switch position.

Check light connections.

Warm case temperature:

Check for air return grille obstruction.

Check for air drafts.

Check store temperature.

Check for condenser obstruction and cleaning.

Check for frozen evaporator.

Check set point.

Display area is over filled.

Fans not working:

Check electrical connections.

Check for any debris.

Case not aligning:

Check for leveled floor.

Check instructions for joining.

Display not working:

Check main power switch position..

Check electrical connections.

Compressor not starting:

Disconnect switch open.

Blown fuse.

Overload protective tripped.

Low charge of refrigerant.

Relay defective.

Equipment runs constantly:

Condenser dirty.

Condenser fan malfunction.

Temperature and relative humidity too high.

Starting relay burns out:

Low voltage.

High voltage.

Compressor short cycles.

Incorrect running capacitor.

Incorrect relay.

Head pressure too high:

Unit overcharged.

Air or other non condensable gases in the system.

Clogged condenser.

Defective condenser fan motor.

Unit location too hot.

Restriction in charge line.

Head pressure too low:

Insufficient refrigerant charge.

Leak in the system.

Cold location.

Noisy unit:

Compressor oil charge low.

Fan blade causing vibrations.

Tube rattle.

Loose parts.

Case not leveled.

6.2 Service

⚠ This operation must be performed by a qualified technician.

⚠ For spare parts, contact your distributor.

Service by	Type of action	Date	Serial number and model

7 Warranty

12 month warranty for all parts from the invoice date. A new part will be provided free of charge. Defective part must be returned to the manufacturer.

Warranty claims: All claims must include model number, serial number, date of purchase, date of installation and additional information about the supposed defect.

All service work must be authorized by MVP group.

MVP group reserves the right to select the service company.

Loss of food or other damages caused by faulty equipment aren't covered by this warranty.

Warranty does not cover damage when uncrating.

Work made necessary, by lack of maintenance or cleaning are not covered by this warranty.

Warranty does not cover damage or malfunction result of improper use or installation.

Warranty does not cover negligence, misuse and operation on wrong voltage.

Warranty does not apply if the serial number is altered or defaced.

Failure to comply with the instructions in this manual shall avoid warranty.

8 Notes

This page has been left blank intentionally.

HYDRA KOOL

MVP GROUP CORPORATION
www.mvpgroupcorp.com