eStellen™

Pull Down Electronic Kitchen Faucet

LG529-ESAB Finish*(B)* ❑
LG529-ESAC Finish*(C)* ❑
LG529-ESAS Finish*(S)* ❑

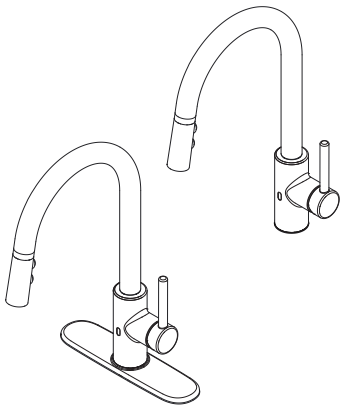

- 1 or 3-Hole Installation
- Pforever Seal

Specifications

Features

- 1.8 GPM Flow Rate
- React™ Touch-Free Technology
- 3 Function Pull-Down Sprayer
- 1 or 3-Hole Installation; Deck Plate or Single Hole Mounting Option
- Smart Stop
- Low Battery Indicator
- Manual Override
- AccuDock™ Sprayhead Docking
- Forward Handle Operation
- Pfast Connect™
- Includes AC Adapter
- Optional Battery Pack, Order 952-007
- Pforever Seal Ceramic Disc Valve
- Pforever Warranty®

Code Compliance

Pfister products are designed and manufactured in compliance with the following standards and codes:

- IAPMO Certified
- CSA B125 Certified
- ASME A112.18.1
- CEC Compliant
- Cal Green Compliant
- NSF 61/9 Annex G (Low lead)
- ADA Compliant-ANSI A117.1 (Lever handles only)
- ASME A112.18.3 (Backflow Prevention)

Dimensions

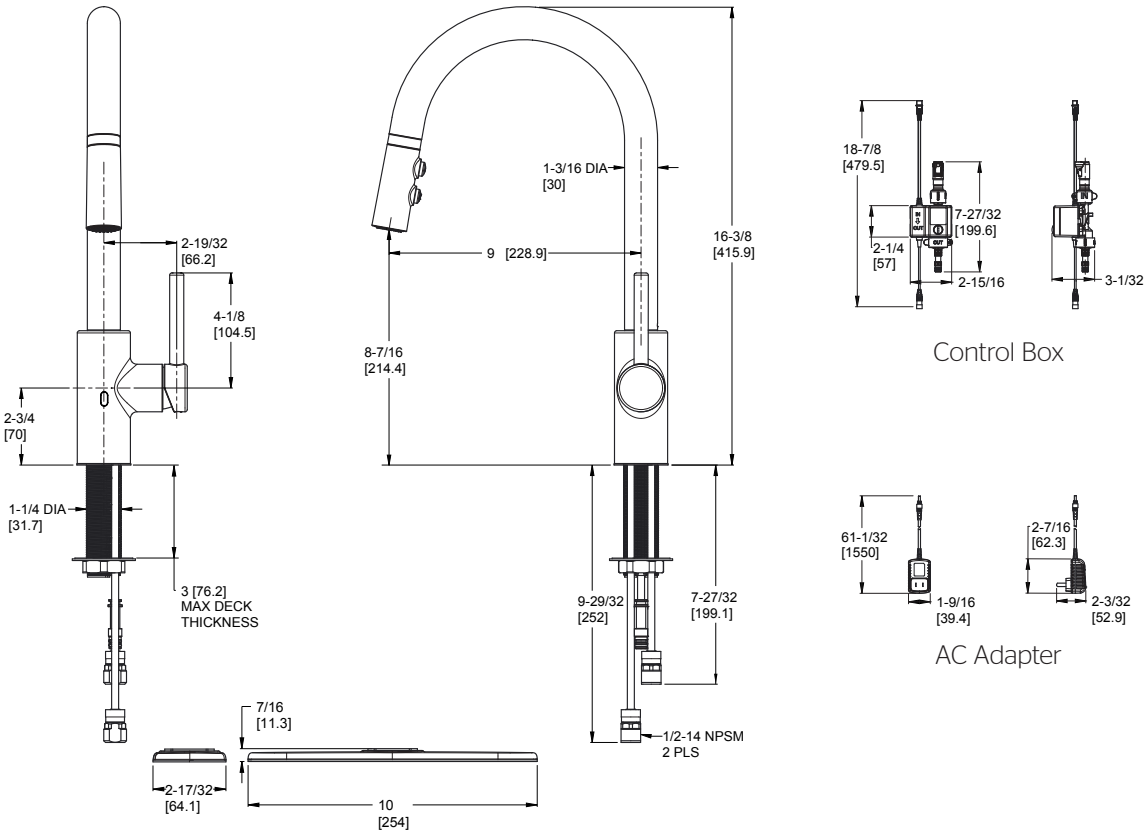

Ø1-3/8 Min to Ø1-1/2 Max. Deck Hole Openings

Copyright © 2020, Pfister Inc.