QS5504 pivot

fitting instructions

5 YEAR WARRANTY

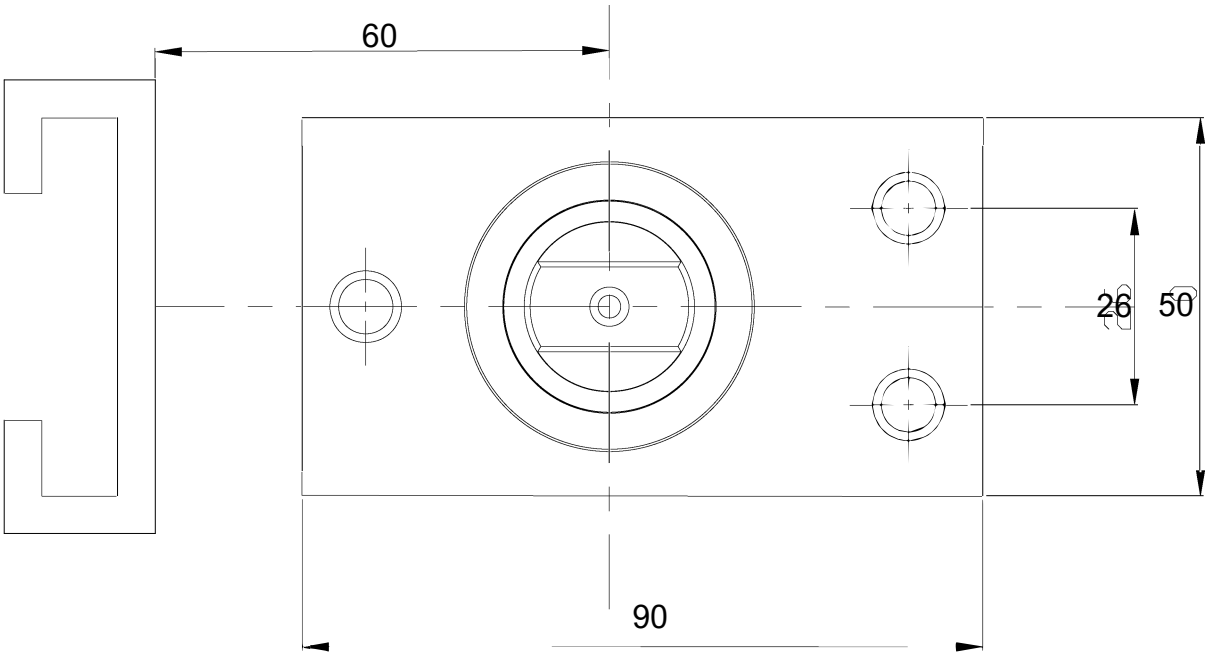

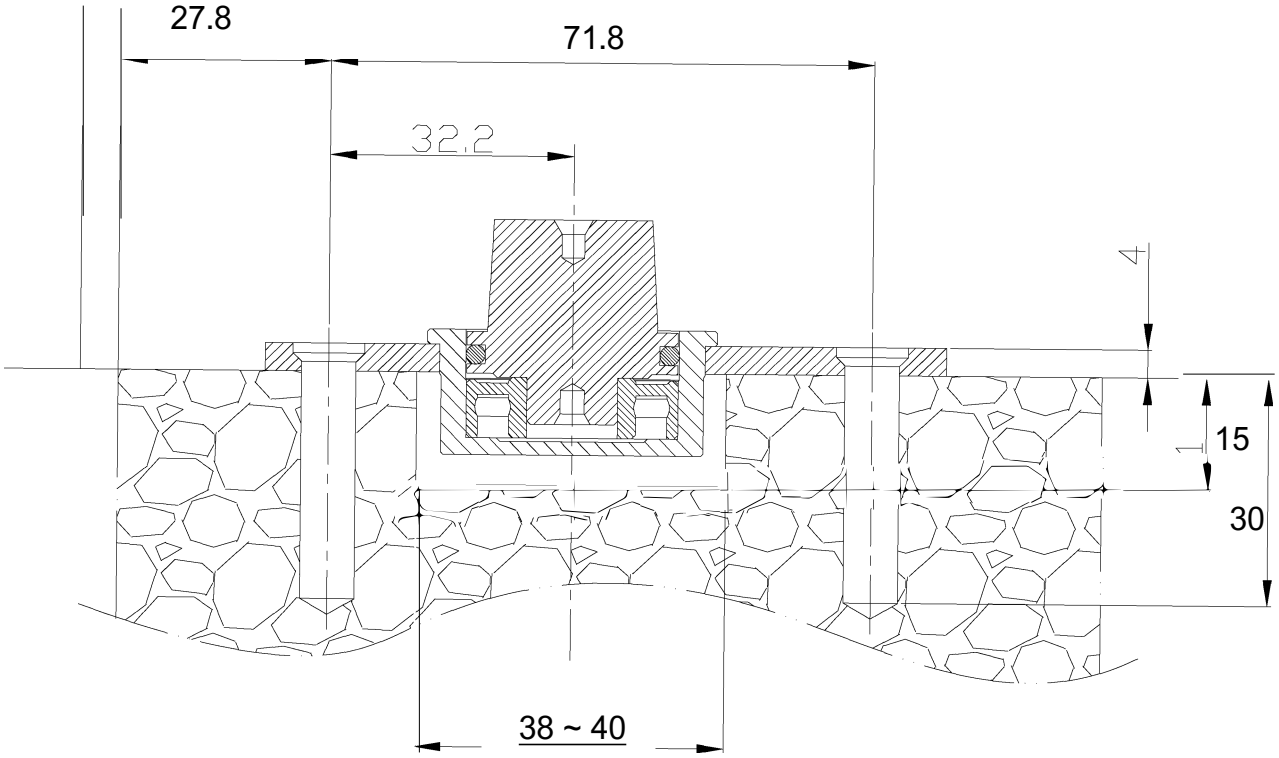

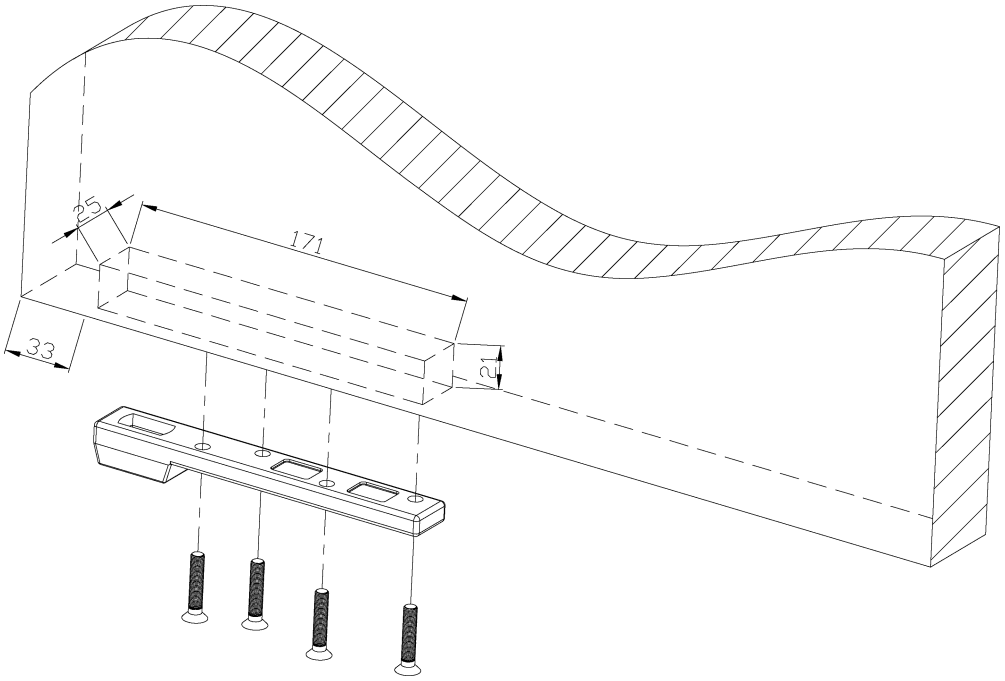
25
171
33
21

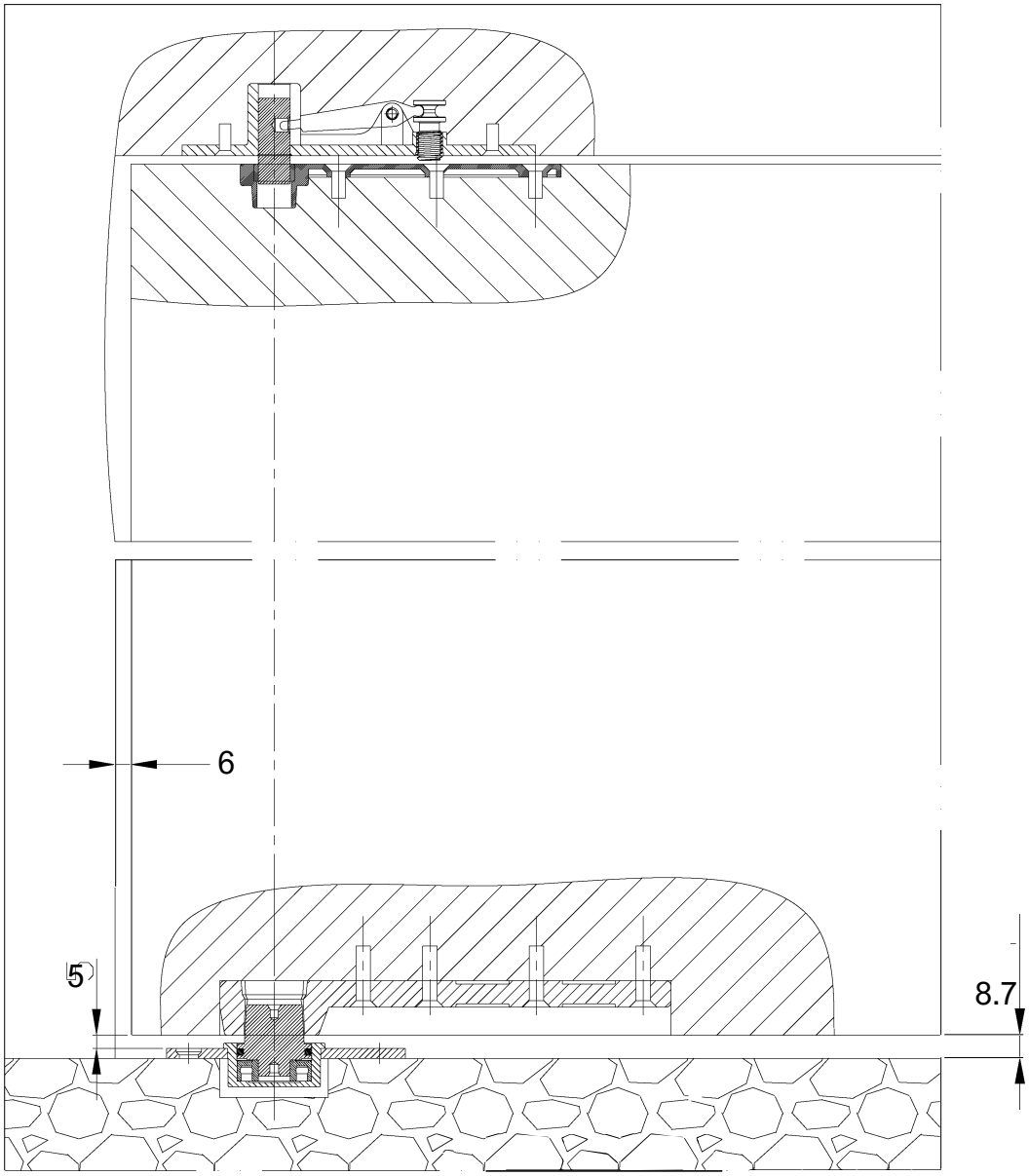
6
5
8.7