Hampton
LED MIRROR 1200MM

Features

- Adjustable colour temperature (6000, 4000 or 3000K)
- Built-in demister
- Illuminating touch sensors for light and demister
- 5 mm thick glass mirror with inset illuminated accent
- Copper free – reduces corrosion and is better for the environment
- Includes wall mounting screws and anchor plugs
- 220-240V AC 50/60Hz
- IP44 rating
- SAA approved

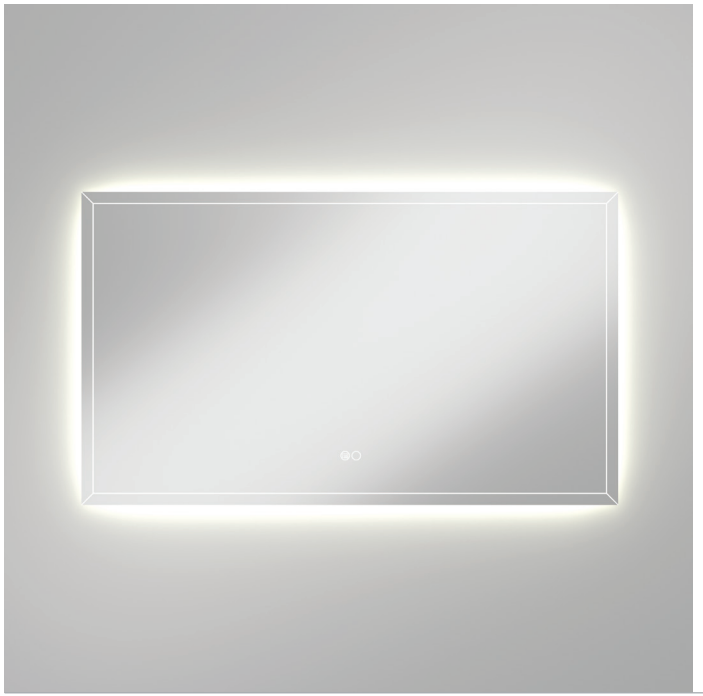

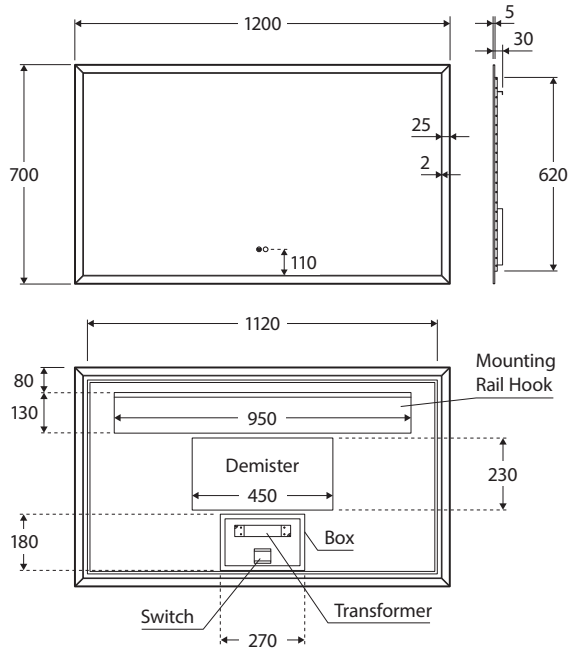

Available in

1200W x 700H mm

LED01-120

Adjustable Colour Temperature

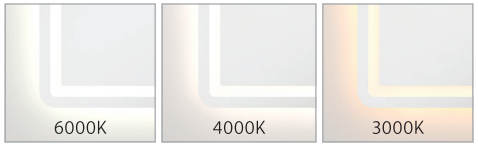

Cleaning & Care

For best results, clean mirrors with a combination of 30% methylated spirits to 70% water and a soft, non-abrasive cloth designed for use on glass surfaces.

Installation

Mirror must be installed by a licensed electrician in accordance with local regulations.

While we aim to ensure specifications are correct at the time of publication, Fienza reserves the right to make modifications without prior notice. Physical colour may vary from image shown.
All measurements are shown in millimetres. Always use physical product measurements for mark-ups and roughing-in as the technical drawing may differ from actual product received.