TrueVIS MG-640 / MG-300

User's Manual

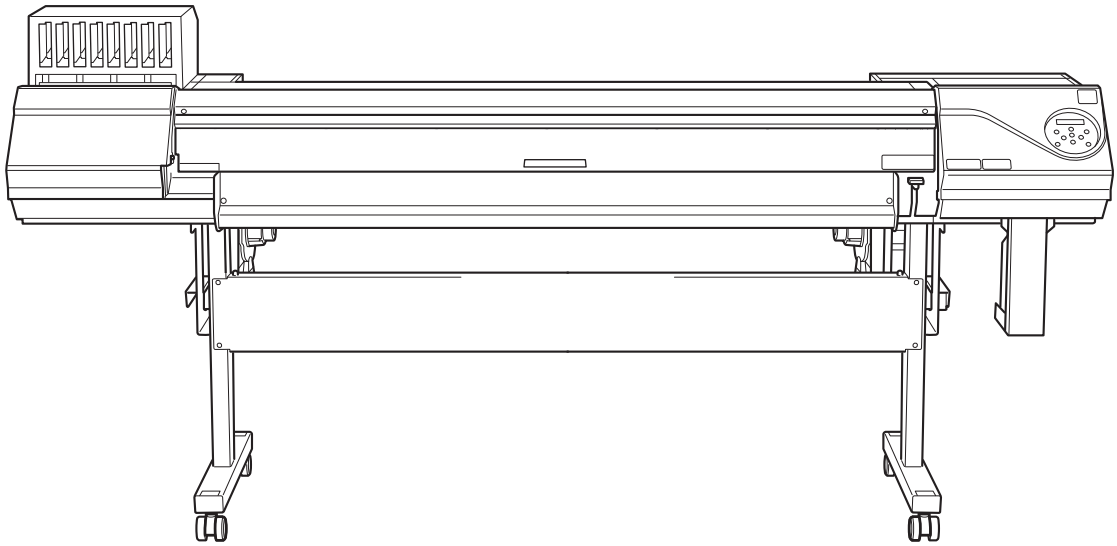

Thank you very much for purchasing this product.

- To ensure correct and safe usage with a full understanding of this product's performance, please be sure to read through this manual completely.
- Unauthorized copying or transferal, in whole or in part, of this manual is prohibited.
- The specifications of this product and the contents of this operation manual are subject to change without notice.
- The operation manual and the product have been prepared and tested as much as possible. If you find any misprints or errors, please inform us.
- Roland DG Corporation assumes no responsibility for any direct or indirect loss or damage that may occur through use of this product, regardless of any failure to perform on the part of this product.
- Roland DG Corporation assumes no responsibility for any direct or indirect loss or damage that may occur with respect to any article made using this product.

FA02998

R1-230126

http://www.rolanddg.com/

Copyright © 2023 Roland DG Corporation

Roland DG Corporation

Contents

Basic Handling Methods 7

Basic Information 8
- Part Names and Functions 9
  - Printer Unit 9
  - Operation Panel 14
  - Display Screen 15
- About the Media Used 16
  - Types of Media 16
  - Conditions for Usable Media 17
- Menu List 18
  - Main Menu 18
  - Function Menu 22
  - Language and Unit Menu 23

Basic Operations 24
- Power Supply Operations 25
  - Turning the Power On 25
  - Turning the Power Off 27
  - Precautions When Operating the Power Supply 28
  - Sleep Mode (Power-saving Feature) 29
- Setup of Media 30
  - Setup of Roll Media 30
  - Setup of Sheet Media 49
  - Separating the Media 62
- What to Do First after Installation 63
  - Accurately Adjusting the Misalignment of the Ink Landing Position 63
- Checking before Output 65
  - LAN (Local Area Network) Settings 65
  - Preventing Sedimentation in Inks 65
- Pausing and Canceling Output 66
  - Pausing and Resuming Output 66
  - Canceling Output 66
- Replacing Ink Cartridges 67
  - Out-of-ink Warnings 67
  - Preventing Sedimentation in Inks 67

Output Method 68

Printing Method 69
- Preparations before Printing Output 70
  - Checking the Daily Workflow 70
  - Printing Tests and Normal Cleaning 71
- Printing Output 73
  - Step 1: Batch Settings for Printing 73
  - Step 2: Starting Output 82

Cutting Method 84
- Preparations before Cutting Output 85
  - Step 1: Preventing Pulling of the Media with Undue Force 85
  - Step 2: Adjusting Cutting 86
- Cutting Output 88
  - Step 1: Batch Settings for Cutting 88
  - Step 2: Starting Output 93

Printing and Cutting Method 94
Preparations before Printing and Cutting Output 95
Step 1: Printing Tests and Normal Cleaning 95
Step 2: Adjusting Cutting 97
Printing and Cutting Output 99
Step 1: Batch Settings for Printing and Cutting 99
Step 2: Starting Output 113

How to Cut with Crop Marks 115
Preparations before Cutting with Crop Marks 116
What Is Cutting with Crop Marks? 116
Step 1: Printing Tests and Normal Cleaning 117
Step 2: Adjusting Cutting 119
Cutting with Crop Marks 121
Step 1: Batch Settings for Cutting with Crop Marks 121
Step 2: Starting Output with Crop Marks 135
Step 3: Preparations for Cutting Output 137
Step 4: Starting Cutting Output 141

Optimizing Quality and Efficiency 142

Optimizing the Output Quality 143
Using the Correction Functions 144
Adjusting the Misalignment of the Ink Landing Position 144
Accurately Adjusting the Misalignment of the Ink Landing Position 146
Reducing Horizontal Bands (Feed Correction Function) 148
Configuring Settings to Match the Properties of the Media 150
Adjusting Print Head Height to Match Media Thickness 150
Using Transparent Media 152
Using Non-resilient Media 153
Using Media That Wrinkles Easily/Does Not Move Smoothly 154
Accurately Adjusting the Cutting Settings 155
Fine-tuning the Cutting Conditions 155
Accurately Adjusting the Cutting-in Amount 157
Making Adjustments When Cutting the Print Surface 159
Performing Distance Correction during Cutting 164
Cutting to Make It Possible to Cut Corners Attractively (Over Cut) 166
Prioritizing the Cutting Settings of This Machine over the Software RIP Settings 167
Accurately Adjusting the Settings for Printing and Cutting 168
Correcting the Misalignment of Printing and Cutting 168
Correcting the Misalignment of the Printing and Cutting Positions during Cutting 172
Accurately Adjusting the Settings for Cutting with Crop Marks 174
Aligning the Positions of Cutting with Crop Marks Manually 174
Correcting the Misalignment of Printing and Cutting with Crop Marks (Concurrent Test for Printing and Cutting with Crop Marks) 176
Correcting the Misalignment of Printing and Cutting with Crop Marks (Separate Test for Printing and Cutting with Crop Marks) 180
Correcting the Sensor for Reading Crop Marks 187
Adjusting the Level of the Sensor for Reading Crop Marks According to the Media 190
Resetting the Level of the Sensor for Reading Crop Marks 191
Avoiding Canceling Due to Cleaning during Printing 192
Cleaning during Printing 192

Optimizing Work Efficiency 195
Using Presets 196
Saving the Current Settings in Presets 196
Loading and Outputting a Preset 198
Adjusting the Output-start Location 199

Setting the Base Point 199
Reducing Output Time 201
Speeding Up Output for Narrow Media 201
Using the Media Take-up Unit 202
About the Media Take-Up Unit 202
Other Useful Functions 203
Performing Printing Tests Arranged Horizontally 203

Optimizing Operation Management 204
Managing the Operations Appropriately and Efficiently 205
Setting the Current Date/Time and Using It for Maintenance 205
Displaying the Amount of Media Remaining 206
Making Sure to Verify the Setting for the Amount Remaining Every Time the Media Is Changed 208
Printing the Amount of Remaining Media 209
Determining What Happens When Ink Runs Out 210
Notifying the User of Ink Exceeding Its Shelf Life 211
Checking the Ink Shelf Life 212
Setting the Activation Interval for Sleep Mode (Power-saving Feature) 213
Deactivating the Sleep Mode (Power-saving Feature) 214
Managing the Basic Settings of the Printer 215
Setting the Menu Language and Units of Measurement 215
Viewing System Information 216
Returning All Settings to Factory Defaults 217

Maintenance 218

Introduction 219
Important Notes on Handling and Use 220
Printer 220
Ink Cartridges 220
Basic Maintenance Knowledge 222
Types and Timing of Maintenance 222
Automatic Maintenance Feature and Notes 223
Measures When the Printer Is Not in Use for a Prolonged Period 224

Regular Maintenance 225
Cleaning the Machine 226
Cleaning the Media Path 226
Cleaning the Cutting Carriage Roller 228
Maintenance That Must Be Performed Daily 229
Maintenance of Ink Cartridges 229
Printing Tests and Normal Cleaning 230
Manual Cleaning 232
Cleaning That Must Be Performed Once a Month or More 243
When UV-LED Device Cleaning Is Necessary 243
How to Clean the UV-LED Devices 244

Disposing of Discharged Fluid 250
Precautions for Disposing of Discharged Fluid 251
If the Discharged Fluid Disposal Message Appears 252

Advanced Maintenance 254
When Normal Cleaning Is Not Effective 255
Medium Cleaning Method 255
Powerful Cleaning Method 257
Manual Cleaning 259
When Manual Cleaning Is Necessary 259
Manual Cleaning Method 260

When Uneven Color Issues Occur with White Ink 272
Ink Circulating Method 272
Light Choke Cleaning Method 273
When Uneven Color Issues Occur with Ink other than White Ink 276
Light Choke Cleaning Method 276
Handling Severe Dot Drop-out, Dot Displacement, and Uneven Colors 279
Ink Renewal Method 279
Partially Restricting the Print Heads Used for Printing 282
Emergency Measure) Cleaning the Print Head Surface 284

Replacing Consumable Parts 286
Replacing Parts for Maintenance 287
Replacing the Wiper 287
Replacing the Felt Wiper 291
Replacing the Blade/Separating Knife 294
Replacing the Blade 294
Replacing the Separating Knife 301
Inquiries for Consumable Parts and Products 304
Items That You Can Purchase and Replace by Yourself 304
Items That Require Inquiries before Replacement 304

Troubleshooting Methods 305

Output Quality Problems 306
Printed results are coarse or contain horizontal stripes 307
Do the print heads cause dot drop-out? 307
Is the print head height appropriate? 307
Have you carried out feed correction? 307
Have you carried out ink landing position correction "MEDIA GAP ADJ."? 307
Is the printer installed in a level and stable location? 307
Is the print mode suitable? 308
Is the media loaded correctly? 308
Are the settings for the "PRESET" menu item appropriate? 308
The media becomes soiled when printed 309
Do the print heads come into contact with the media? 309
Are the print heads dirty? 309
Are the pinch rollers or the media clamps dirty? 309
Colors are unstable or uneven 310
Did you shake the ink cartridges before installing them? 310
Is the media wrinkled? 310
Was printing paused partway through? 310
Was cleaning performed during printing? 310
Is the printer installed in a level and stable location? 310
Is the media loaded correctly? 310
Are the operating parameters set to appropriate values? 311
Are the settings for the "PRESET" menu item appropriate? 311
Are the irradiation windows of the UV-LED devices dirty? 311
Cutting Is Misaligned or Skewed 312
Is the media loaded correctly? 312
Are the settings for the cutting conditions appropriate? 312
Is the length of output too long? 312
Are you using media that exhibits large expansion and contraction? 312
Is the setting for the "CALIBRATION" menu item (under "CUTTING MENU") correct? 312
Are the pinch rollers placed on the proper locations? 313
Printing and Cutting Are Misaligned 314
Have you corrected the misalignment of printing and cutting? 314

Problems in Cutting with Crop Marks 315

Automatic Detection of Crop Marks Fails 316
Is the media wrinkled or warped? 316
Is the media size too large? 316
Are you using media that is likely to reflect light? 316
Are you using transparent media? 316
Printing and Cutting Are Misaligned 317
Have you corrected the misalignment of printing and cutting with crop marks? 317

Media Feed Problems 318
Media Wrinkles or Shrinks 319
Is the media loaded and set up straight and securely? 319
Are the media clamps attached? 319
Is the humidity of the room too high? 319
Is the media sagging? 319
Media Feeding Is Not Straight 320
Is the media loaded and set up straight and securely? 320
Media Feeding Is Not Smooth 321
Is some other object coming into contact with the media? 321
Is the media too thick? 321
Are the grit rollers dirty? 321
A Media Jam Occurs! 322
Is an error message displayed? 322
Is the media warped or wrinkled? 322
Is the height of the print heads too low? 322
Are the grit rollers dirty? 322
Are the media clamps attached? 322
Is the media loaded and set up straight and securely? 322
Is some other object coming into contact with the media? 323
Is the media too thick? 323

Machine Problems 324
The Print Heads Do Not Move 325
What to Do First 325
If the Print Heads Still Do Not Move 325
The printer unit does not run 327
Is the power switched on? 327
Is [SETUP] lit? 327
Are any covers open? 327
Is the top menu displayed? 327
Is [PAUSE] lit? 327
Is a message displayed on the screen? 327
Are the cables connected? 328
Is the LAN routing appropriate? 328
Are the LAN settings correct? 328
Did the software RIP end abnormally? 328
Has the ink run out? 328
Cannot Separate the Media 329
Is the separating knife installed? 329
Is the cut rail installed? 329
Setup Cannot Be Completed 330
Did you perform manual cleaning? 330

Messages on the Operation Panel 331
Messages 332
"1 ■ 2 ■ 3 ■ 4 ■ 5■ 6 ■ 7 ■ 8 ■" 332
"CLOSE THE COVER" 332
"SHEET NOT LOADED SETUP SHEET" 332
"END OF THE SHEET" 332
"EMPTY DRAIN BOTTLE" 332

"LIMIT OVER EMPTY DRAIN BOTTLE" 332
"INSTALL DRAIN BOTTLE" 332
"TIME FOR FELT REPLACE" 333
"HEAD PROTECTION ACTIVATED" 333
"REMOVE MEDIA CLAMPS" 333
"TIME FOR MAINTENANCE" 333
"MAINTENANCE REQIRED" 333
"TIME FOR WIPER REPLACE" 334
Error Messages 335
"ALIGN POINT POSITION INVALID" 335
"INK SHELF LIFE EXPIRE" 335
"CROPMARK ERROR NOT FOUND" 335
"CAN'T PRINT CROP CONTINUE?" 336
"TEMPERATURE IS TOO HIGH **° C" 336
"SERVICE CALL ****" 336
"SHEET TOO SMALL CONTINUE?" 336
"SHEET SET ERROR SET AGAIN" 336
"TEMPERATURE IS TOO LOW **° C" 337
"DATA ERROR CANCELING..." 337
"PINCHROLL ERROR LOWER PINCHROLL" 337
"PINCHROLL ERROR INVALID RIGHT(LEFT) POS" 337
"PINCHROLL ERROR 2ND FROM RIGHT" 337
"WRONG CARTRIDGE 12345678" 337
"AVOIDING DRY-UP TURN POWER OFF" 337
"SET HEAD HEIGHT TO ****" 338
"CANCELED FOR PUMP PROTECTION" 338
"MOTOR ERROR TURN POWER OFF" 338

Appendix 339

Operations When Moving the Unit 340
Preparing to Move the Machine 341
Step 1: Removing Media and the Blade Holder 341
Step 2: Circulating the Ink (Only When Using White Ink) 343
Step 3: Removing the Ink That Has Collected below the Wiper 344
Step 4: Discarding the Discharged Fluid 346
Step 5: Secure the print heads in place using the retainer. 347
Step 6: Reinstalling the Machine 348

Main Specifications 349
Printing/Cutting Area 350
Maximum Area 350
Maximum Printing Area When Using Crop Marks 351
Media Separation Location during Continuous Printing 352
About the Blade 353

Memo 354
About this Manual 355

Basic Handling Methods

Basic Information

Part Names and Functions 9
- Printer Unit 9
- Operation Panel 14
- Display Screen 15

About the Media Used 16
- Types of Media 16
- Conditions for Usable Media 17

Menu List 18
- Main Menu 18
- Function Menu 22
- Language and Unit Menu 23

Part Names and Functions

Printer Unit

Front

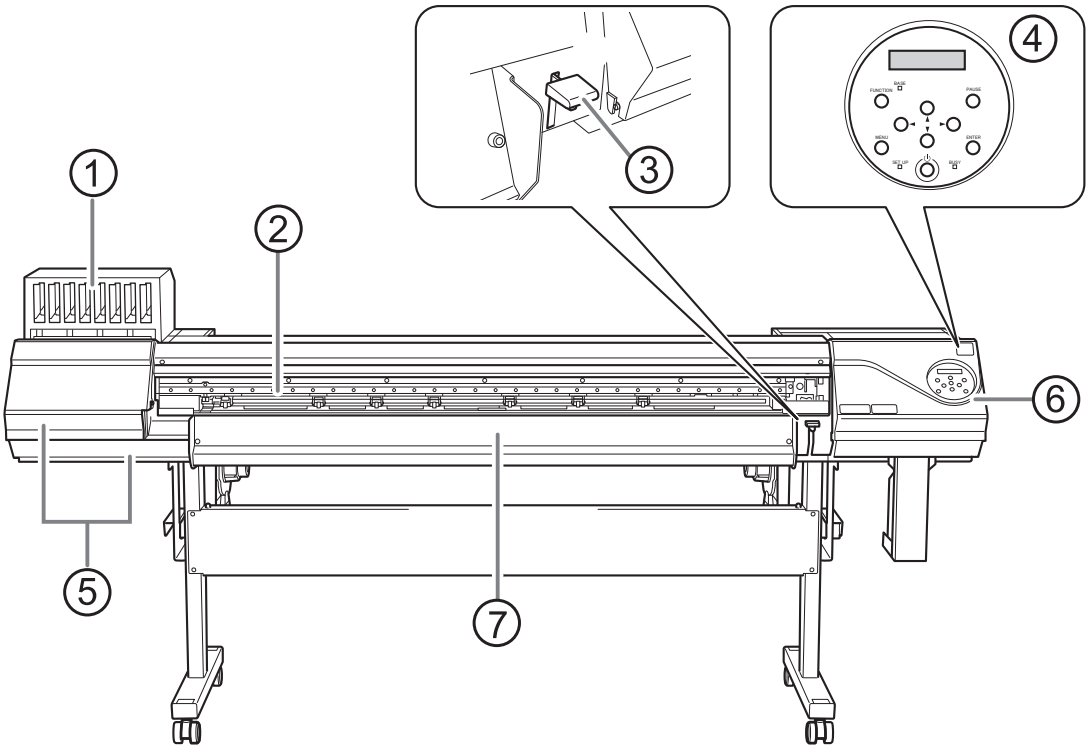

No.	Name	Function overview
①	Cartridge slots	The location where ink cartridges are installed.
②	Front cover	Open this when necessary, such as when loading media. In all other situations, keep the front cover closed.
③	Loading lever (front)	Operate this when you load media.
④	Operation panel	The panel containing the buttons used to operate the machine. P. 14Operation Panel
⑤	Left cover (top) and left cover (bottom)	Open these when you perform maintenance.
⑥	Right cover	Open this when you perform maintenance.
⑦	Front UV shield	Blocks the light from the UV lamp.

Rear

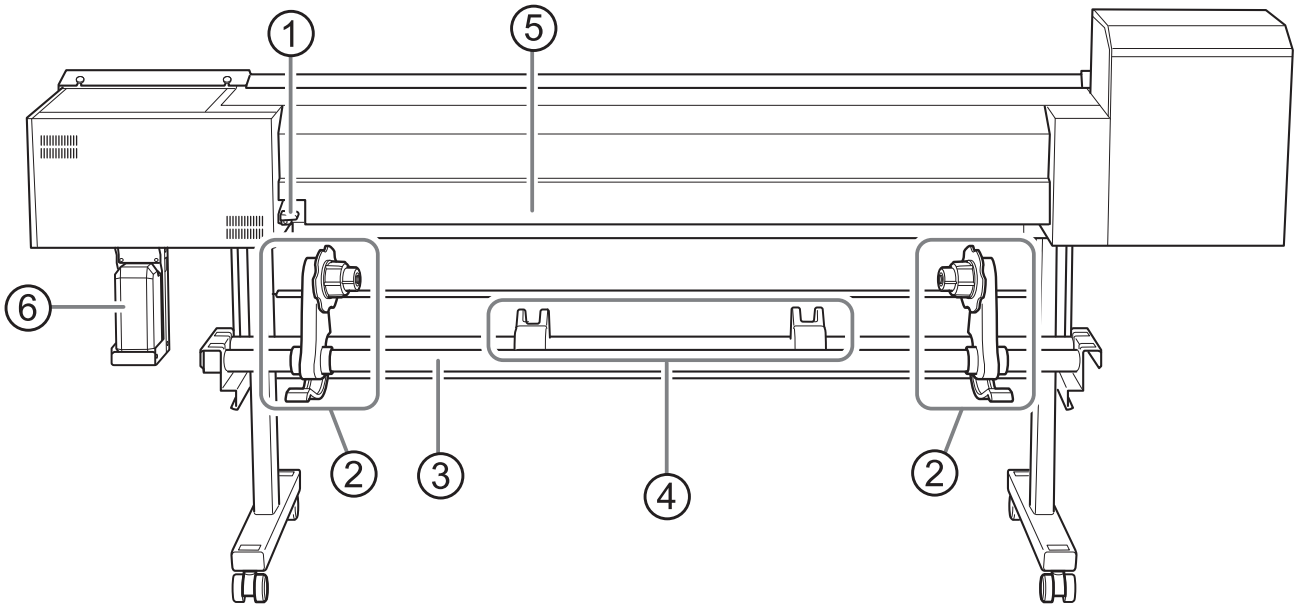

No.	Name	Function overview
①	Loading lever (rear)	Operate this when you load media.
②	Media holders	Use these when you load media.
③	Shaft	
④	Media stays	
⑤	Rear UV shield	Blocks the light from the UV lamp. If it is difficult to load the media, open the UV shield, but close it when you are finished loading the media. Printing is not possible with the UV shield open.
⑥	Drain bottle	Discharged fluid is stored in this bottle. When discharged fluid is nearly overflowing from the bottle, an error is displayed and printing is not possible.

Side

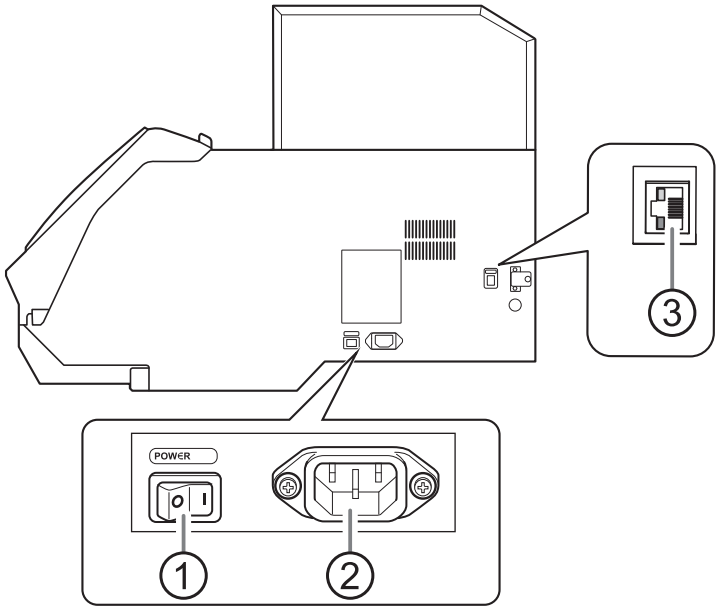

No.	Name	Function overview
①	Main power switch	Switch the main power on/off.
②	Power-cord connector	Use this to connect the power cable.
③	Ethernet connector	Use this to connect an Ethernet cable.

Front Cover Interior/Print Head Area

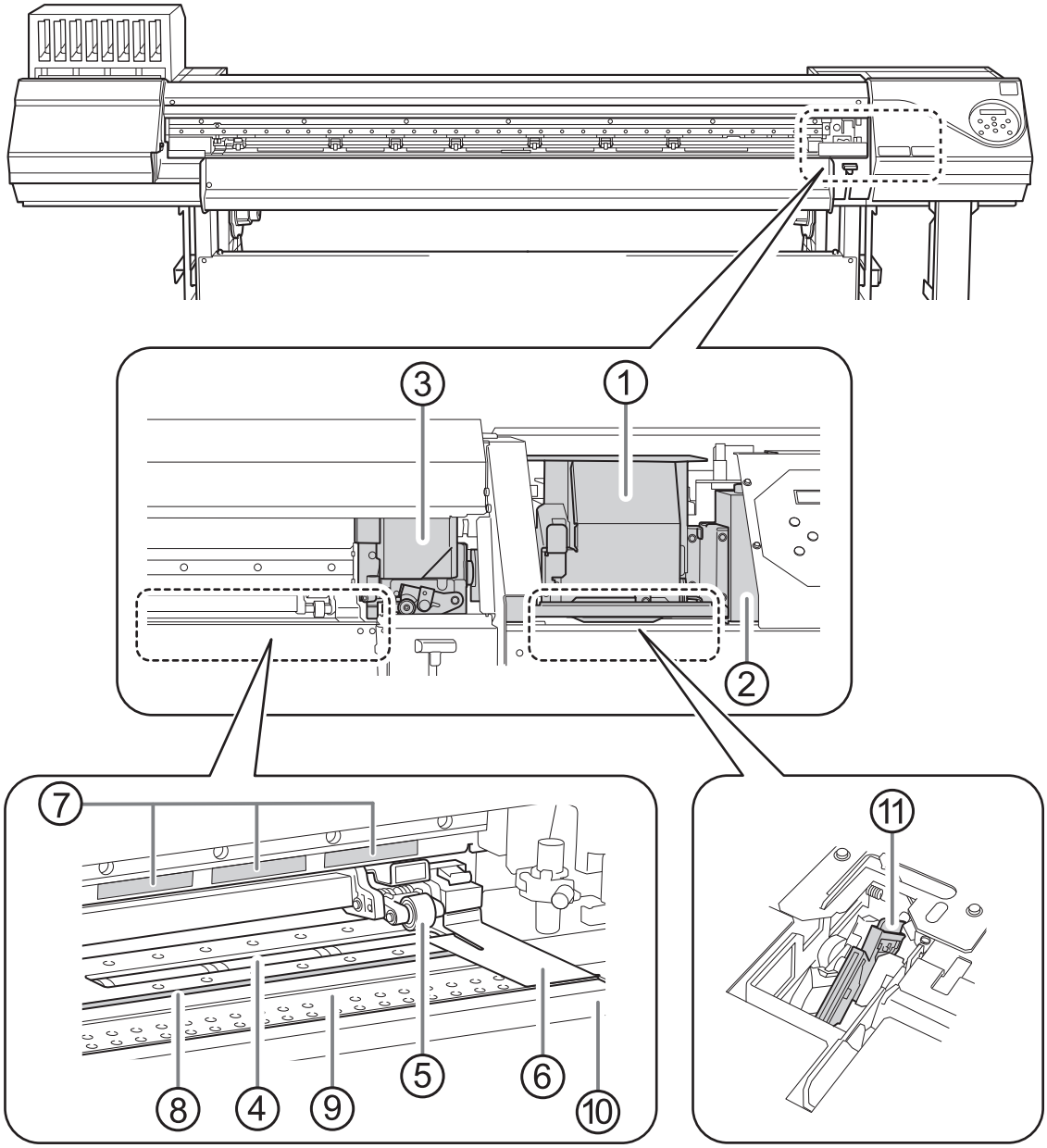

No.	Name	Function overview
①	Print-head carriage	The print heads are inside here.
②	UV-LED device	Shines the UV light used to cure the ink.
③	Cutting carriage	The blade and the separating knife are inside here.
④	Grit roller	This is one of these rollers that feed the media.
⑤	Pinch roller (left pinch roller, right pinch roller, and middle pinch roller)	These clamp the media when the loading lever is lowered. These rollers are called the left pinch roller, the right pinch roller, and the middle pinch roller according to their positions. Blue stickers are affixed to the left and right pinch rollers.
⑥	Media clamp	This clamps the edge of the media to keep it from coming loose. It also prevents fuzz on the cut edge of the media from touching the print heads.

No.	Name	Function overview
⑦	Grit patterns	This indicates the location of a grit roller. When loading media, be sure to place the pinch rollers within the ranges indicated by these patterns.
⑧	Blade protector	This is the path that the blade takes during cutting. It protects the tip of the blade.
⑨	Platen	This is the path over which the media passes. A suction fan that keeps the media from coming loose is built in.
⑩	Apron	Smoothly conveys the media that is being transported.
⑪	Wiper	Cleans the print heads during automatic cleaning and in similar situations.

If a Cover Opens during Operation

If the front cover, left cover, right cover, or rear UV shield (hereinafter these items are all referred to as the "cover") opens during an output operation, the machine makes an emergency stop. When an emergency stop occurs, a message prompting you to close the cover appears on the screen. Close the covers as directed in the instructions shown on the screen.

When the cover is closed, you will be able to continue the operation.

If you cannot continue the operation even after you close the cover, a nonrecoverable error may have occurred.

RELATED LINKS

- P. 335Error Messages

Operation Panel

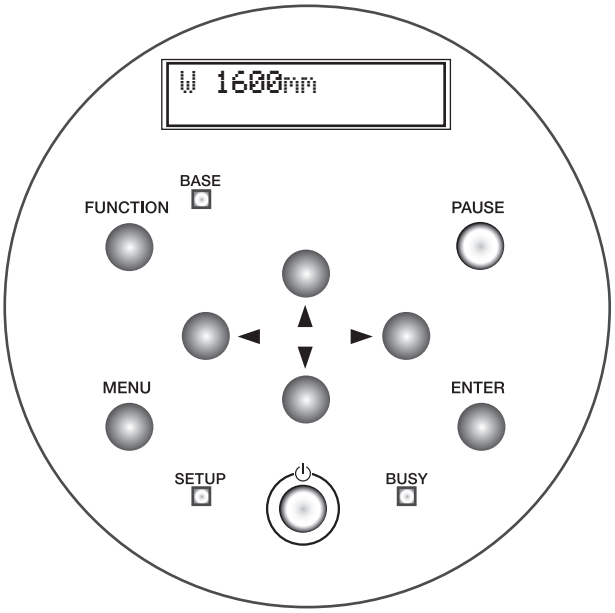

Part	Name	Details	Notation in this manual
	Display screen	This displays various setting menus and other information.	
	Sub power switch	This switches the printer on and off. (To switch the printer off, hold down the switch for one second or longer). The light flashes slowly when the machine is in sleep mode.	
	ENTER key	Use this for such tasks as enabling setting values.	[ENTER]
	MENU key	Press this to enter the menus for various settings.	[MENU]
	FUNCTION key	You press this when entering the setting menu for cleaning of the print heads, printing tests, and so on.	[FUNCTION]
	PAUSE key	This pauses the printing operation. It lights when operation is paused.	[PAUSE]
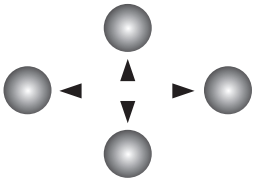	Cursor keys	Use these to select settings for menu items, to move the media, and for other such operations.	[◀][▼][▲][▶]
	BUSY light	This lamp lights up during printing and other such operations.	[BUSY]
	SETUP light	This lights when media has been loaded correctly.	[SETUP]
	BASE POINT light	This lights when the base point (the output-start location) has been set.	[BASE]

Display Screen

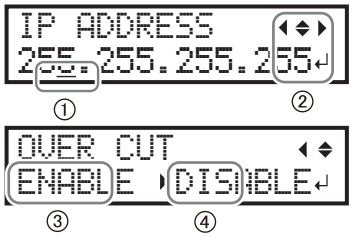

①	Cursor		Displays the setting to be changed. You can move it with the cursor keys.
②	Direction mark	◀ ▲ ▼ ▶	You can select settings and switch screens by pressing the cursor keys indicating directions.
	ENTER mark	↵	Press [ENTER] to set the selected setting or execute the processing.
③	Present value		The present value (before change) is displayed.
④	Setting value		Select the setting you want to set (after change).

About the Media Used

Types of Media

In this manual, the paper used for output is called "media." The two main types of media used in this machine are shown below.

- Roll media: Media wound onto a paper tube
- Sheet media: Media not wound onto a paper tube such as standard-size media

Various paper types of roll media and sheet media are selectable according to your purpose. For detailed information about each media, contact your media supplier.

Conditions for Usable Media

This machine cannot print on every kind of media. When selecting media, be sure to carry out testing in advance to make sure that satisfactory printing results are obtained.

Size

	64-inch model	30-inch model
Width *1	210 to 1,625 mm (8.3 to 64 in.)	182 to 762 mm (7.2 to 30 in.)
Cuttable media thickness*1	0.08 to 0.22 mm (3.2 to 8.6 mil; depends on the material of the media)	
Maximum media thickness (including backing paper)*1	When performing printing only: 1.0 mm (39.4 mil) When performing cutting: 0.4 mm (15 mil)	
Maximum roll outer diameter	210 mm (8.2 in.)	
Paper tube (core) inner diameter	76.2 mm (3 in.) or 50.8 mm (2 in.)	

*1 Applies to both roll and sheet media

Maximum Roll Weight

- 64-inch model: 40 kg (88 lb.)
- 30-inch model: 25 kg (55 lb.)

MEMO

If using the take-up unit, this specification depends on the conditions of the take-up unit.

Other Conditions

Media such as the following cannot be used.

- Media whose end is attached to the paper tube (core)
- Media that is severely warped or that has a strong tendency to reroll
- Media whose paper tube (core) is bent or crushed
- Media that bends under its own weight when loaded
- Media on a sagging roll
- Media that is rolled unevenly

Menu List

Main Menu

Press [MENU].

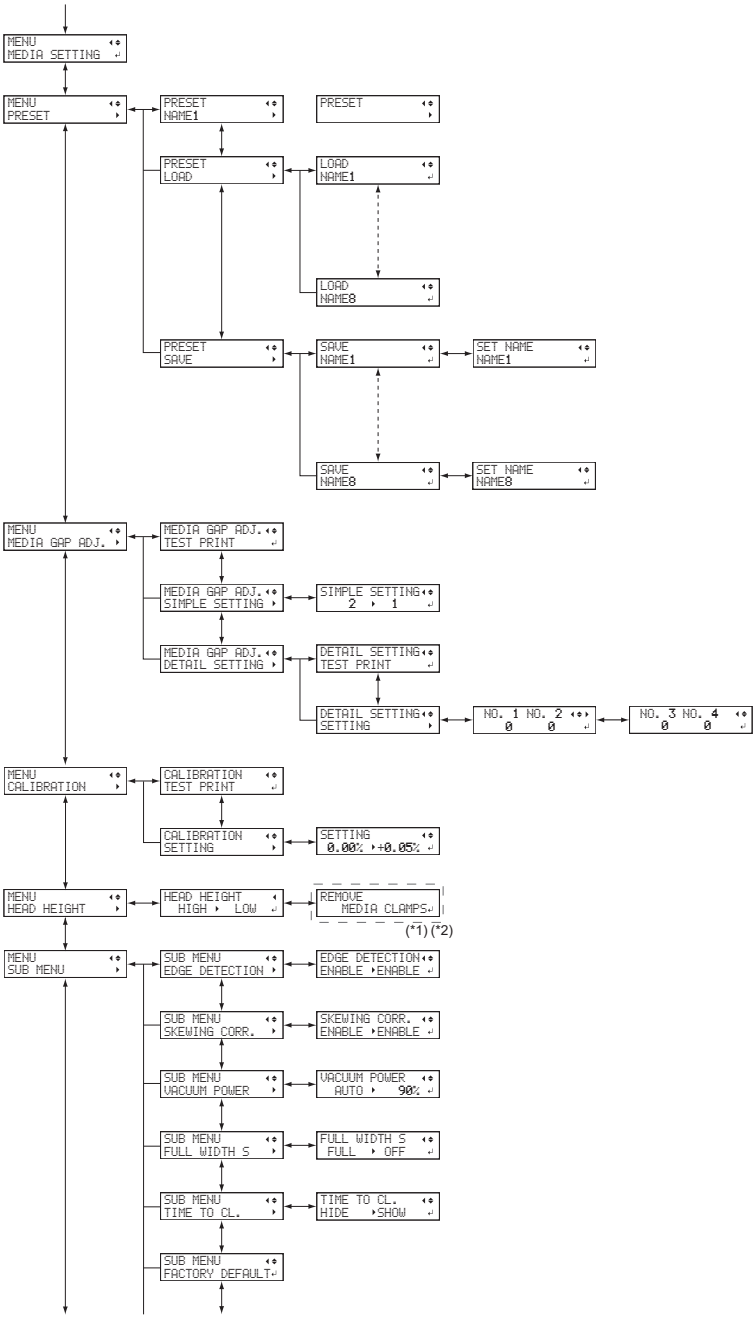

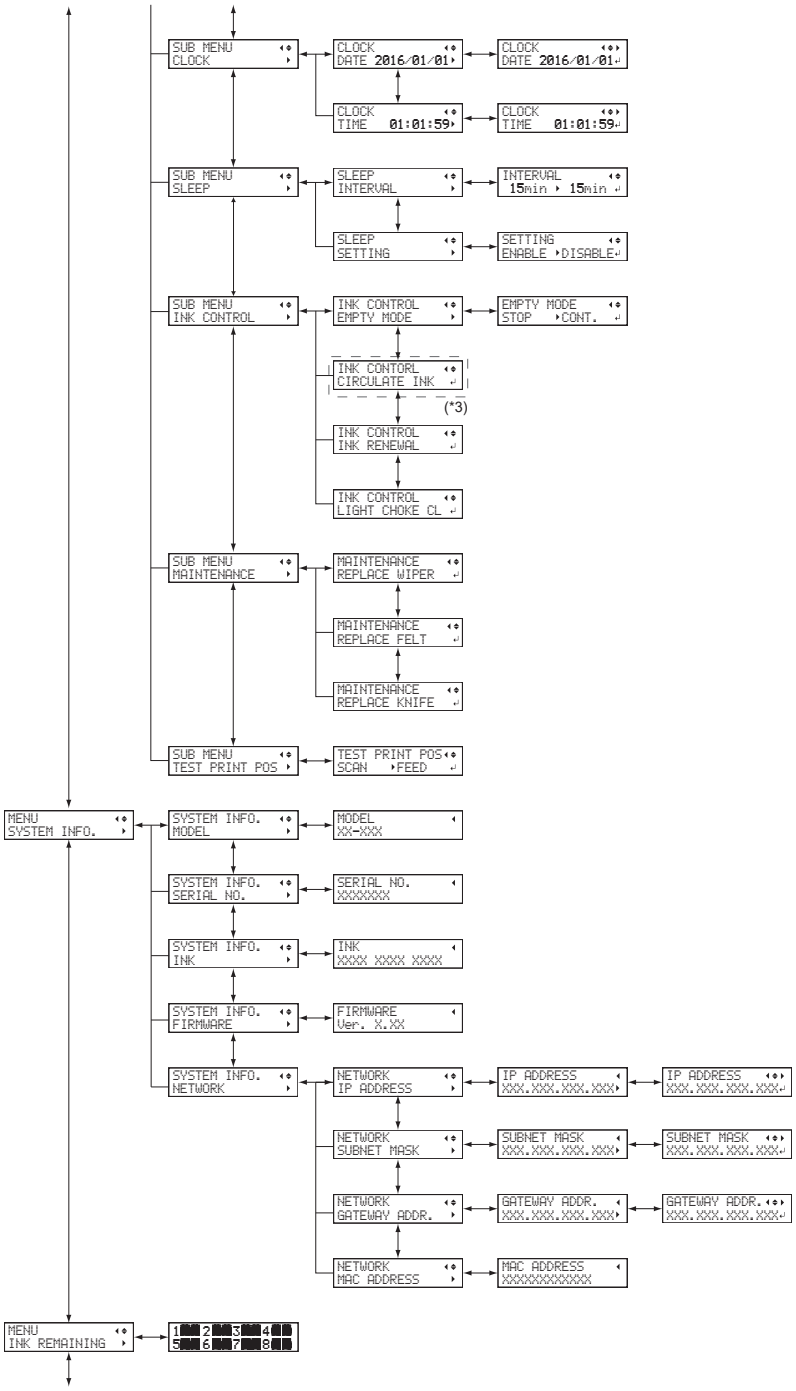
SUB MENU
CLOCK
CLOCK
DATE 2016/01/01
CLOCK
TIME 01:01:59
CLOCK
DATE 2016/01/01
CLOCK
TIME 01:01:59
SUB MENU
SLEEP
SLEEP
INTERVAL
INTERVAL
15min 15min
SLEEP
SETTING
SETTING
ENABLE DISABLE
SUB MENU
INK CONTROL
INK CONTROL
EMPTY MODE
EMPTY MODE
STOP CONT.
INK CONTORL
CIRCULATE INK
(*3)
INK CONTROL
INK RENEWAL
INK CONTROL
LIGHT CHOKE CL
SUB MENU
MAINTENANCE
MAINTENANCE
REPLACE WIPER
MAINTENANCE
REPLACE FELT
MAINTENANCE
REPLACE KNIFE
SUB MENU
TEST PRINT POS
TEST PRINT POS
SCAN FEED
MENU
SYSTEM INFO.
SYSTEM INFO.
MODEL
MODEL
XX-XXX
SYSTEM INFO.
SERIAL NO.
SERIAL NO.
XXXXXXX
SYSTEM INFO.
INK
INK
XXXX XXXX XXXX
SYSTEM INFO.
FIRMWARE
FIRMWARE
Ver. X.XX
SYSTEM INFO.
NETWORK
NETWORK
IP ADDRESS
IP ADDRESS
XXX.XXX.XXX.XXX
IP ADDRESS
XXX.XXX.XXX.XXX
NETWORK
SUBNET MASK
SUBNET MASK
XXX.XXX.XXX.XXX
SUBNET MASK
XXX.XXX.XXX.XXX
NETWORK
GATEWAY ADDR.
GATEWAY ADDR.
XXX.XXX.XXX.XXX
GATEWAY ADDR.
XXX.XXX.XXX.XXX
NETWORK
MAC ADDRESS
MAC ADDRESS
XXXXXXXXXXXX
MENU
INK REMAINING
1 2 3 4
5 6 7 8

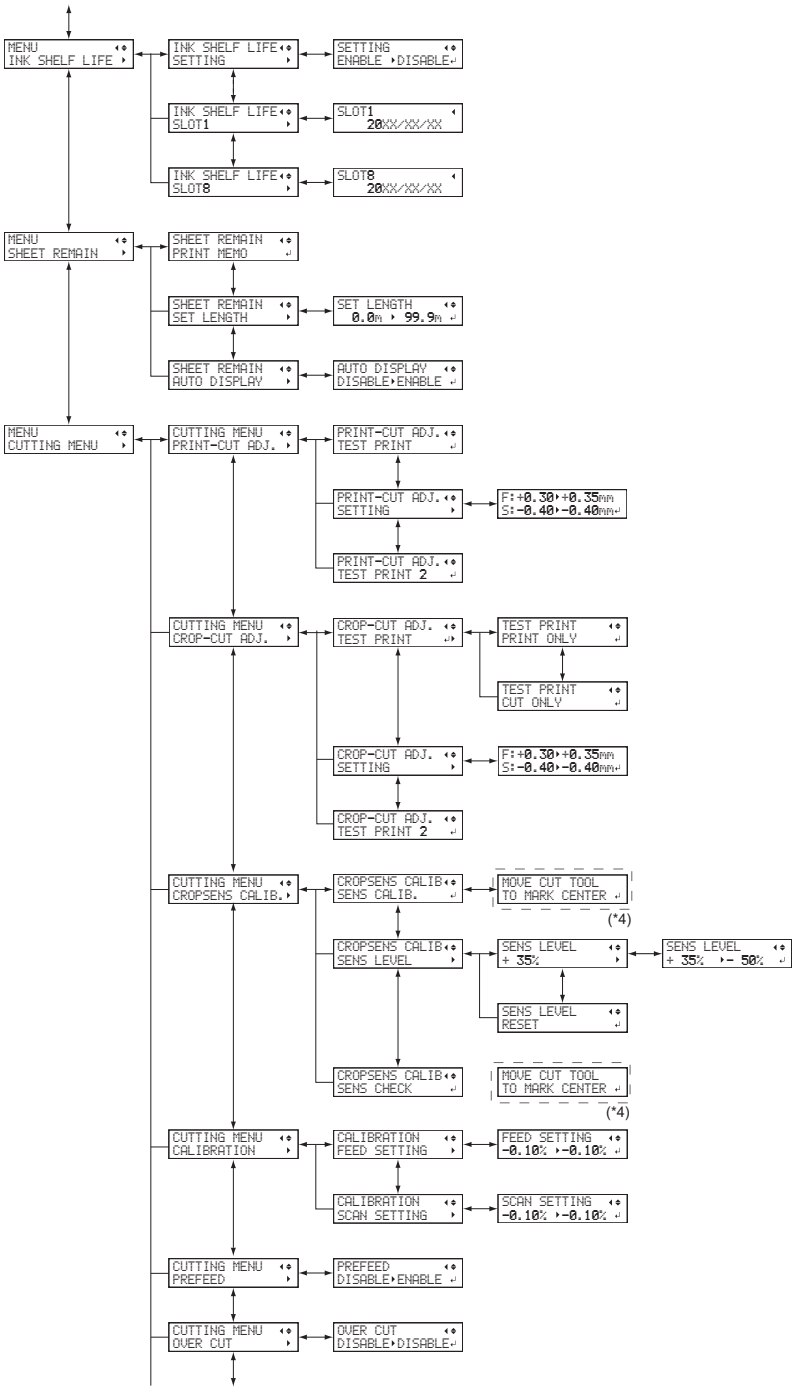
MENU
INK SHELF LIFE
INK SHELF LIFE
SETTING
SETTING
ENABLE ▸DISABLE
INK SHELF LIFE
SLOT1
SLOT1
20XX/XX/XX
INK SHELF LIFE
SLOT8
SLOT8
20XX/XX/XX
MENU
SHEET REMAIN
SHEET REMAIN
PRINT MEMO
SHEET REMAIN
SET LENGTH
SET LENGTH
0.0m ▸ 99.9m
SHEET REMAIN
AUTO DISPLAY
AUTO DISPLAY
DISABLE▸ENABLE
MENU
CUTTING MENU
CUTTING MENU
PRINT-CUT ADJ.
PRINT-CUT ADJ.
TEST PRINT
PRINT-CUT ADJ.
SETTING
F:+0.30▸+0.35mm
S:-0.40▸-0.40mm
PRINT-CUT ADJ.
TEST PRINT 2
CUTTING MENU
CROP-CUT ADJ.
CROP-CUT ADJ.
TEST PRINT
TEST PRINT
PRINT ONLY
TEST PRINT
CUT ONLY
CROP-CUT ADJ.
SETTING
F:+0.30▸+0.35mm
S:-0.40▸-0.40mm
CROP-CUT ADJ.
TEST PRINT 2
CUTTING MENU
CROPSENS CALIB.
CROPSENS CALIB
SENS CALIB.
MOVE CUT TOOL
TO MARK CENTER
(*4)
CROPSENS CALIB
SENS LEVEL
SENS LEVEL
+ 35%
SENS LEVEL
+ 35% ▸- 50%
SENS LEVEL
RESET
CROPSENS CALIB
SENS CHECK
MOVE CUT TOOL
TO MARK CENTER
(*4)
CUTTING MENU
CALIBRATION
CALIBRATION
FEED SETTING
FEED SETTING
-0.10% ▸-0.10%
CALIBRATION
SCAN SETTING
SCAN SETTING
-0.10% ▸-0.10%
CUTTING MENU
PREFEED
PREFEED
DISABLE▸ENABLE
CUTTING MENU
OVER CUT
OVER CUT
DISABLE▸DISABLE

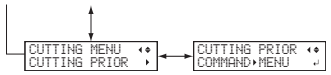

(*1) This is only displayed when the head height is set to "SpLOW".

(*2) This is displayed when the width of the media is displayed and the media clamps are attached after the media has been set up.

(*3) This is displayed when the ink type includes white.

(*4) This is displayed when the width of the media is displayed after the media has been set up.

Function Menu

Press [FUNCTION].

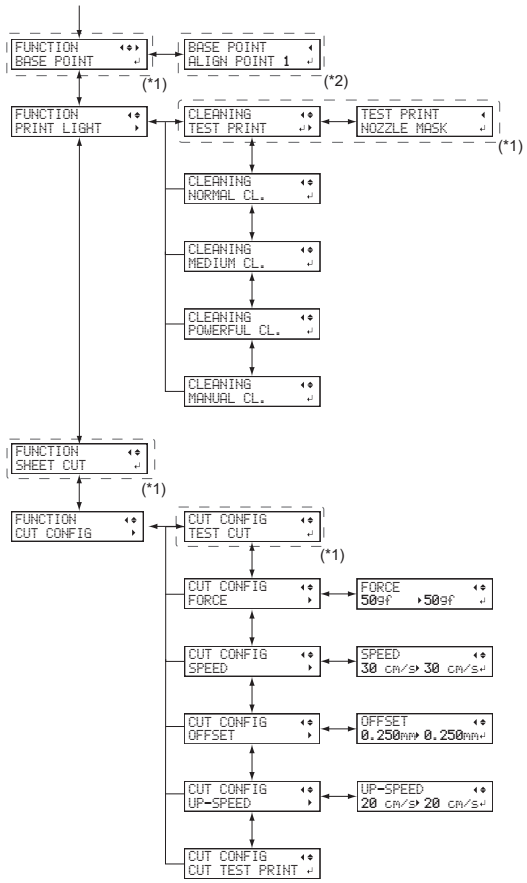

(*1) This is displayed when the width of the media is displayed after the media has been loaded.

(*2) This is not displayed when the base point is not set.

Language and Unit Menu

Hold down [MENU] and switch on the sub power.

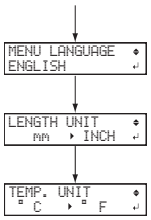

Basic Operations

Power Supply Operations 25
- Turning the Power On 25
- Turning the Power Off 27
- Precautions When Operating the Power Supply 28
- Sleep Mode (Power-saving Feature) 29

Setup of Media 30
- Setup of Roll Media 30
- Setup of Sheet Media 49
- Separating the Media 62

What to Do First after Installation 63
- Accurately Adjusting the Misalignment of the Ink Landing Position 63

Checking before Output 65
- LAN (Local Area Network) Settings 65
- Preventing Sedimentation in Inks 65

Pausing and Canceling Output 66
- Pausing and Resuming Output 66
- Canceling Output 66

Replacing Ink Cartridges 67
- Out-of-ink Warnings 67
- Preventing Sedimentation in Inks 67

Power Supply Operations

Turning the Power On

⚠ WARNING

Remove any loaded media or switch off the sub power when printing is not being performed.

The continued application of heat at a single location may cause the release of toxic gases from the media or pose a fire hazard.

Procedure

1. **Close the front cover.**

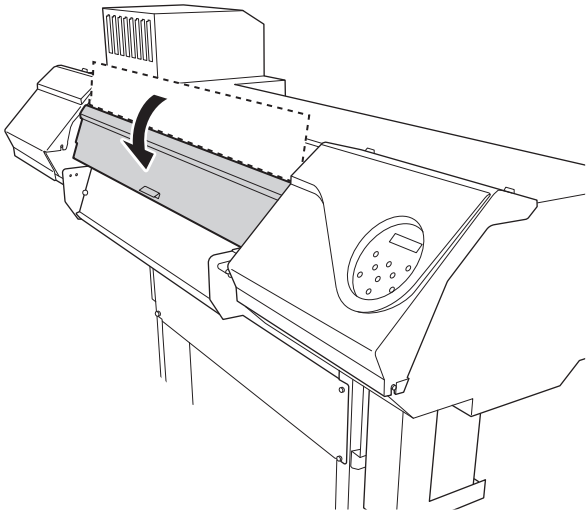

2. **Turn on the main power switch.**

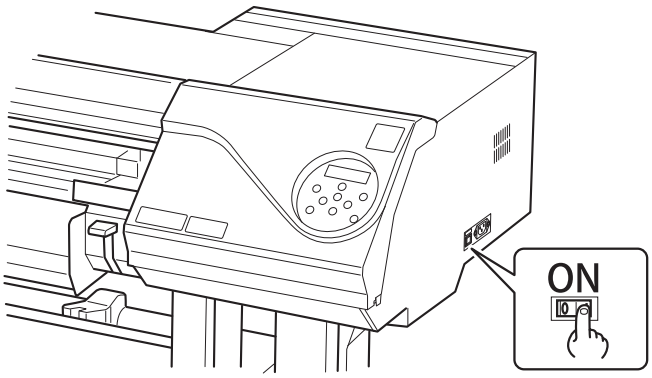

3. **Press the sub power button.**

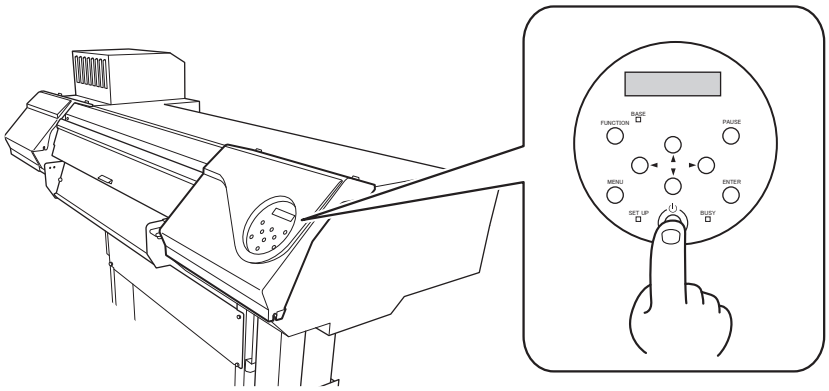
BASE
FUNCTION
PAUSE
MENU
ENTER
SET UP
BUSY

Turning the Power Off

⚠ WARNING

Remove any loaded media or switch off the sub power when printing is not being performed.

The continued application of heat at a single location may cause the release of toxic gases from the media or pose a fire hazard.

Procedure

1. **Switch off the sub power whenever printing is finished.**

   Hold down the sub power switch for 1 second or longer.

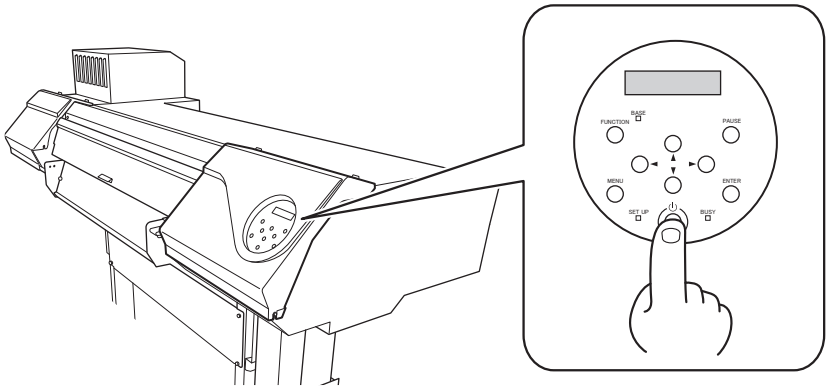

2. **Raise the loading lever and remove the media.**

   When not using the machine, raise the loading lever even if the sub power is on.

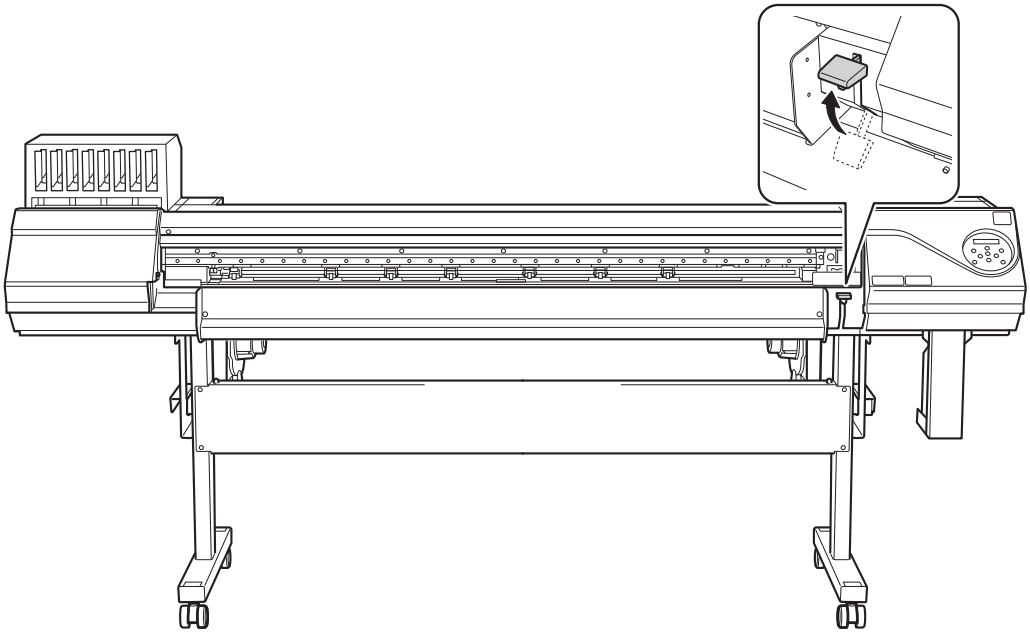

Precautions When Operating the Power Supply

IMPORTANT

Always keep the main power switched on.

Never switch off the main power. Leaving the main power enables automatic maintenance to be carried out periodically. If the automatic maintenance is not carried out, it may result in the breakdown of this machine, such as the breakdown of the print heads.

Never switch off the main power or unplug the power cord suddenly while operation is in progress.

Switching off the main power or unplugging the power cord suddenly while operation is in progress may damage the print heads. Be sure to first switch off the sub power. If the main power is accidentally switched off, immediately turn the main power and sub power back on.

Sleep Mode (Power-saving Feature)

This machine is provided with a power-saving feature that switches to a low-power "sleep mode" when a fixed interval passes with no operation. The factory default for the time after which the machine switches to sleep mode is 30 minutes. When the machine is in the sleep mode, the sub power switch flashes slowly. Using the operation panel or performing operations such as sending print data from the computer restores the machine to its normal mode.

This sleep mode setting can be changed. However, we recommend setting the activation time for sleep mode to 30 minutes or less to reduce power consumption and prevent problems such as overheating.

RELATED LINKS

- P. 213Setting the Activation Interval for Sleep Mode (Power-saving Feature)

Setup of Media

Setup of Roll Media

Load the roll media on the printer. When you have finished loading the media, [SETUP] lights. This work is referred to as "Setup of Media."

⚠ CAUTION

Load the roll media correctly.
Otherwise the media may fall and cause injury.

⚠ CAUTION

The roll media is approximately 40 kg (88.2 lb.) (30-inch model: 25 kg [55.1 lb.]).
To avoid injury, handle the roll media with care.

⚠ CAUTION

Never load media that weighs over 40 kg (88.2 lb.) (30-inch model: 25 kg [55.1 lb.]).
The machine may fail to withstand the weight and tip over or cause the media to fall.

1. Install the media on the media holders.

⚠ WARNING

Handling roll media is an operation that must be performed by 2 persons or more, and care must be taken to prevent falls.
Attempting to lift heavy media in a manner that taxes your strength may cause physical injury. Also, if dropped, such items may cause injury.

MEMO

The media holders of this machine are designed to be used with a paper tube (core) with an inner diameter of 2 inches or 3 inches.

Procedure

1. **Open the front cover.**
2. **When the print head height is "LOW" or "HIGH", move the media clamps to the outside of the grit rollers on the left and right edges respectively.**

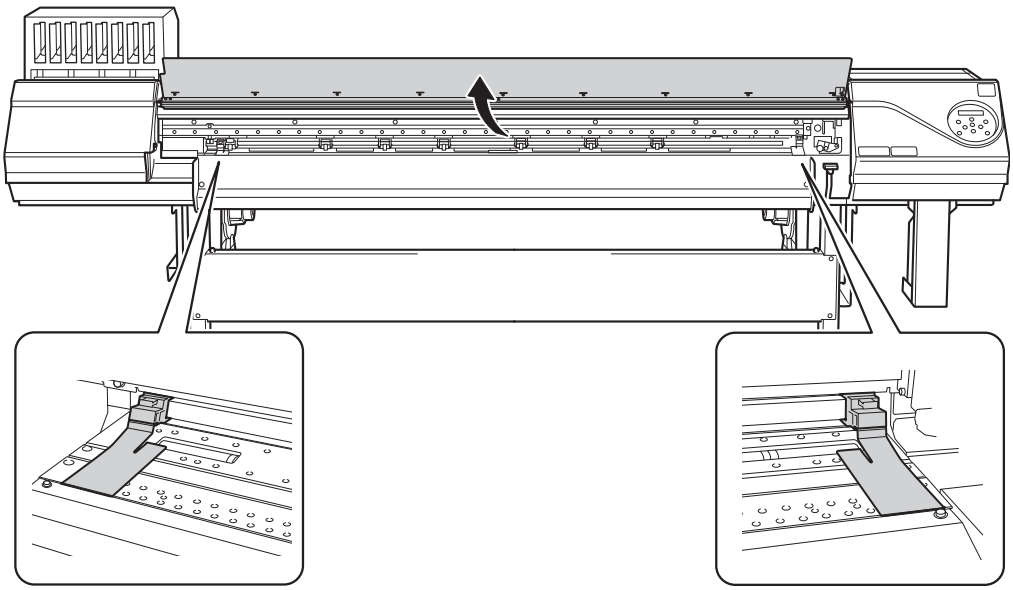

3. **When the print head height is "SpLOW", remove the media clamps.**

The media clamps must be removed to perform setup.

4. **Move to the rear of the printer and open the rear UV shield.**

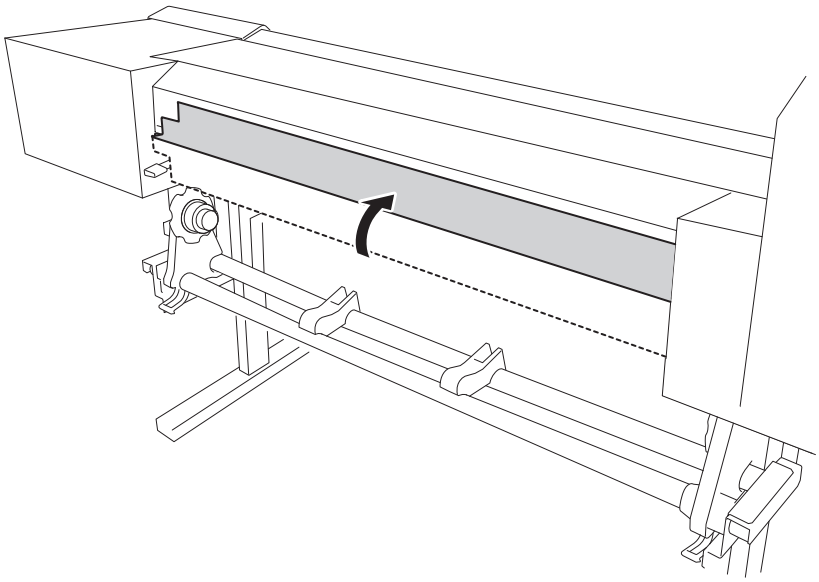

5. **Release the locking mechanisms of the media holders, and then draw them to the left and right ends respectively.**

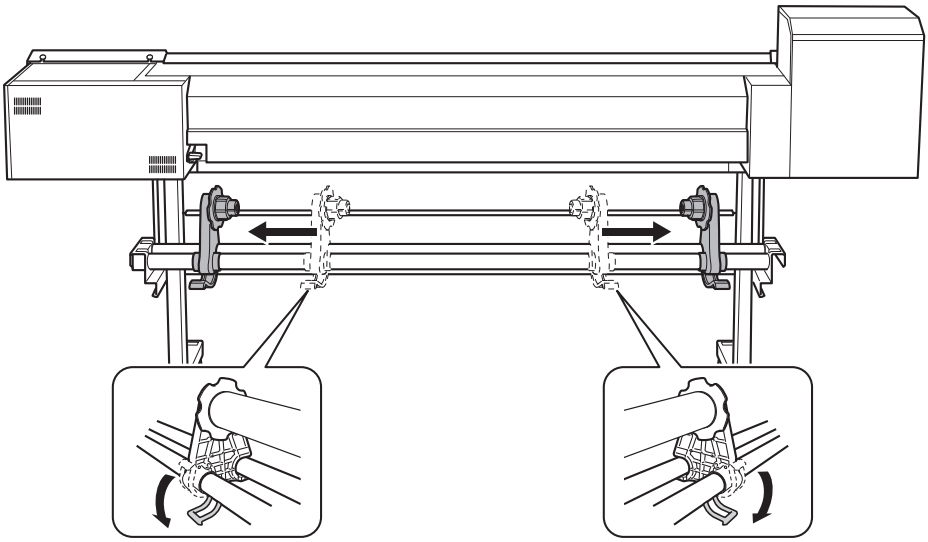

6. **Place the media on the media stays.**

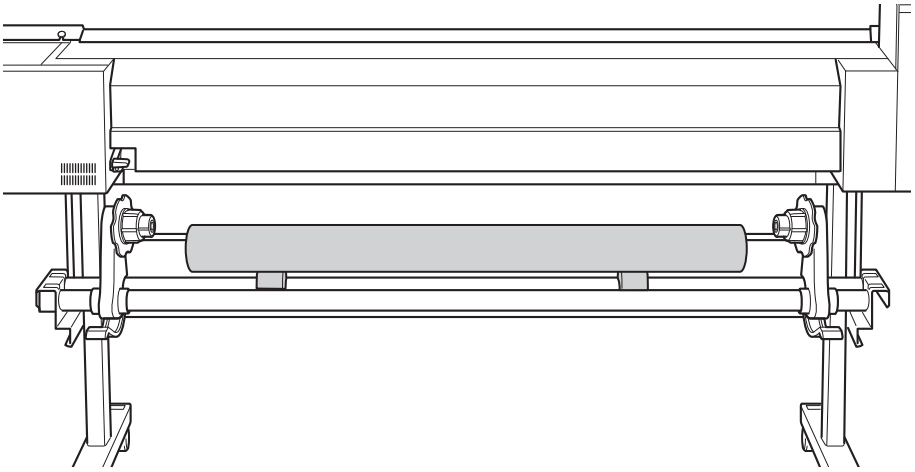

MEMO

Place the media stays at positions that are 1/4 the length of the media from each end of the media.

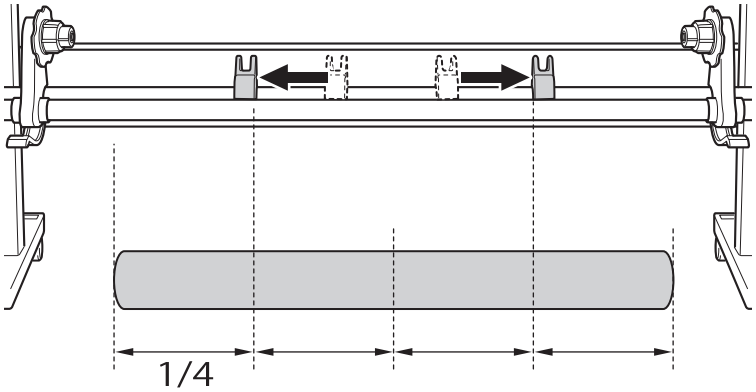

IMPORTANT

Do not leave media on the media stays for a long period of time. The media may become deformed.

7. **Fit the paper tube (core) of the media onto the end cap of the left media holder.**

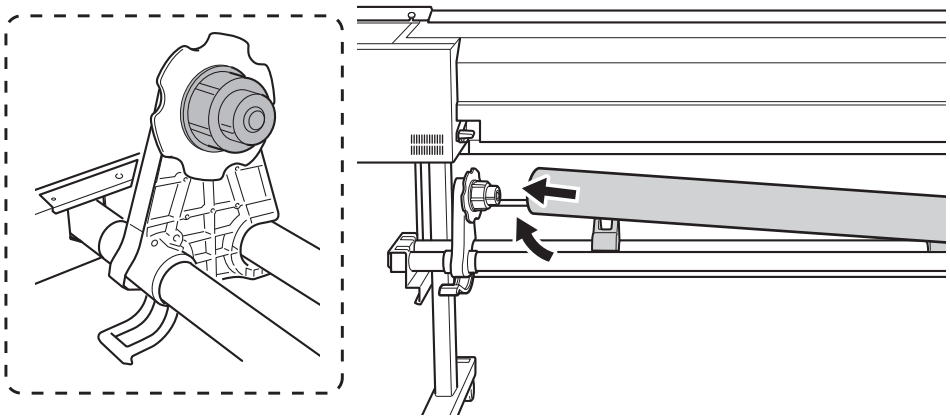

8. **Move the right media holder to fit its end cap onto the paper tube (core) of the media.**

Fit the paper tube onto the media holders securely to prevent the media from moving easily.

IMPORTANT

Do not secure the media holders in place just yet.

In the following procedure, you will adjust the positions of the media holders before securing them in place. Do not secure them in place just yet.

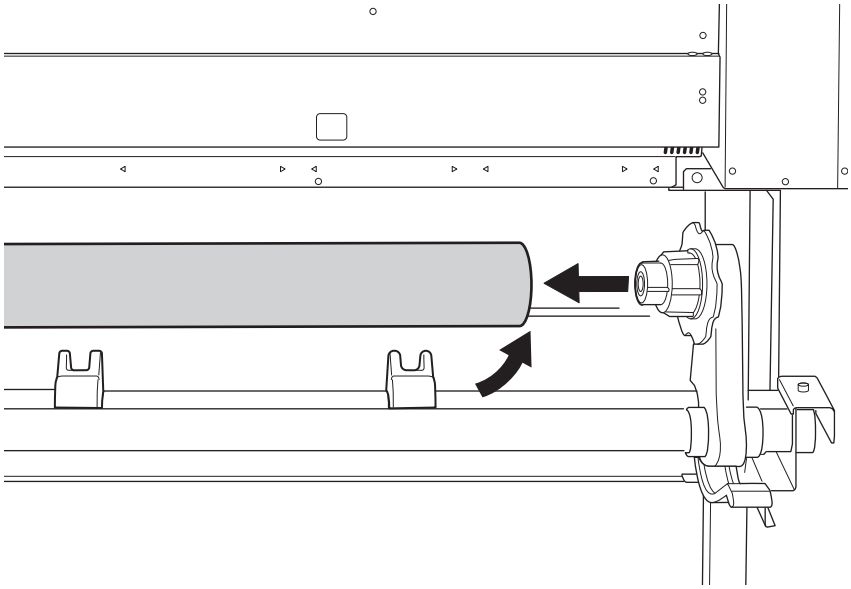

The next operation to perform varies depending on the media type and settings. Proceed as shown below.

- For general media: 2. A: Determine the positions of the media.(P. 34)
- For transparent media or if "EDGE DETECTION" or "SKEWING CORR" is set to "DISABLE": 2. B: Determine the positions of the media.(P. 40)

2. A: Determine the positions of the media.

This section describes how to use the suction fan to prevent media skewing. When using transparent media, whose edges cannot be detected, and when "EDGE DETECTION" or "SKEWING CORR" is set to "DISABLE", the suction fan does not activate automatically, so media cannot be loaded with this procedure. In these cases, refer to 2. B: Determine the positions of the media.(P. 40).

Procedure

1. **Determine the left and right positions of the media with the grit patterns used as the reference.**

   Note the following points when determining the positions.

   - Hold the media holders from the outside and move them.
   - Ensure that the left edge of the media is positioned so that it is within the range of the grit pattern of the left edge.
   - Ensure that the right edge of the media is positioned so that it is within the range of one of the grit patterns.

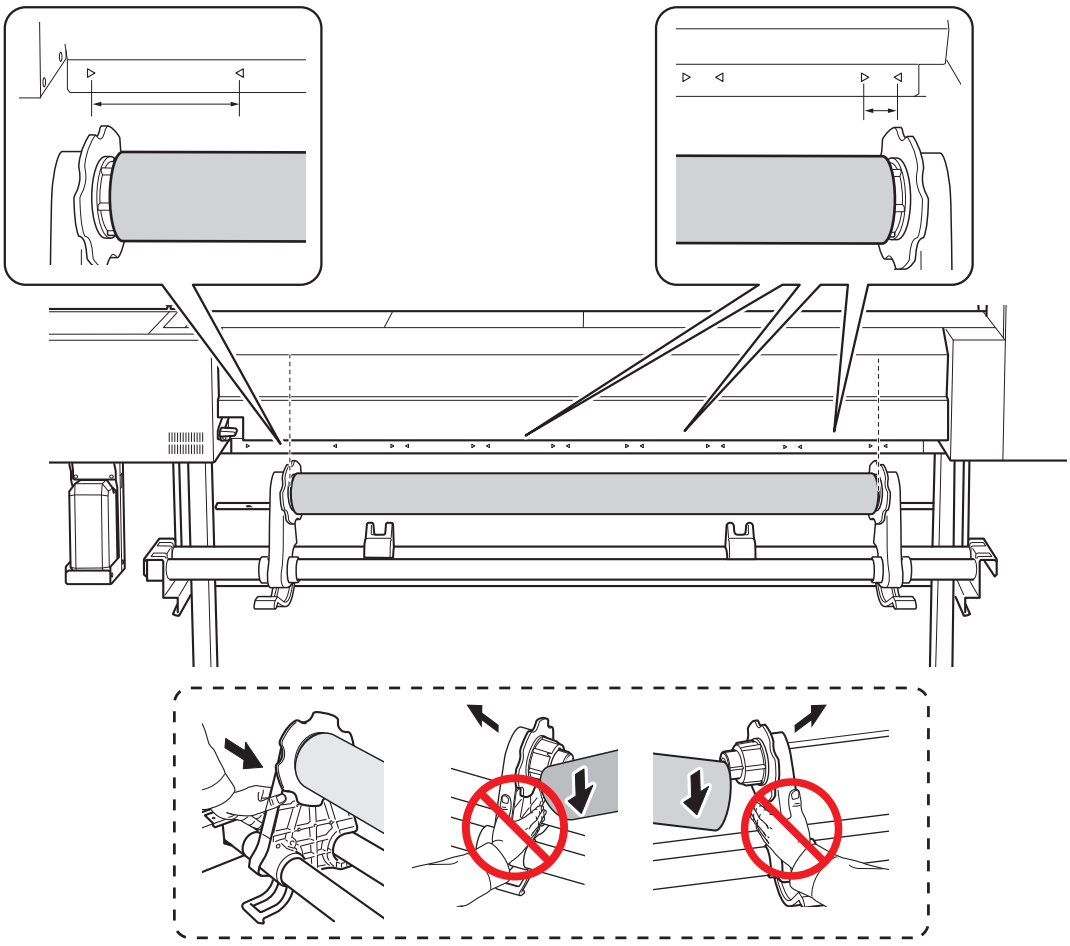

⚠ CAUTION

Do not hold places other than those instructed. Do not move the media by holding it directly.

Otherwise the media may fall off the media holder and cause injury.

2. **Secure the media holders.**

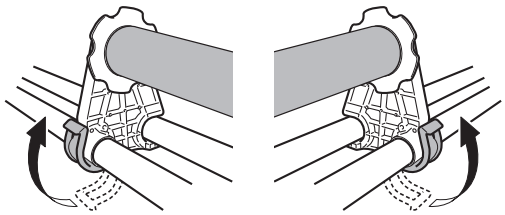

3. **Use the following procedure to load the media.**

Doing so will prevent media skewing.

(1) **Pass the leading edge of the media between the pinch rollers (①) and the grit rollers (②).**

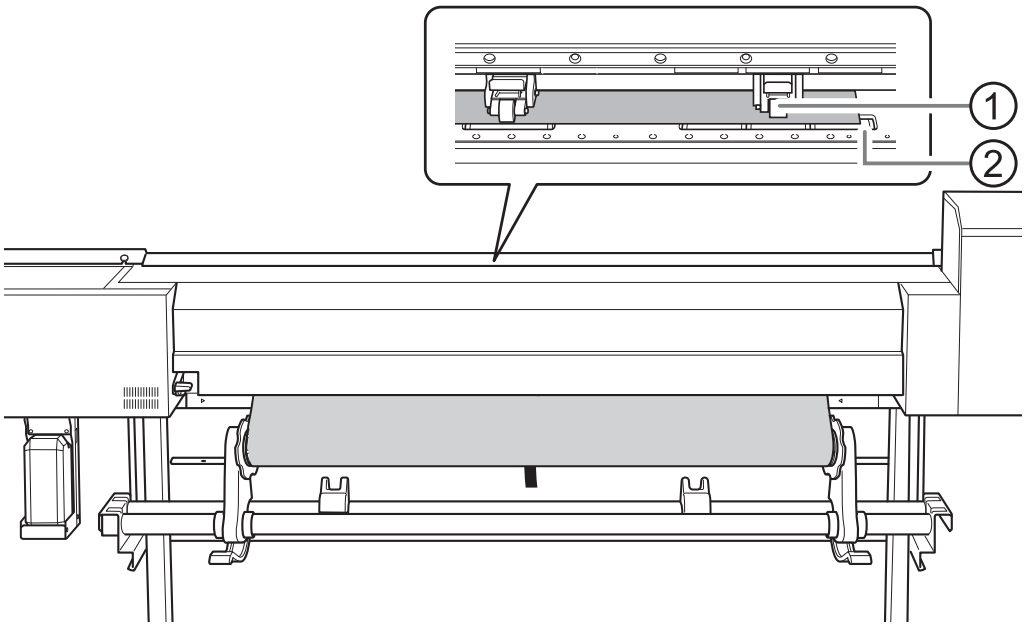

(2) **Feed the media until you hear a beep, and then additionally feed approximately 20 cm (7.87 in.) of the media.**

You will hear a beep. Approximately 5 seconds later, you will hear two beeps, and then the suction fan will activate. While this fan is operating, the position of the media will be maintained even if you remove your hands from it.

(3) **Hold the media holder flange, turning it in the take-up direction to eliminate the slack in the media.**

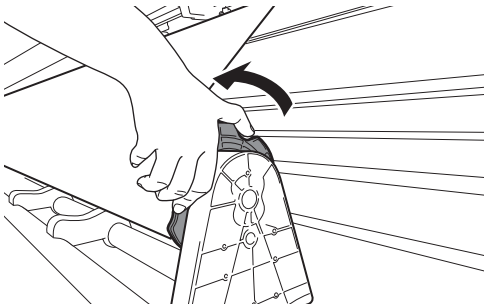

(4) **Once the media is taut, additionally take up approximately 10 cm (3.94 in.) of media.**

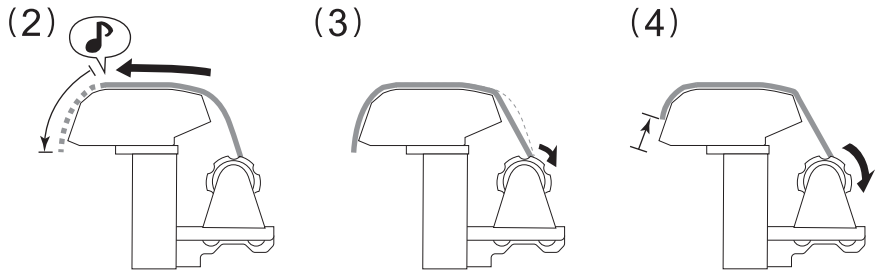

MEMO

If you take up too much media, you will hear two short beeps and the suction fan will stop. Take up the media, and then redo the procedure from step (1).

4. **Close the rear UV shield.**

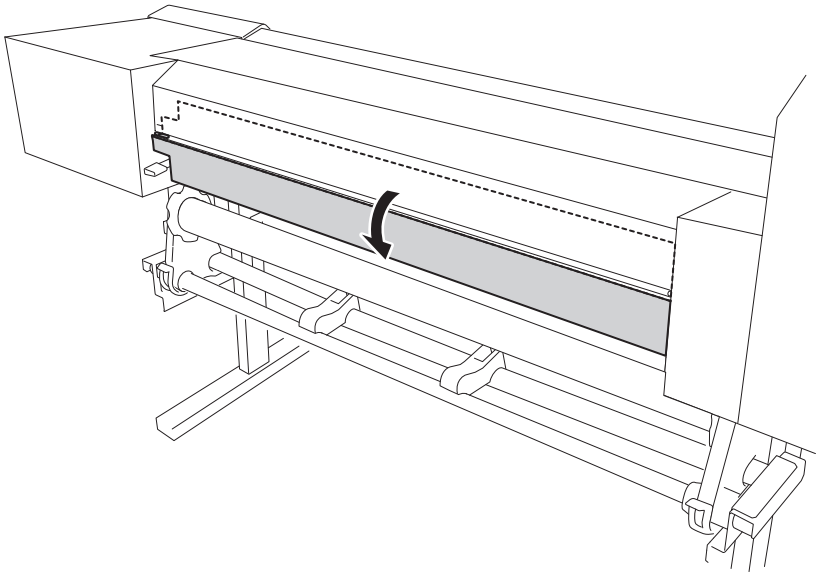

5. **(Move to the front of the printer.) Make sure both edges of the media are above the grit rollers.**

Be sure to place the right edge of the media on the right-end grit roller.

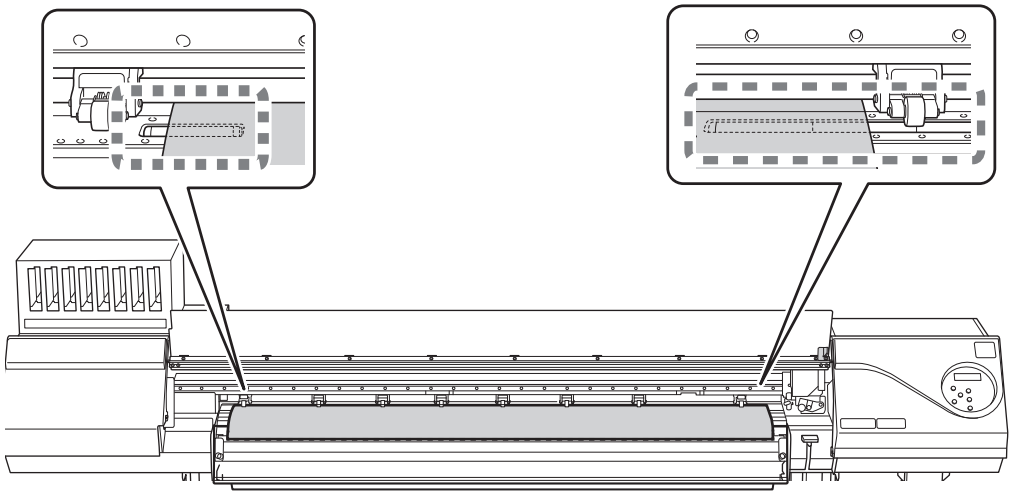

6. **Move the left and right pinch rollers, placing them on both edges of the media.**

Position them approximately 15 mm (0.59 in.) from each edge of the media.

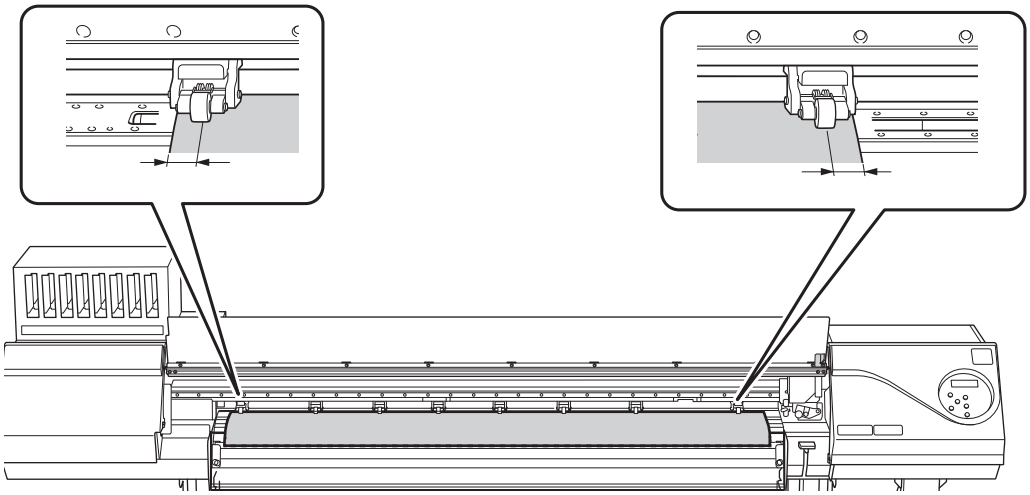

IMPORTANT

- Be sure to use the left and right pinch rollers. The force with which the media is pinched varies between the middle pinch rollers and the left and right pinch rollers. Using the middle pinch rollers to pinch the media edges will lead to unstable media feeding.
- If you want to readjust the media position, return to the back of the printer, release the media holders, and then redo the procedure from step 1. If you just stand at the front of the printer and hold the media to readjust its position forcibly, the media will be skewed during printing or will come loose, which will affect the printing quality.

MEMO

To smoothly move the pinch rollers, push down close to the rail.

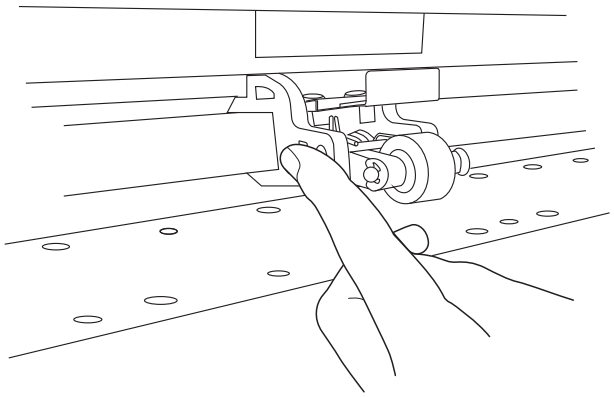

7. Move the middle pinch rollers (②) over all the remaining grit rollers covered by the media (①).

There are grit patterns (③) wherever there are grit rollers.

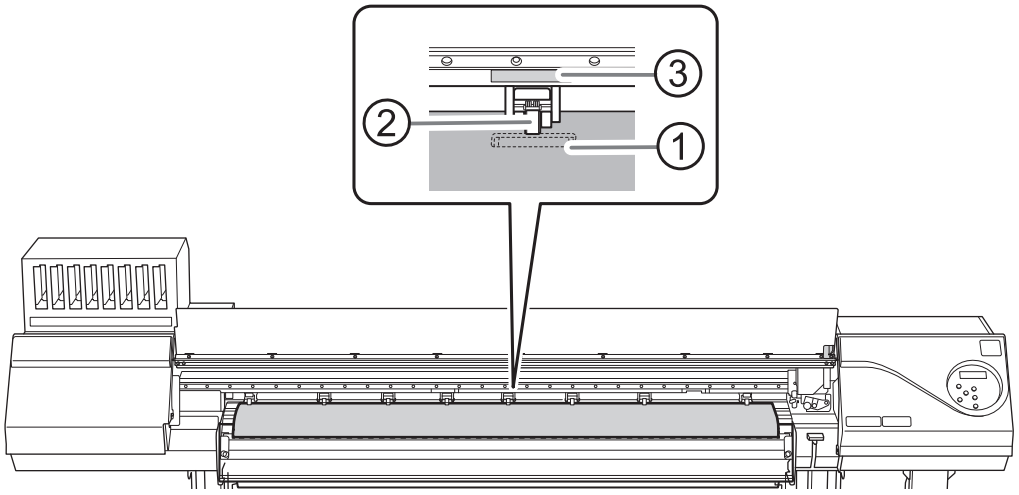

IMPORTANT

- Place the middle pinch rollers over all the grit patterns within the media width. If you have forgotten to place the middle pinch rollers, the media will be skewed during printing or will come loose, which will have an effect on the printing quality.
- There may be extra middle pinch rollers depending on the width of the media being used. Remove the remaining middle pinch rollers.

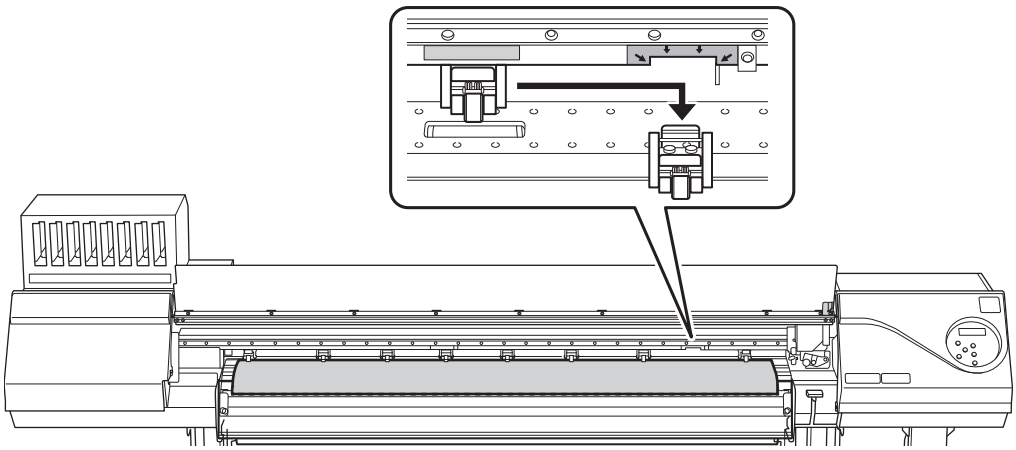

8. Lower the loading lever (front).

At this time, the message "PRESS ENTER KEY TO SET UP" is displayed on the screen, but do not press [ENTER] yet, and proceed to the next step.

IMPORTANT

If you want to readjust the media position, return to the back of the printer, release the media holders, and then redo the procedure from step 1. If you just stand at the front of the printer and hold the media to readjust its position forcibly, the media will be skewed during printing or will come loose, which will affect the printing quality.

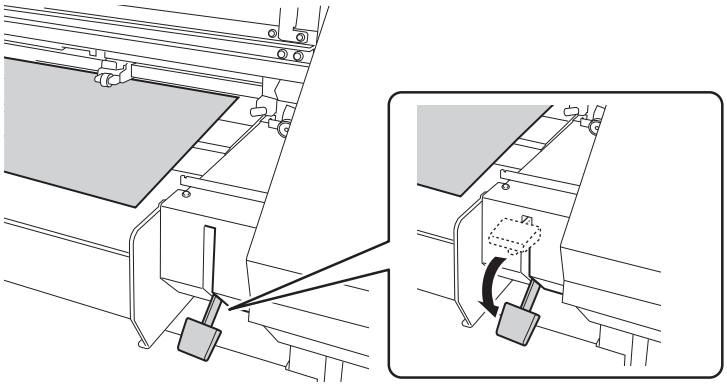

2. B: Determine the positions of the media.

This section describes how to determine the positions of the media without using the media skewing prevention function. Refer to this information when using transparent media, whose edges cannot be detected, and when "EDGE DETECTION" or "SKEWING CORR" is set to "DISABLE".

Procedure

1. **Determine the left and right positions of the media with the grit patterns used as the reference.**

   Note the following points when determining the positions.

   - Hold the media holders from the outside and move the media.
   - Ensure that the left edge of the media is positioned so that it is within the range of the grit pattern of the left edge.
   - Ensure that the right edge of the media is positioned so that it is within the range of one of the grit patterns.

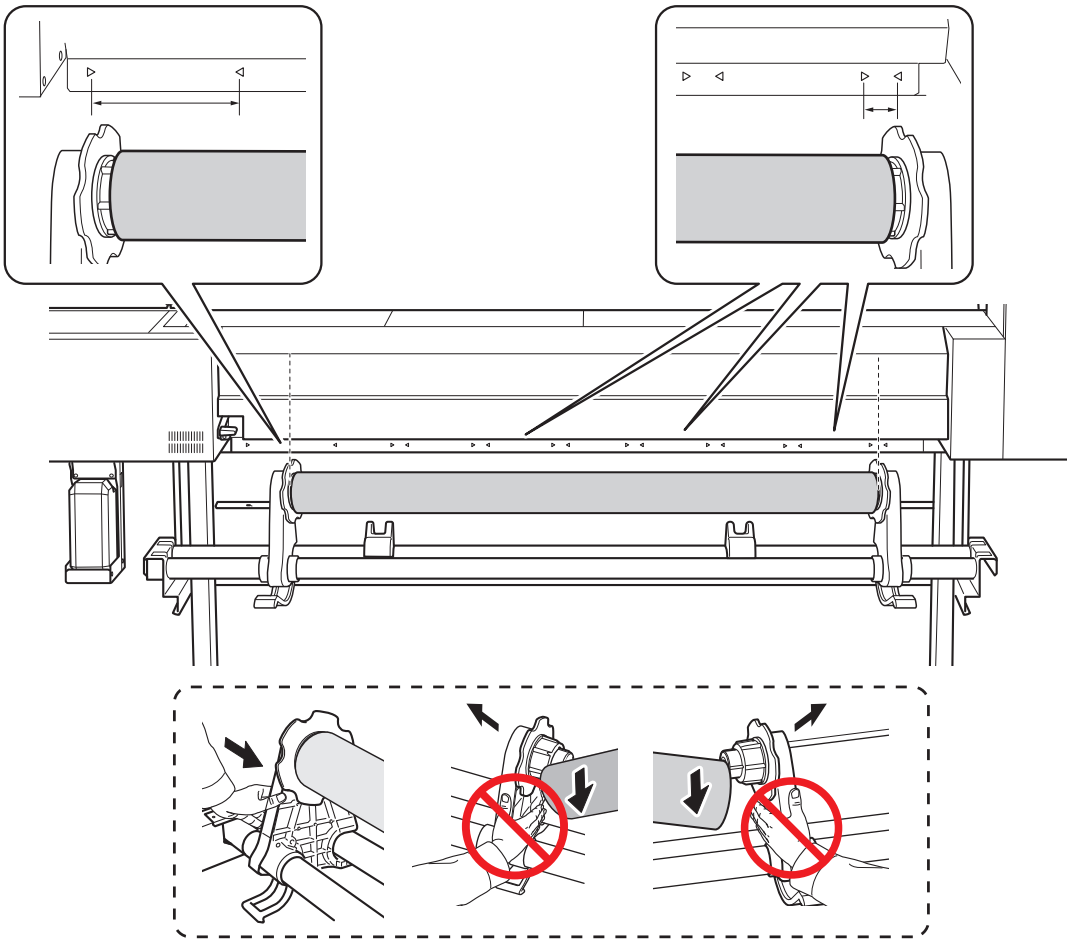

⚠ CAUTION

Do not hold places other than those instructed. Do not move the media by holding it directly.

Otherwise the media may fall off the media holder and cause injury.

IMPORTANT

Firmly decide the left and right side positions of the media at this point.

After this procedure is completed, if the left and right side positions do not fit the proper positions when securing the media with pinch rollers, you will have to go back to this step to redo this procedure. If you just hold the media to readjust its position forcibly, the media will be skewed during printing, which will have an adverse effect on the printing results.

2. **Secure the media holders.**

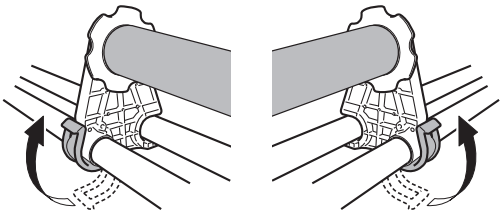

3. **Pass the leading edge of the media between the pinch rollers (①) and the grit rollers (②).**

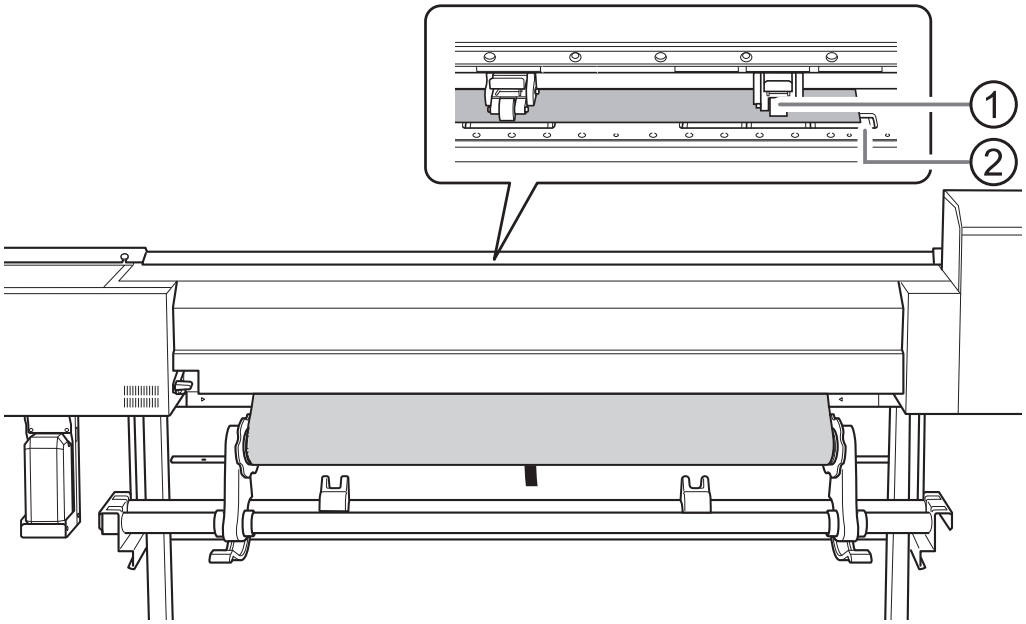

MEMO

If the media cannot be loaded properly because the media suction is too weak or too strong, press [PAUSE]. Each time you press [PAUSE], the suction force is switched between three levels.

4. **Lower the loading lever (rear).**

The media is held in place.

At this time, the message "PRESS ENTER KEY TO SET UP" is displayed on the screen, but do not press [ENTER] yet, and proceed to the next step.

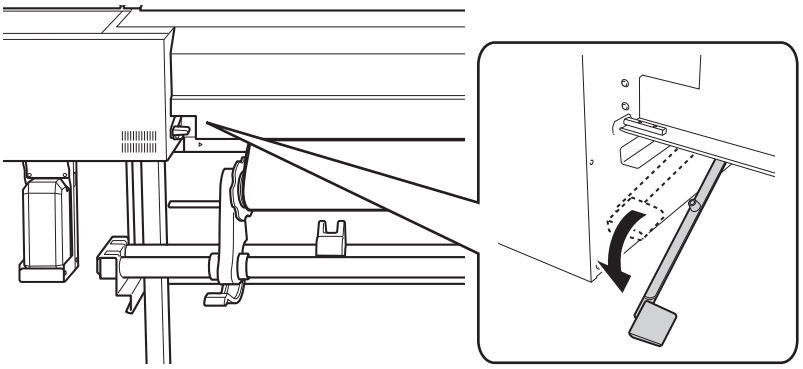

5. **Close the rear UV shield.**

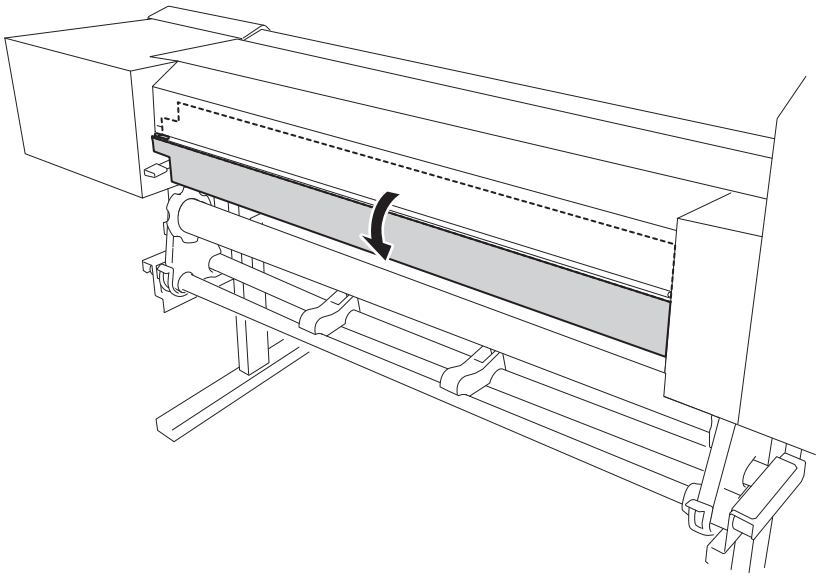

6. **(Move to the front of the printer.) Gently hold down the media and raise the loading lever (front).**
The media is released.

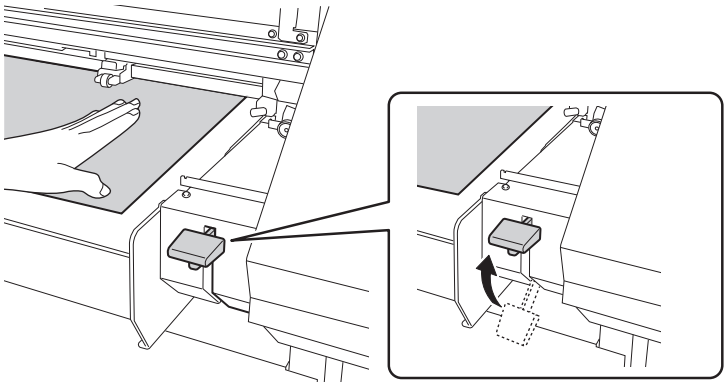

7. **Pull out the media over the apron.**

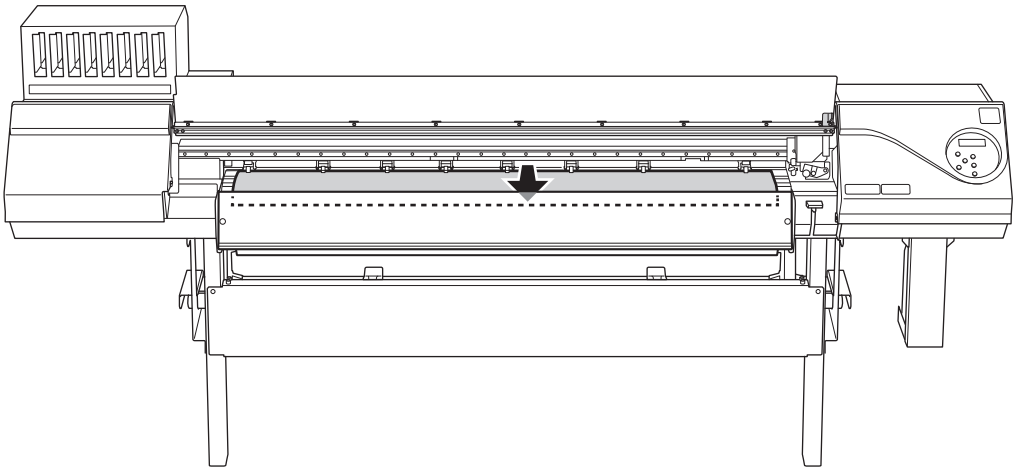

8. **Make sure both edges of the media are above the grit rollers.**

Be sure to place the right edge of the media on the three grit rollers aligned at the right end.

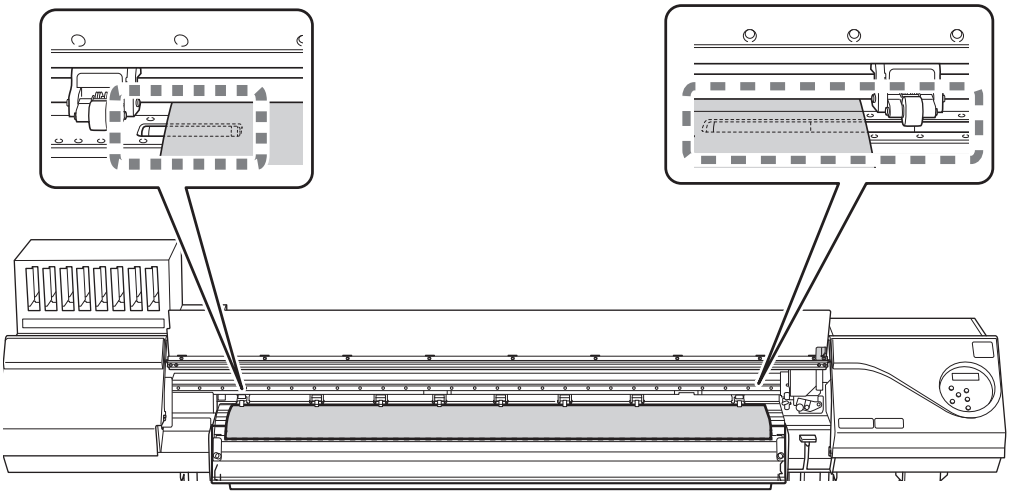

9. **Move the left and right pinch rollers, placing them on both edges of the media.**

Position them approximately 15 mm (0.59 in.) from each edge of the media.

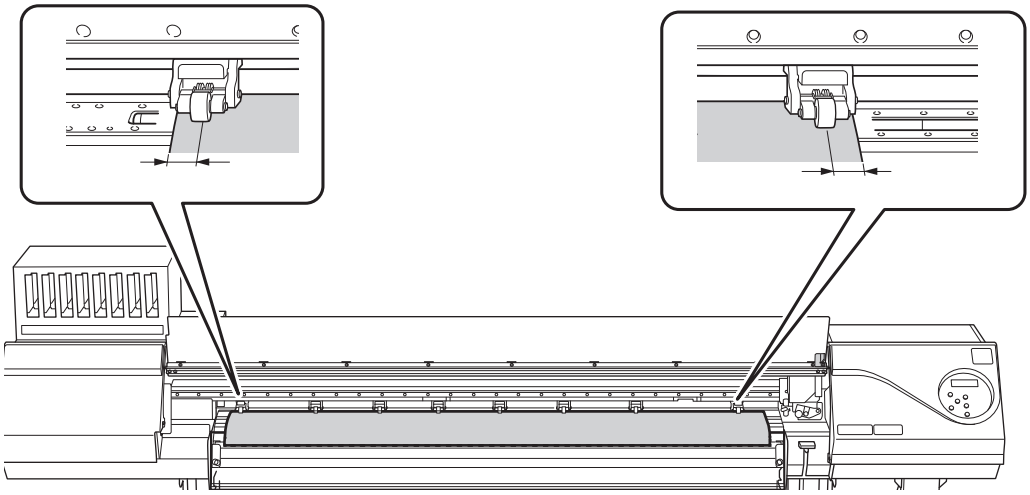

IMPORTANT

- Be sure to use the left and right pinch rollers. The force with which the media is pinched varies between the middle pinch rollers and the left and right pinch rollers. Using the middle pinch rollers to pinch the media edges will lead to unstable media feeding.
- If you want to readjust the media position, return to the back of the printer, release the media holders, and then redo the procedure from step 1. If you just stand at the front of the printer and hold the media to readjust its position forcibly, the media will be skewed during printing or will come loose, which will affect the printing quality.

MEMO

To smoothly move the pinch rollers, push down close to the rail.

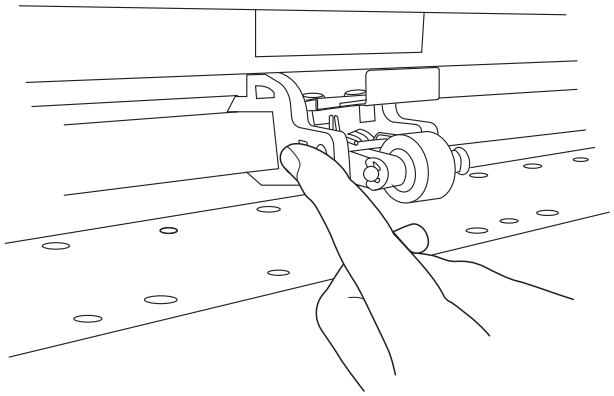

10. Move the middle pinch rollers (②) over all the remaining grit rollers covered by the media (①).

There are grit patterns (③) wherever there are grit rollers.

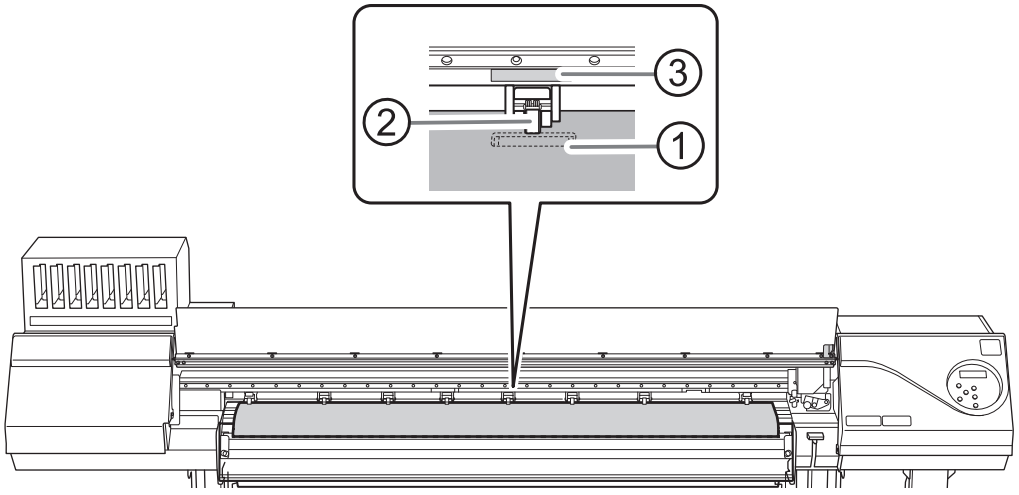

IMPORTANT

- Place the middle pinch rollers over all the grit patterns within the media width. If you have forgotten to place the middle pinch rollers, the media will be skewed during printing or will come loose, which will have an effect on the printing quality.
- There may be extra middle pinch rollers depending on the width of the media being used. Be sure to remove the remaining middle pinch rollers.

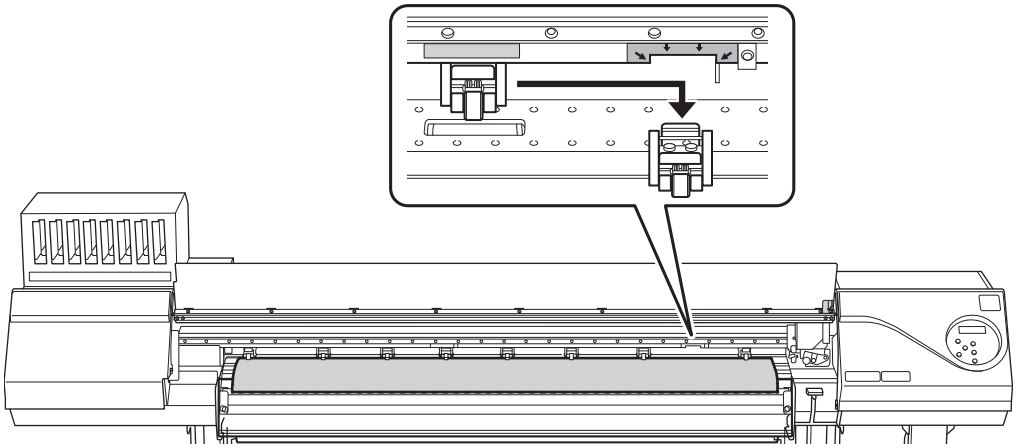

11. **Hold the media at the center and pull it out, being sure to keep it straight and all areas of the media to be taut.**

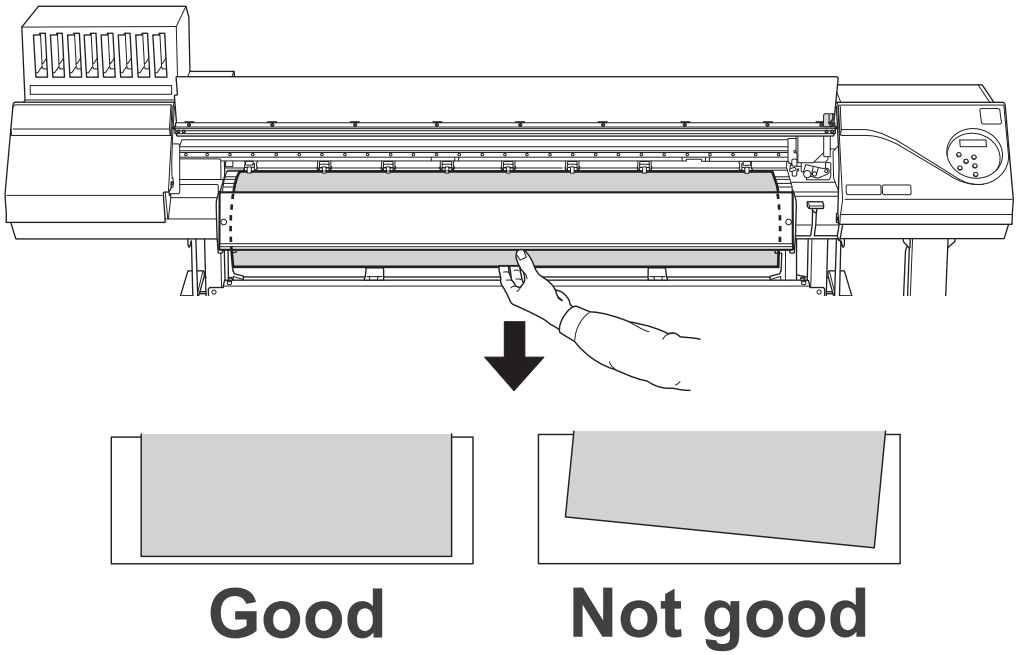

12. **Lower the loading lever (front).**

At this time, the message "PRESS ENTER KEY TO SET UP" is displayed on the screen, but do not press [ENTER] yet, and proceed to the next step.

IMPORTANT

If you want to readjust the media position, return to the back of the printer, release the media holders, and then redo the procedure from step 1. If you just stand at the front of the printer and hold the media to readjust its position forcibly, the media will be skewed during printing or will come loose, which will affect the printing quality.

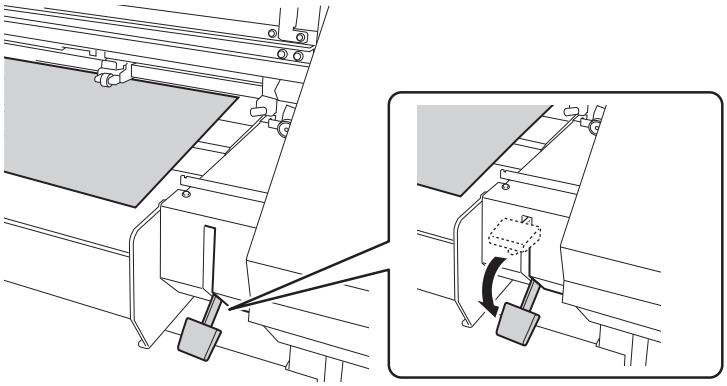

3. Finish setup.

Procedure

1. **Line up the edges of the media with the centers of the holes of the left and right media clamps.**

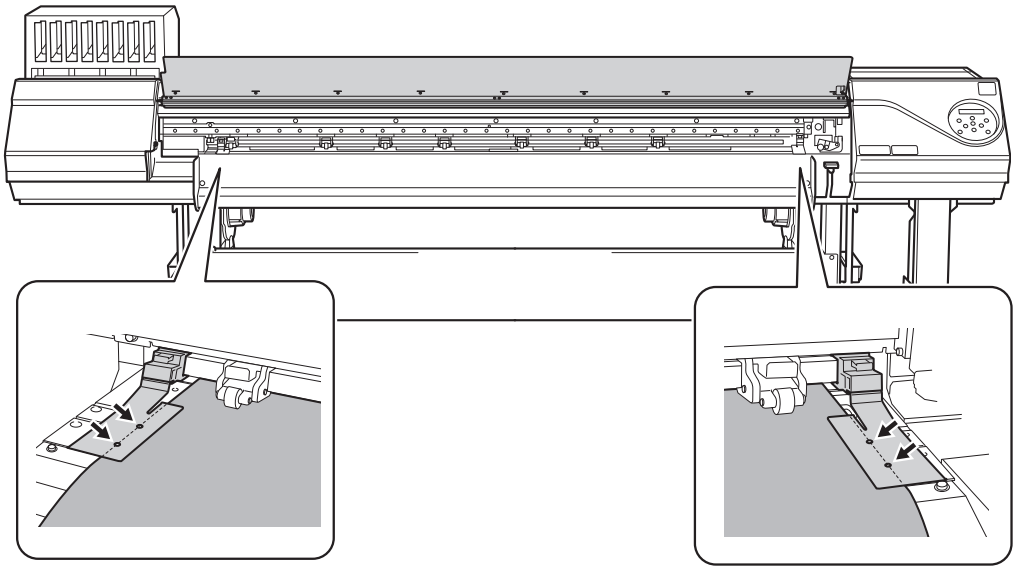

2. **Close the front cover.**

3. **Press [ENTER].**

When you press [ENTER], the cutting carriage moves and detects the width of the media. This operation is called initialization. When initialization ends, [SETUP] on the operation panel lights, and the printable width is displayed on the screen.

IMPORTANT

Remove when not using roll media.

Do not leave roll media loaded on the machine for a long period of time. Be sure to remove and store the media when not in use. Leaving the roll media loaded on the machine for a long period of time will cause the media to sag, which may deteriorate the printing quality and may also lead to motor errors.

4. **If you have moved the machine to load the media, return the machine to its original position and fix the casters in place after loading the media.**

(1) **Orient the casters so that they face forward.**

(2) **Lock the casters.**

(3) **Use caster holders to fix the casters in place.**

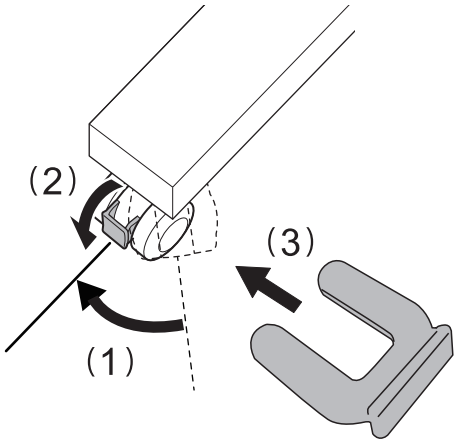
(2)
(3)
(1)

Setup of Sheet Media

Load the sheet media on the printer. When you have finished loading the media, [SETUP] lights. This work is referred to as "Setup of Media."

1. A: Determine the positions of the media.

This section describes how to use the suction fan to prevent media skewing. When using transparent media, whose edges cannot be detected, and when "EDGE DETECTION" or "SKEWING CORR" is set to "DISABLE", the suction fan does not activate, so media cannot be loaded with this procedure. In these cases, refer to 1. B: Determine the positions of the media.(P. 55).

Procedure

1. **Open the front cover.**

2. **When the print head height is "LOW" or "HIGH", move the media clamps to the outside of the grit rollers on the left and right edges respectively.**

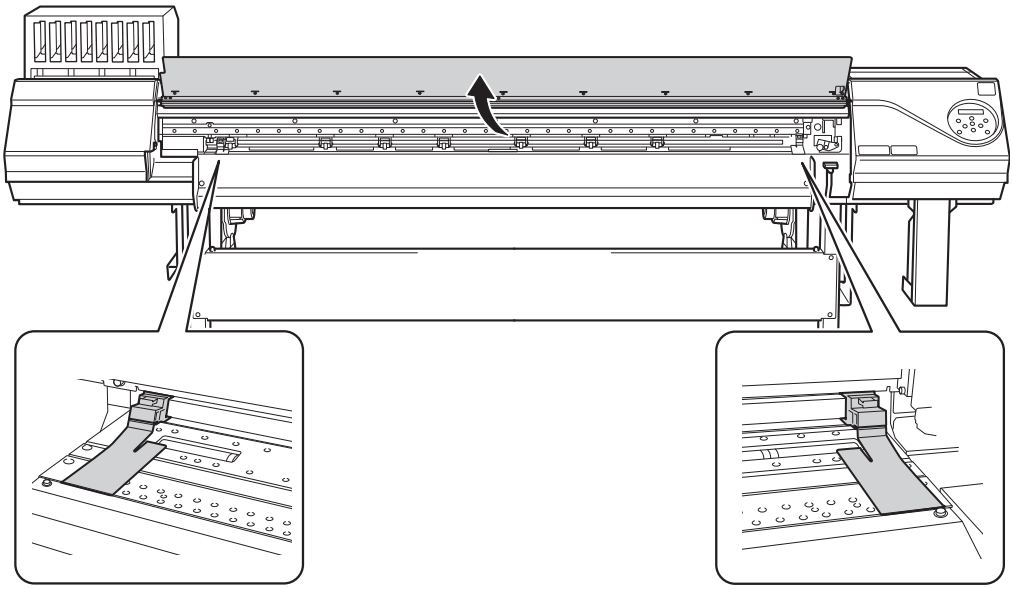

3. **When the print head height is "SpLOW", remove the media clamps.**

   The media clamps must be removed to perform setup.

4. **Move to the rear of the printer and open the rear UV shield.**

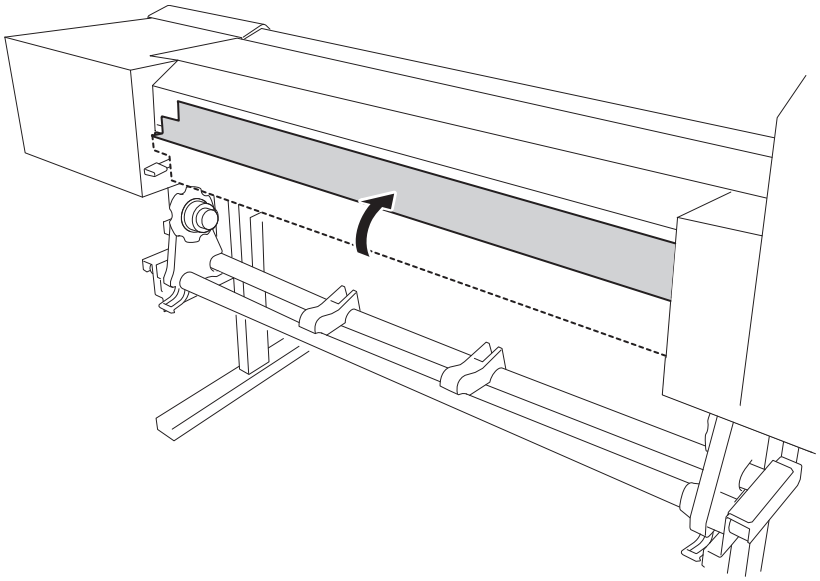

5. **Release the locking mechanisms of the media holders, and then draw them to the left and right ends respectively.**

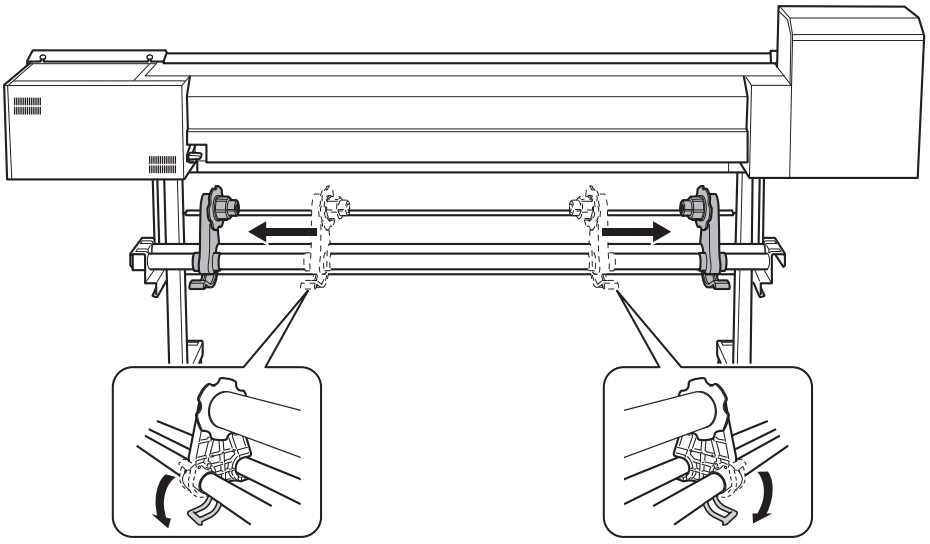

6. **From the rear of the printer, pass the leading edge of the media between the pinch rollers (①) and the grit rollers (②).**

You will hear a beep. Approximately 5 seconds later, you will hear two beeps, and then the suction fan will activate. While this fan is operating, the media will not move backward even if you remove your hands from it.

When loading the media from the front of the printer, feed the leading edge of the media (the side where printing will start) over the platen, and then pull the media to the front to activate the suction fan.

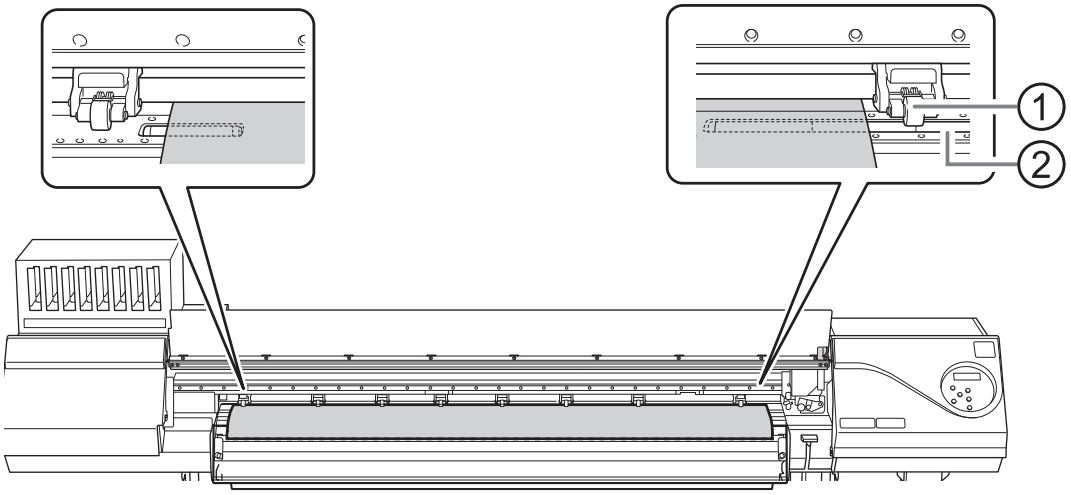

7. **Close the rear UV shield.**

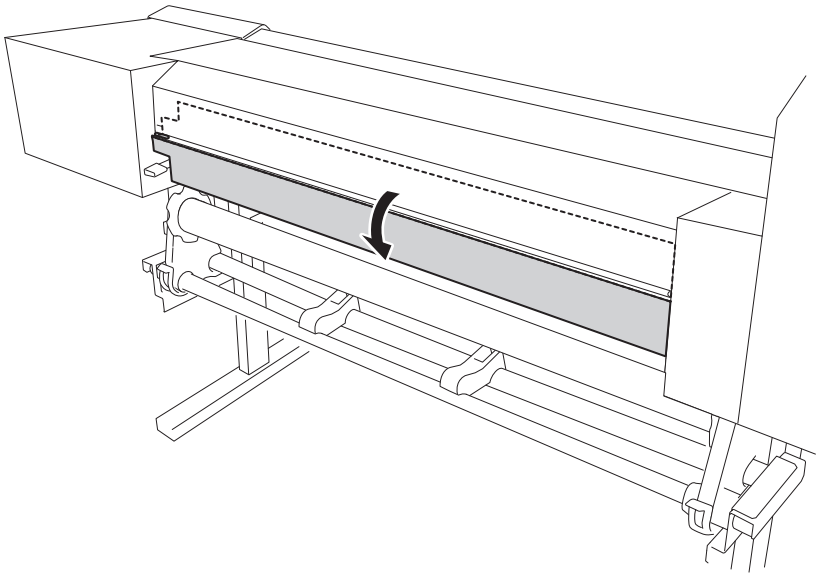

8. **(Move to the front of the printer.) Make sure both edges of the media are above the grit rollers.**

Be sure to place the right edge of the media on the right-end grit roller.

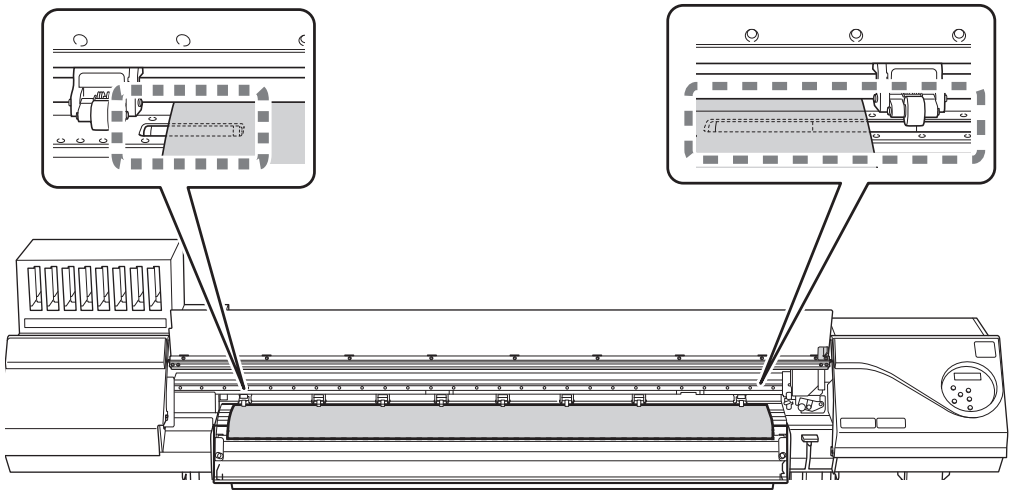

9. **Move the left and right pinch rollers, placing them on both edges of the media.**

Position them approximately 15 mm (0.59 in.) from each edge of the media.

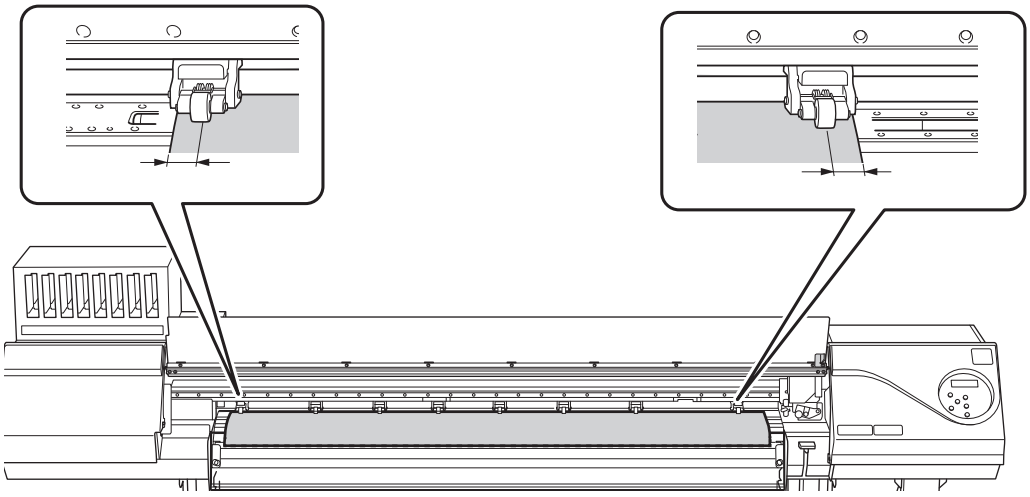

IMPORTANT

- Be sure to use the left and right pinch rollers. The force with which the media is pinched varies between the middle pinch rollers and the left and right pinch rollers. Using the middle pinch rollers to pinch the media edges will lead to unstable media feeding.
- If you want to readjust the media position, redo the procedure from step 6.

MEMO

To smoothly move the pinch rollers, push down close to the rail.

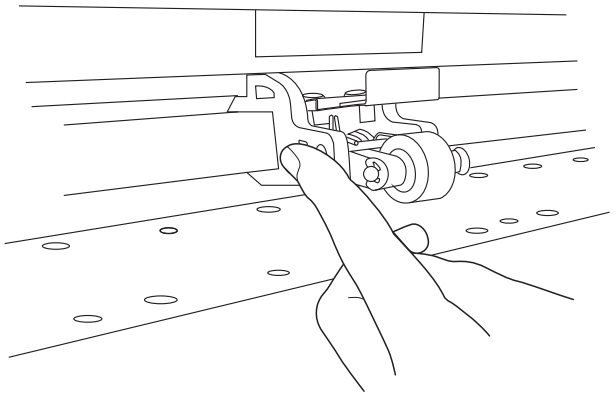

10. **Move the middle pinch rollers (②) over all the remaining grit rollers covered by the media (①).**

There are grit patterns (③) wherever there are grit rollers.

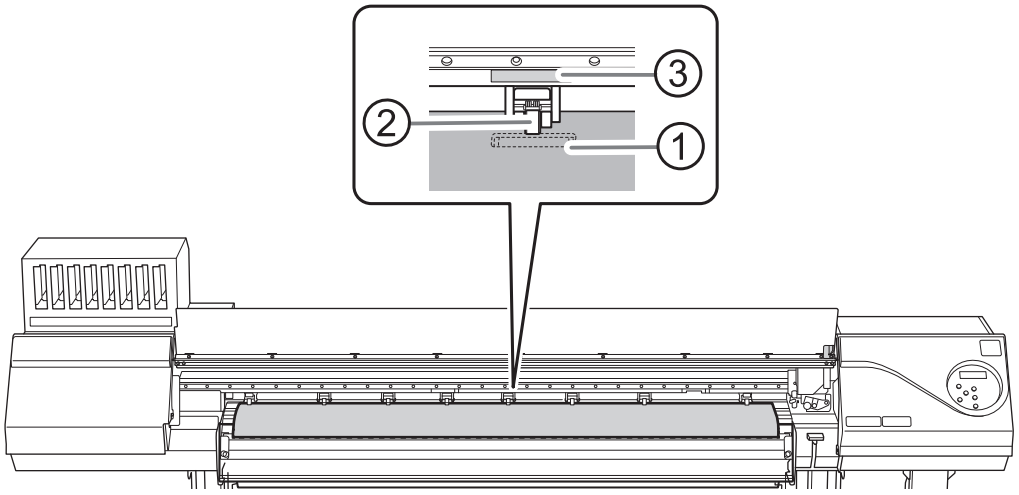

IMPORTANT

- Place the middle pinch rollers over all the grit patterns within the media width. If you have forgotten to place the middle pinch rollers, the media will be skewed during printing or will come loose, which will have an effect on the printing quality.
- There may be extra middle pinch rollers depending on the width of the media being used. Remove the remaining middle pinch rollers.

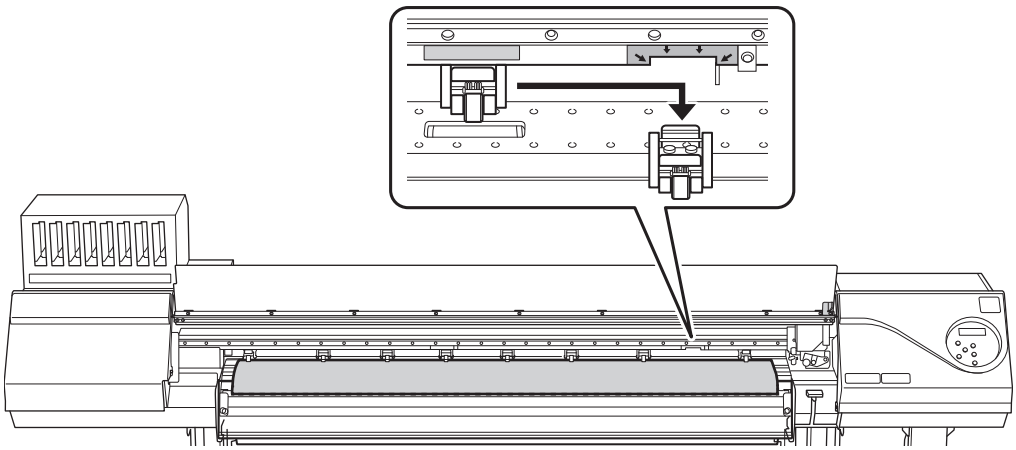

11. Lower the loading lever (front).

At this time, the message "PRESS ENTER KEY TO SET UP" is displayed on the screen, but do not press [ENTER] yet, and proceed to the next step.

IMPORTANT

If you want to readjust the media position, redo the procedure from step 6.

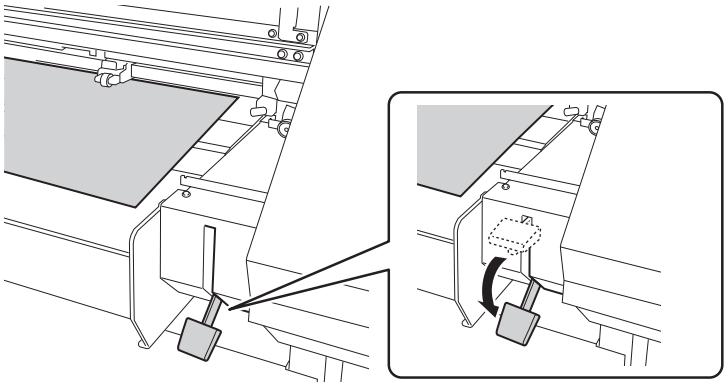

1. B: Determine the positions of the media.

This section describes how to determine the positions of the media without using the suction fan. Refer to this information when using transparent media, whose edges cannot be detected, and when "EDGE DETECTION" or "SKEWING CORR" is set to "DISABLE".

Procedure

1. **Open the front cover.**

2. **When the print head height is "LOW" or "HIGH", move the media clamps to the outside of the grit rollers on the left and right edges respectively.**

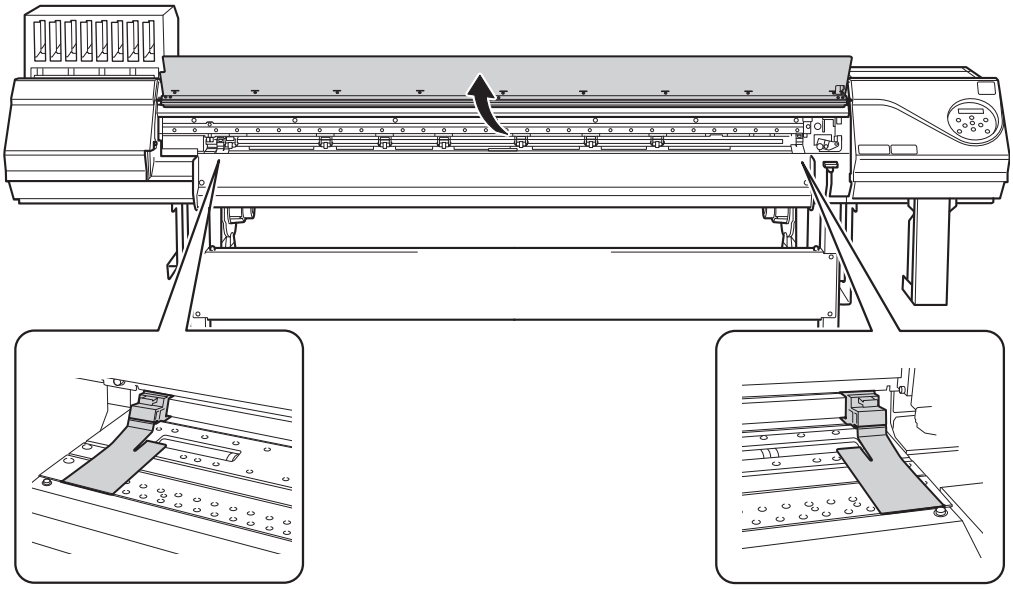

3. **When the print head height is "SpLOW", remove the media clamps.**

   The media clamps must be removed to perform setup.

4. **Move to the rear of the printer and open the rear UV shield.**

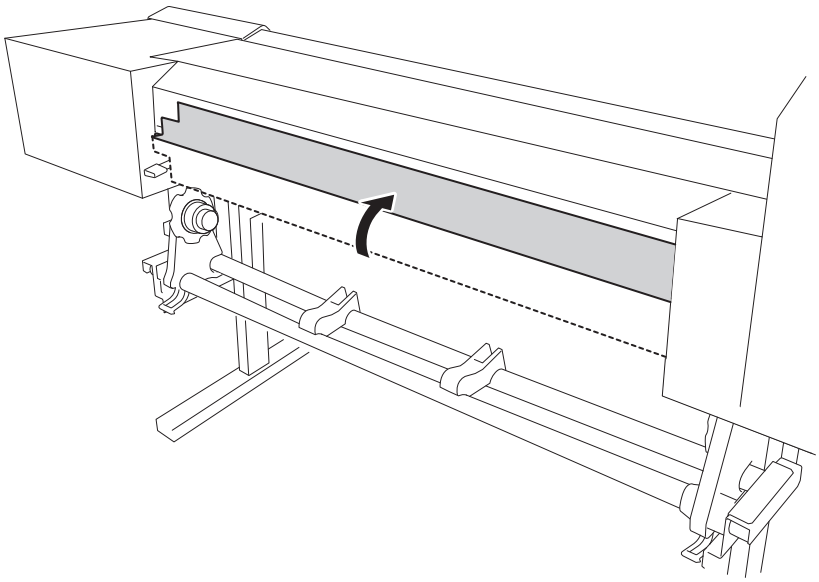

5. **Release the locking mechanisms of the media holders, and then draw them to the left and right ends respectively.**

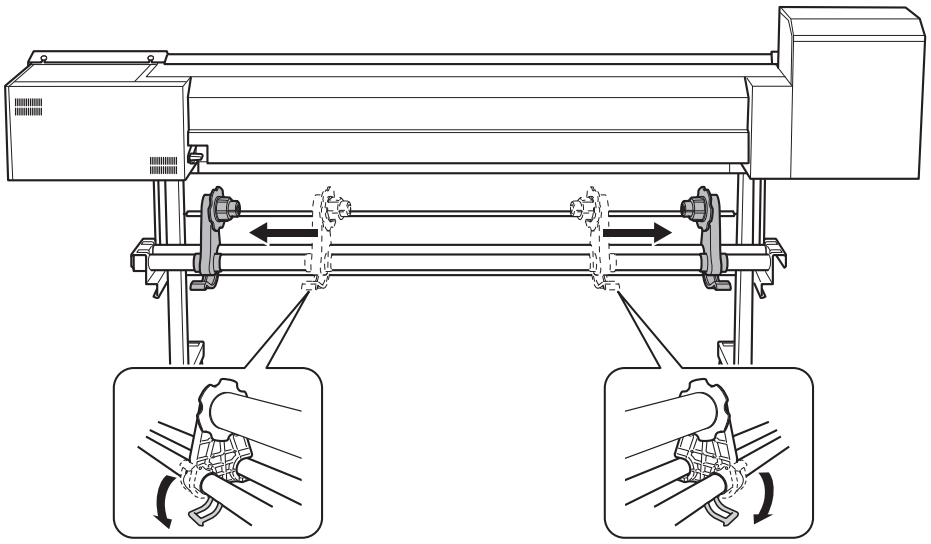

6. **Pass the leading edge of the media between the pinch rollers (①) and the grit rollers (②).**

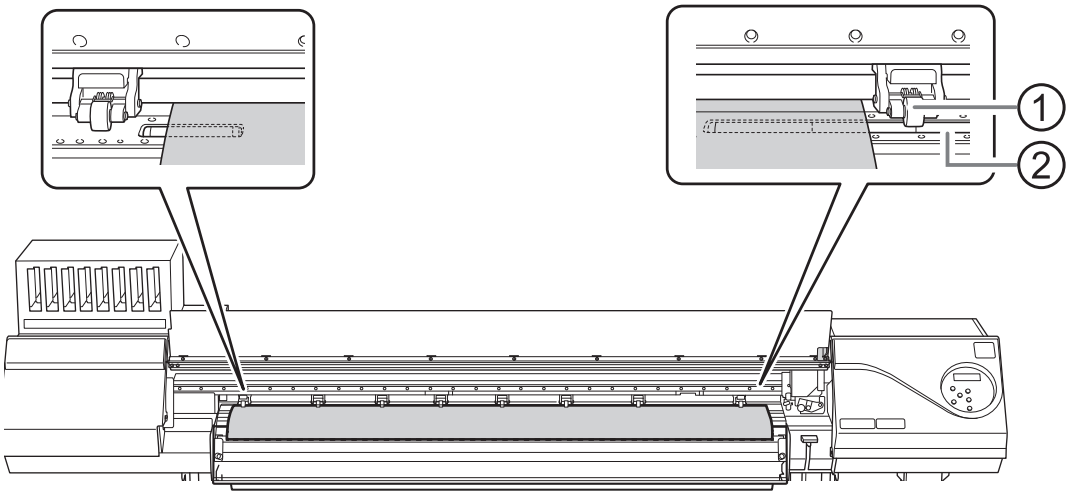

MEMO

If the media cannot be loaded properly because the media suction is too weak or too strong, press [PAUSE]. Each time you press [PAUSE], the suction force is switched between three levels.

7. **Lower the loading lever (rear).**

The media is held in place.

At this time, the message "PRESS ENTER KEY TO SET UP" is displayed on the screen, but do not press [ENTER] yet, and proceed to the next step.

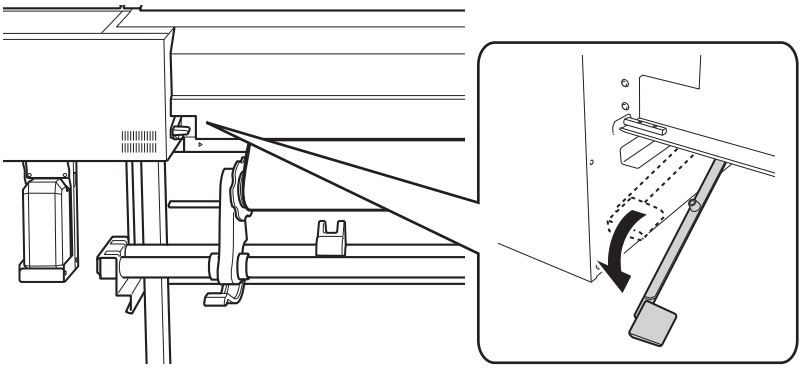

8. **Close the rear UV shield.**

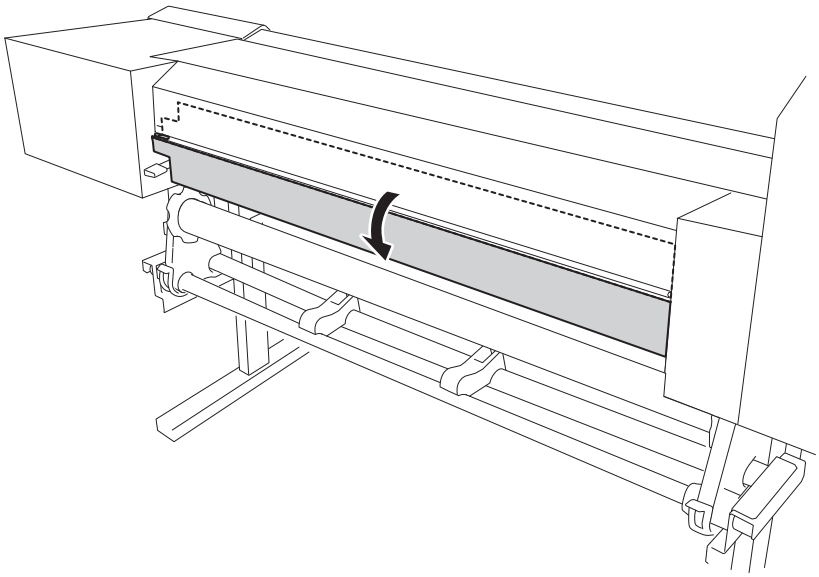

9. **(Move to the front of the printer.) Gently hold down the media and raise the loading lever (front).**
   The media is released.

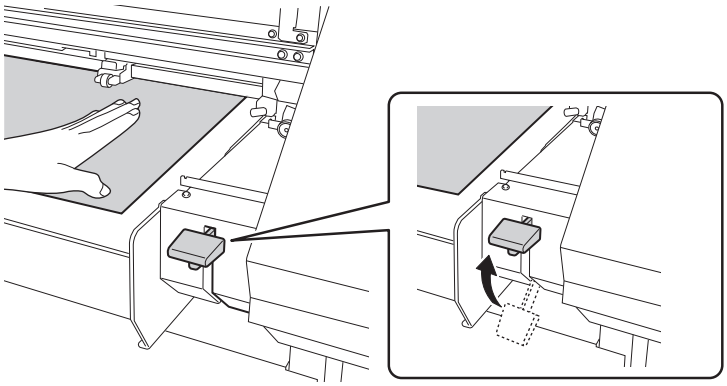

10. **Pull out the media over the apron.**

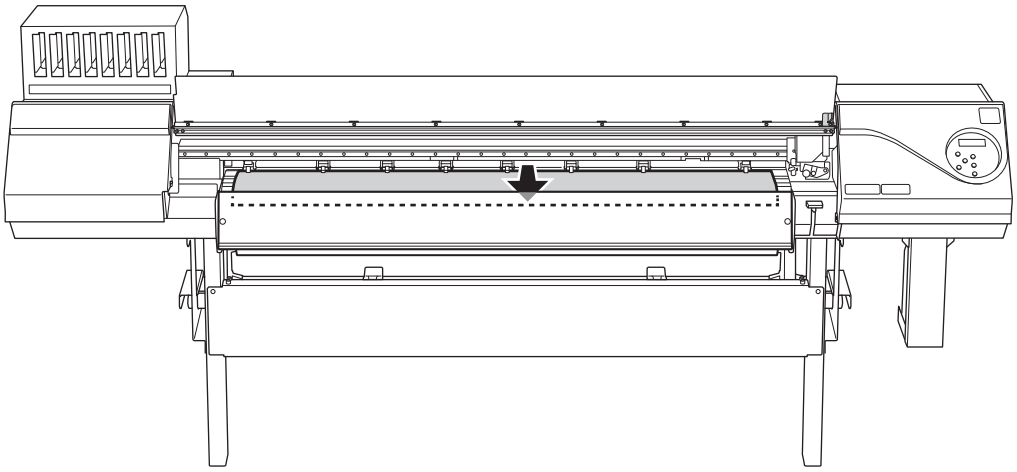

11. **Make sure both edges of the media are above the grit rollers.**

Be sure to place the right edge of the media on the three grit rollers aligned at the right end.

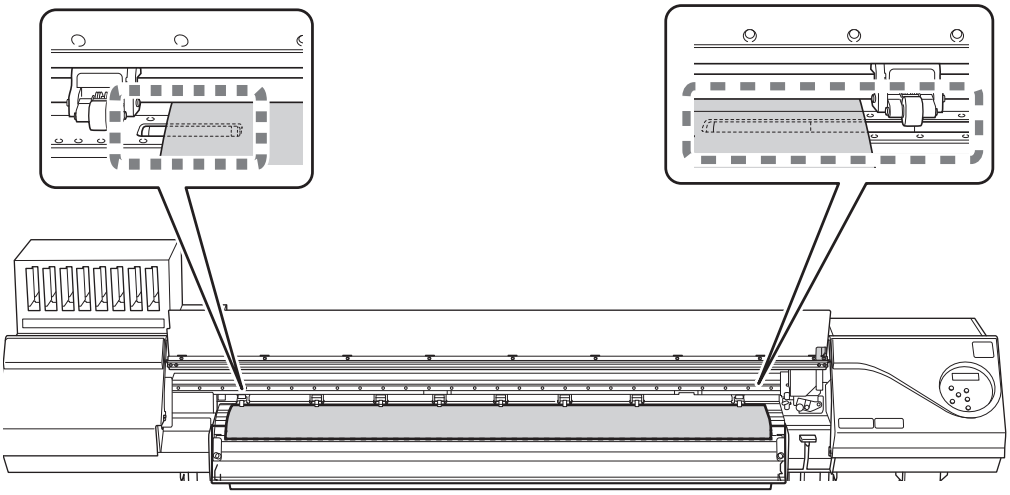

12. **Move the left and right pinch rollers, placing them on both edges of the media.**

Position them approximately 15 mm (0.59 in.) from each edge of the media.

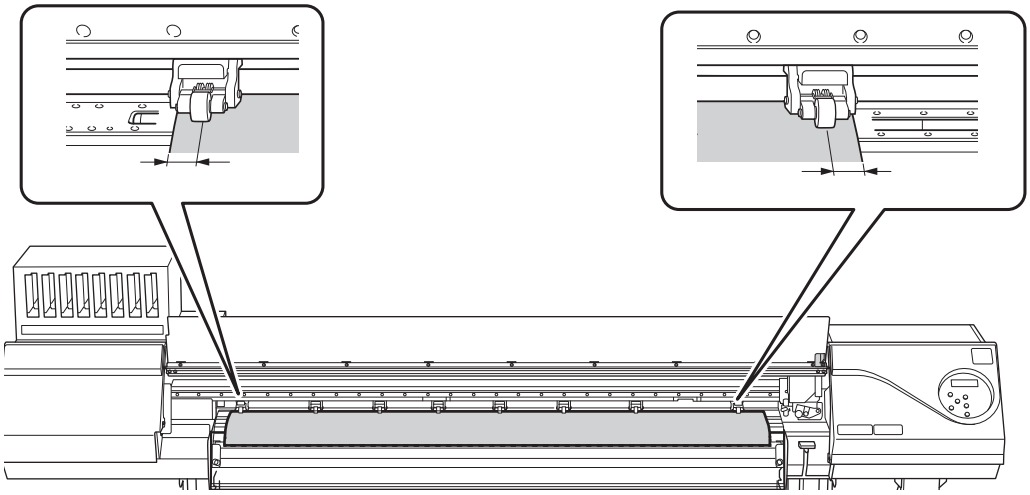

IMPORTANT

Be sure to use the left and right pinch rollers. The force with which the media is pinched varies between the middle pinch rollers and the left and right pinch rollers. Using the middle pinch rollers to pinch the media edges will lead to unstable media feeding.

MEMO

To smoothly move the pinch rollers, push down close to the rail.

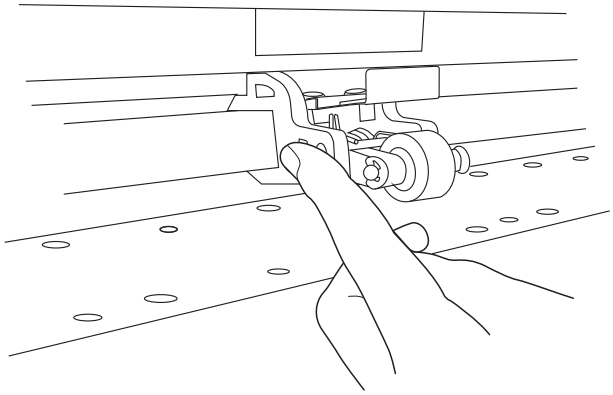

13. **Move the middle pinch rollers (②) over all the remaining grit rollers covered by the media (①).**

There are grit patterns (③) wherever there are grit rollers.

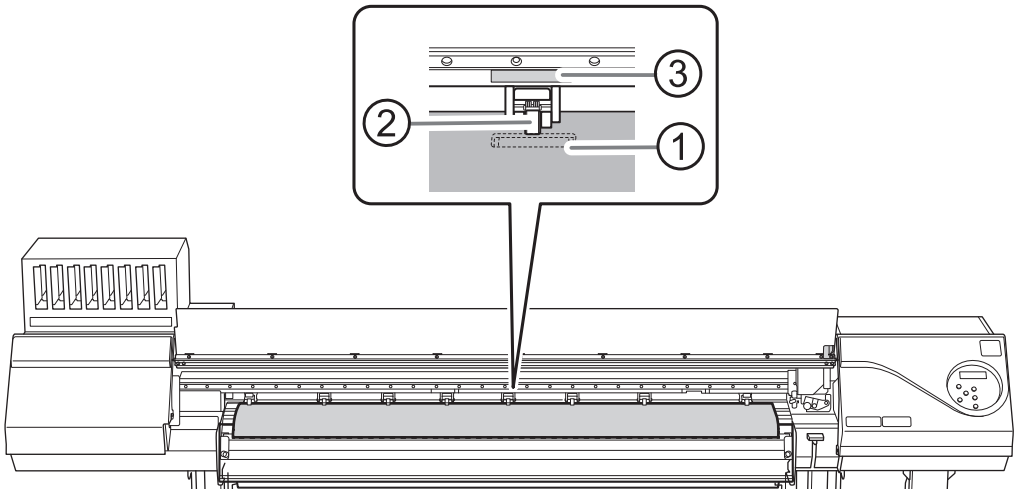

IMPORTANT

- Place the middle pinch rollers over all the grit patterns within the media width. If you have forgotten to place the middle pinch rollers, the media will be skewed during printing or will come loose, which will have an effect on the printing quality.
- There may be extra middle pinch rollers depending on the width of the media being used. Be sure to remove the remaining middle pinch rollers.

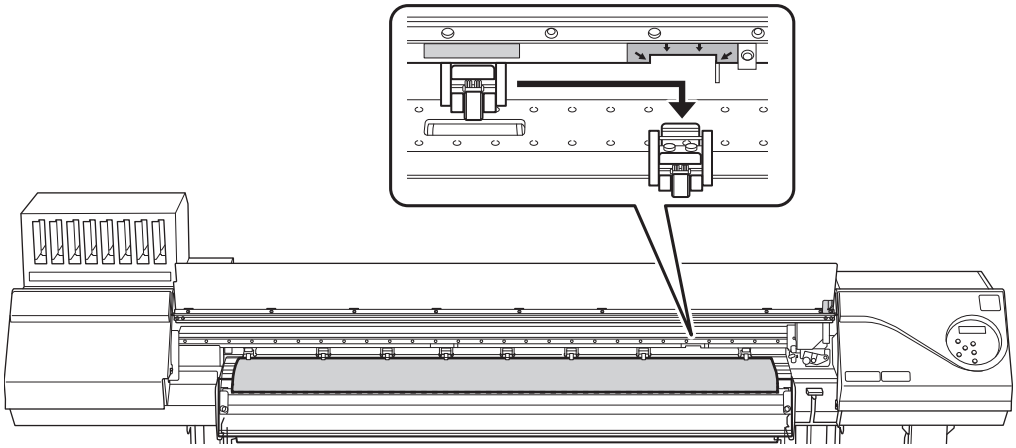

14. **Straighten the media.**

Align the media with the line indicated with the arrow in the following figure.

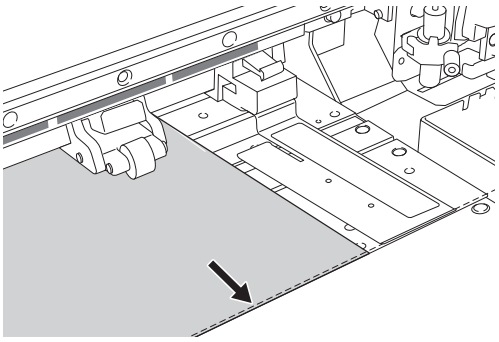

15. **Lower the loading lever (front).**

At this time, the message "PRESS ENTER KEY TO SET UP" is displayed on the screen, but do not press [ENTER] yet, and proceed to the next step.

IMPORTANT

If you want to readjust the media position before securing it in place, redo the procedure from step 6.

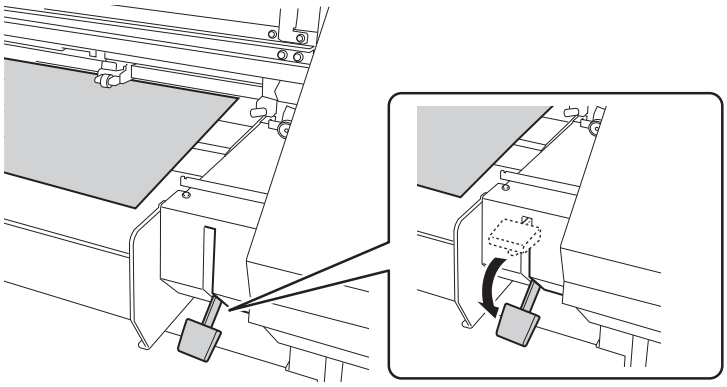

2. Finish setup.

Procedure

1. **Line up the edges of the media with the centers of the holes of the left and right media clamps.**

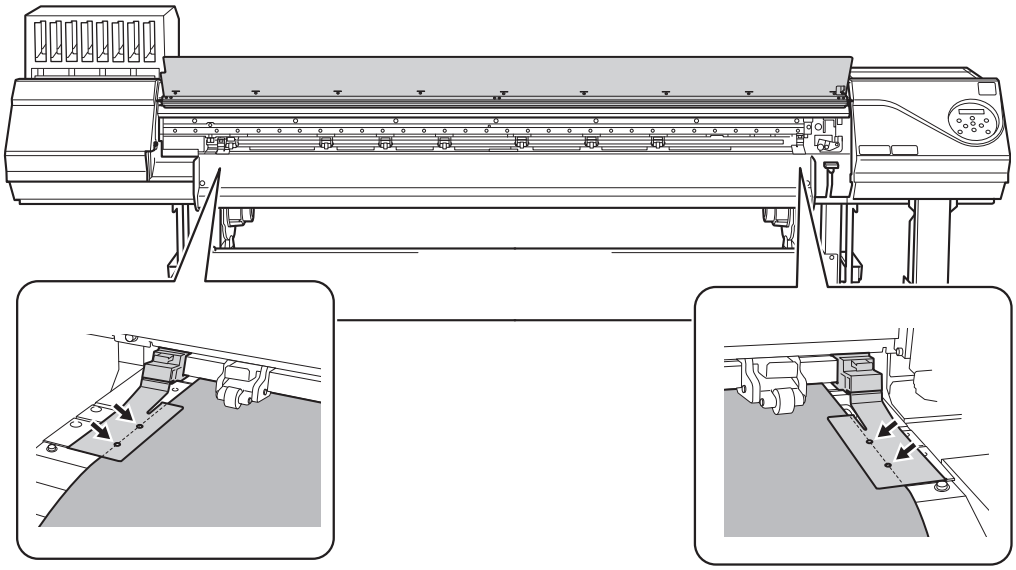

2. **Close the front cover.**

3. **Press [ENTER].**

When you press [ENTER], the cutting carriage moves and detects the width of the media. This operation is called initialization. When initialization ends, [SETUP] on the operation panel lights, and the printable width is displayed on the screen.

4. **If you have moved the machine to load the media, return the machine to its original position and fix the casters in place after loading the media.**

(1) **Orient the casters so that they face forward.**

(2) **Lock the casters.**

(3) **Use caster holders to fix the casters in place.**

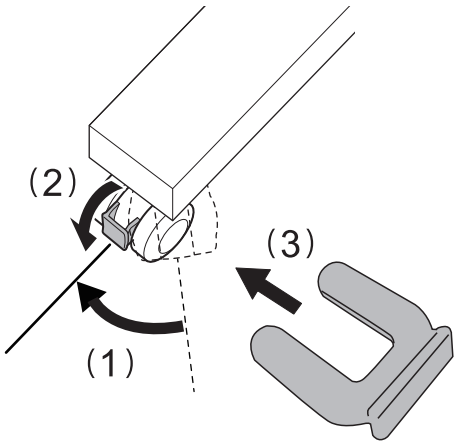

Separating the Media

Procedure

1. **Remove the media clamps if they are attached to the machine.**
2. **Close the front cover.**
3. **Check that [SETUP] is lit.**
4. **Press [FUNCTION].**
5. **Press [▼] several times to display the following screen.**

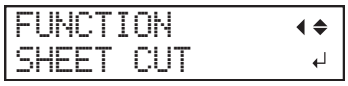

6. **Press [ENTER].**

   From its position on the blade protection line prior to [ENTER] being pressed (①), the media moves to a position on the separating line (②) and is separated.

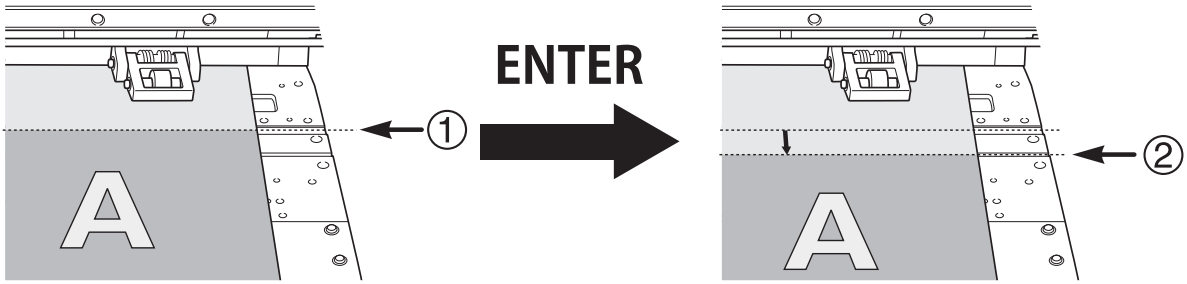

MEMO

You can configure settings in the software RIP for automatic media separation after output has finished. For information on how to configure the settings, refer to the documentation for the software RIP you are using.

IMPORTANT

Separation Operations

- When performing separation, do not use [▲] to pull the media back. If the distance from the end of the media to the separation location is short, separation may not be performed smoothly.

Give Attention to the Media Composition

- For some types of media, separation is not possible.
- Some types of media may remain on the platen after separation. If the media remains on the platen, remove it by hand.

What to Do First after Installation

Accurately Adjusting the Misalignment of the Ink Landing Position

This adjusts the misalignment of the ink landing position.

This adjustment must be performed in the following cases.

- When using this machine for the first time
- When changing the media to use
- When you have changed the print-head height
- When printing does not improve with "MEDIA GAP ADJ SIMPLE SETTING"

Procedure

1. **Press [MENU].**

2. **Press [▼] several times to display the following screen.**

3. **Press [▶], then [▲] to display the screen shown below.**

4. **Press [▶] to display the following screen.**

5. **Press [ENTER].**

   Printing of the test pattern starts.

6. **When printing is finished, press [▼], then [▶] to display the screen shown below.**

7. **View the printed test pattern, and then determine the correction values from "MEDIA GAP ADJ. No.1" to "MEDIA GAP ADJ. No.4".**

   Select the value that gives the least misalignment between the two lines. In the case of the following figure, select "+5" for NO. 1. When you cannot choose between two sequential numbers, select a value that is between them (you can set correction values in units of "0.5").

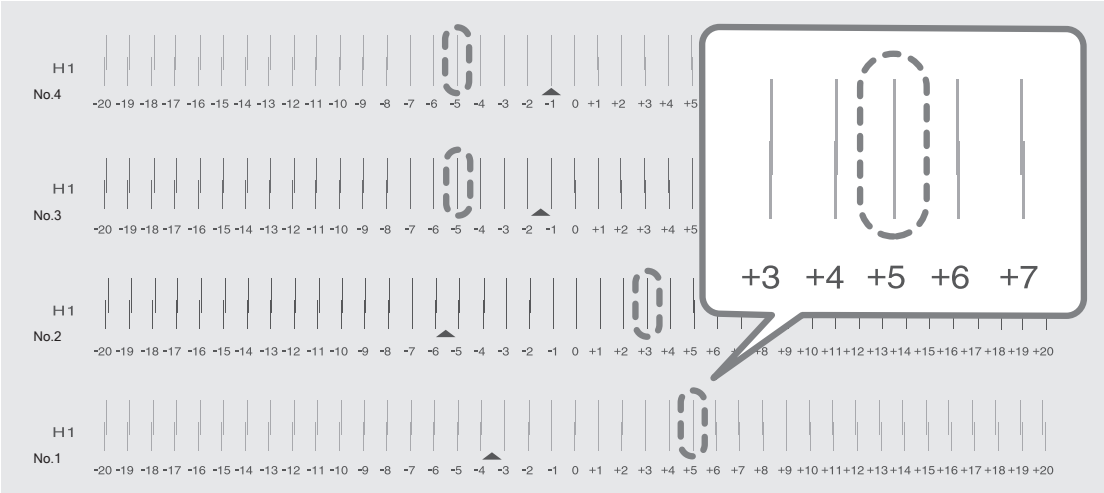

8. **Set the correction values from "No.1" to "No.4".**

(1) **Press [◀] or [▶] to select a value from "No.1" to "No.4".**

(2) **Press [▲] or [▼] to select the correction value.**

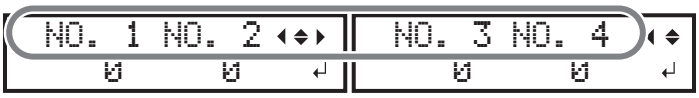

(3) **When you have finished setting the correction values, press [ENTER].**

The screen shown below appears again.

9. **Press [▼] to display the following screen.**

10. **Press [ENTER].**

Printing of the test pattern starts.

11. **Check the test pattern to see whether the correction was successful.**

For all the correction values, check that the misalignment is minimized for the two vertical lines indicated by "▲" (that is, the current correction value). If the misalignment is smaller for another set of vertical lines, set the correction value again.

12. **When you have successfully performed the correction, press [MENU] to go back to the original screen.**

RELATED LINKS

- P. 144Adjusting the Misalignment of the Ink Landing Position

Checking before Output

LAN (Local Area Network) Settings

Check that you can perform communication through the LAN (Local Area Network).

The LAN is enabled if the status LED (②) on the LAN connector located on the side of the printer is lit in green.

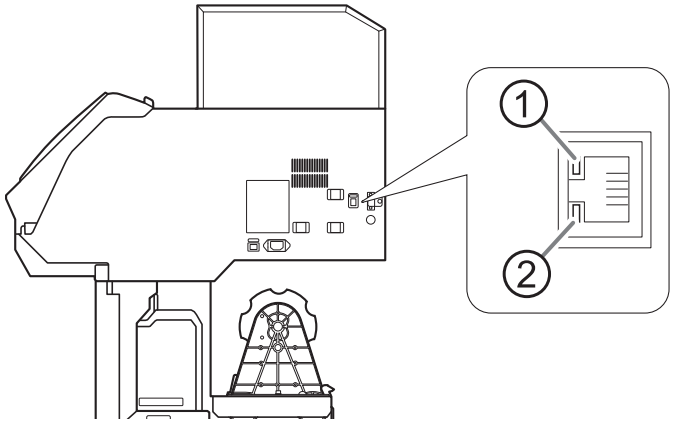

①	Activity LED	This flashes yellow while data is being received from the network.
②	Status LED	This indicates the status of the communication function. When it lights in green, communication is possible.

Preventing Sedimentation in Inks

The precipitation of the ingredients in the ink disables printing in normal color. So that the ink mixes well, shake the ink cartridge horizontally with a stroke length of around 5 cm (2 in.) from each end of the ink cartridge.

- Remove the white ink cartridge, shake it 50 times (about 20 seconds), and then reinsert this cartridge.
- The ink cartridges for colors other than white do not need to be shaken before every operation, but be sure to shake them when installing new ones.

The ingredients in white ink tend to settle. Each day, before starting the day's operations, be sure to shake this cartridge. Allowing the ink to stand without carrying out these steps can cause the settled material to harden, resulting in malfunction or other problems.

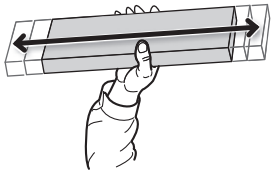

IMPORTANT

- Before shaking the ink cartridge, wipe off any ink from around its mouth. If you do not wipe off the ink, it may splatter when you shake the ink cartridge.
- When you have finished mixing the ink, reattach the ink cartridge immediately. Taking time to reattach the ink cartridge will adversely affect the ink path.
- Even if you are not using the printer, shake the white ink cartridge 50 times (about 20 seconds) once a week.

Pausing and Canceling Output

You can pause and cancel output before it finishes.

Pausing and Resuming Output

IMPORTANT

Resuming printing may produce horizontal stripes at the place where printing was paused.

Procedure

1. **Press [PAUSE] before printing finishes.**
   This pauses the printing operation.
2. **Press [PAUSE] again.**
   The printing operation resumes.

Canceling Output

Procedure

1. **Press [PAUSE] before printing finishes.**
   This pauses the printing operation.
2. **Stop sending the output data from the computer.**
3. **When the screen shown below appears, hold down [PAUSE] for 1 second or longer.**

   This cancels the printing operation.

Replacing Ink Cartridges

Out-of-ink Warnings

When an ink pouch runs out, printing pauses and a warning beep sounds. Pull out the empty cartridge and insert a new one. Printing resumes.

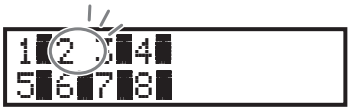

If an ink runs out, the numbers of the color that has run out flash.

Lit	Indicates that ink still remains
Flashing	Indicates that ink has run out

RELATED LINKS

- P. 67Replacing Ink Cartridges

Preventing Sedimentation in Inks

The precipitation of the ingredients in the ink disables printing in normal color. So that the ink mixes well, shake the ink cartridge horizontally with a stroke length of around 5 cm (2 in.) from each end of the ink cartridge.

- Remove the white ink cartridge, shake it 50 times (about 20 seconds), and then reinsert this cartridge.
- The ink cartridges for colors other than white do not need to be shaken before every operation, but be sure to shake them when installing new ones.

The ingredients in white ink tend to settle. Each day, before starting the day's operations, be sure to shake this cartridge. Allowing the ink to stand without carrying out these steps can cause the settled material to harden, resulting in malfunction or other problems.

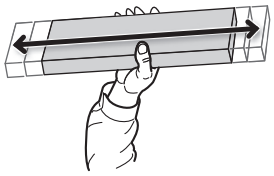

IMPORTANT

- Before shaking the ink cartridge, wipe off any ink from around its mouth. If you do not wipe off the ink, it may splatter when you shake the ink cartridge.
- When you have finished mixing the ink, reattach the ink cartridge immediately. Taking time to reattach the ink cartridge will adversely affect the ink path.
- Even if you are not using the printer, shake the white ink cartridge 50 times (about 20 seconds) once a week.

Output Method

Printing Method

Preparations before Printing Output.....70
Checking the Daily Workflow.....70
Printing Tests and Normal Cleaning.....71
Printing Output.....73
Step 1: Batch Settings for Printing.....73
Step 2: Starting Output.....82

Preparations before Printing Output

Checking the Daily Workflow

This section explains the basic workflow of daily operations.

Performing appropriate maintenance at the correct times can help prevent malfunction as well as bring out the full potential of this machine.

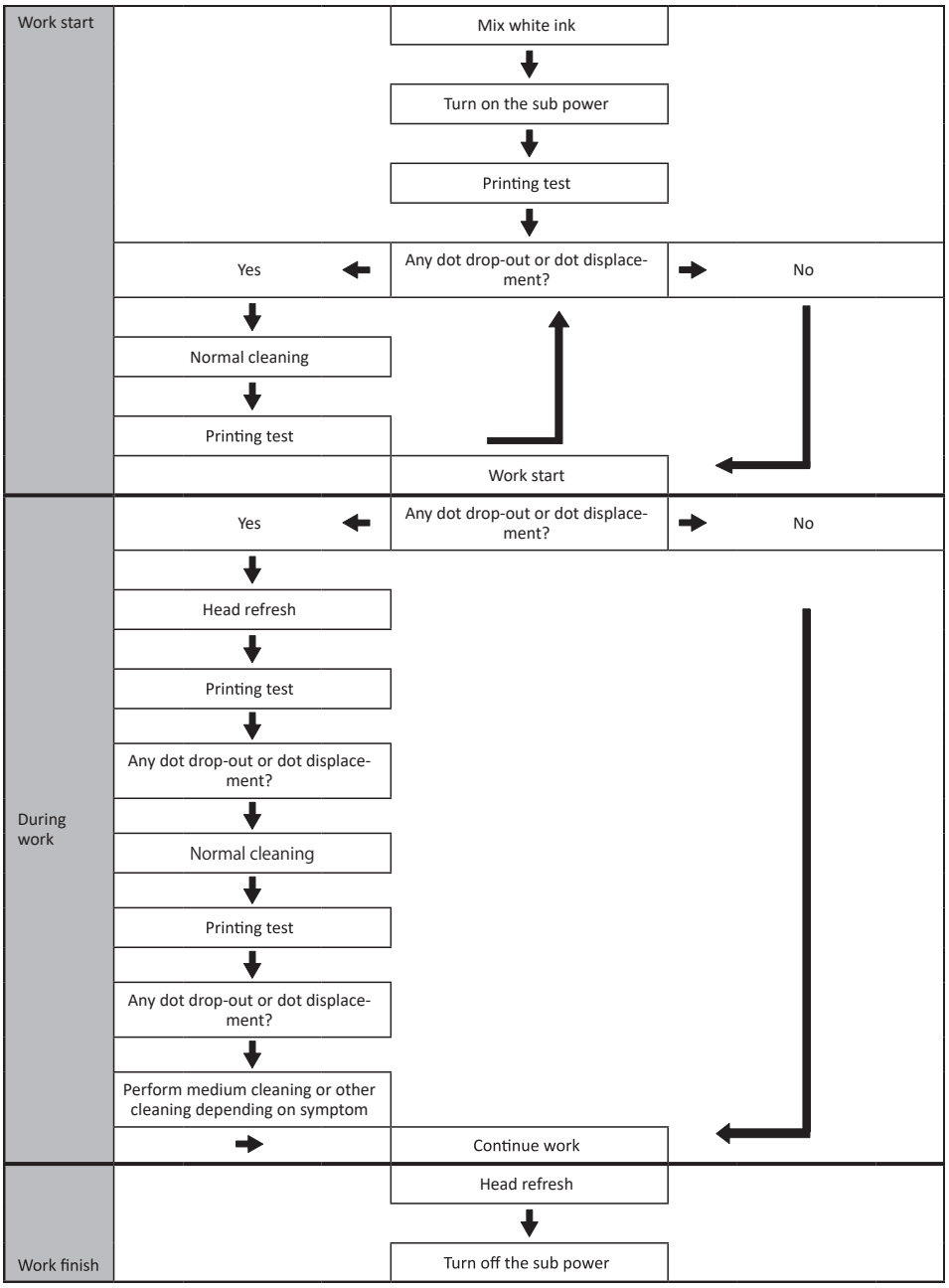

Printing Tests and Normal Cleaning

1. Perform a printing test.

Before you carry out actual printing, perform a printing test to ensure no dot drop-out or dot displacement occurs. If dot drop-out or dot displacement occurs, perform cleaning of the print heads (normal cleaning).

MEMO

- This operation is unnecessary if you will only perform cutting.
- When performing printing tests successively, you can select "FEED" (vertical printing) or "SCAN" (horizontal printing) as the print position for the second and later tests in comparison to the first test.

Procedure

1. **Load the media.**

   P. 30Setup of Media

2. **Press [FUNCTION].**

3. **Press [▼], then [▶] to display the screen shown below.**

4. **Press [ENTER].**

   Printing of the test pattern starts.

5. **Check whether there is dot drop-out or dot displacement in the test pattern.**

   Missing blocks indicate dot drop-out. Collapsed or inclined blocks indicate dot displacement.

   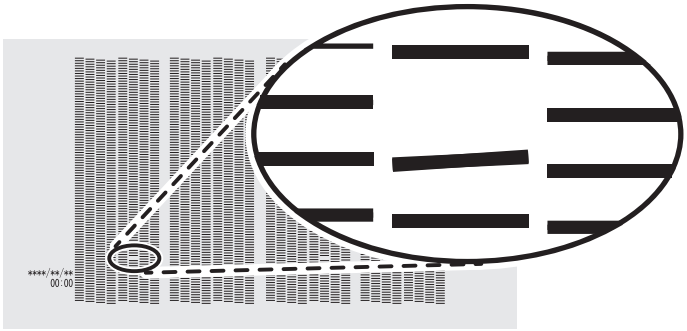

6. **If you have opened the front cover, close it.**

   If no dot drop-out or dot displacement occurs, this operation is finished. Press [FUNCTION] to go back to the original screen.

RELATED LINKS

- P. 203Performing Printing Tests Arranged Horizontally

2. Perform normal cleaning.

Procedure

1. **Press [▼] to display the following screen.**

2. **Press [ENTER].**

   The screen shown below appears, and then cleaning starts. The (approximate) remaining time for the procedure is displayed on the screen. (The display shown below is an example. "01:45" = "1 minute and 45 seconds")

   When finished, the screen shown below appears again.

3. **Press [▲].**

4. **Press [ENTER].**

   Perform a printing test again to check whether the dot drop-out and dot displacement have been corrected.

5. **Check to make sure the dot drop-out or dot displacement has been corrected.**

   If the problem persists, try performing normal cleaning again. If the printer has been used for a long period, dot drop-outs may not be fixed even after performing normal cleaning two or three times. If this is the case, clean using a different method.

RELATED LINKS

- P. 255When Normal Cleaning Is Not Effective

Printing Output

Step 1: Batch Settings for Printing

To ensure the optimal output according to the media size and type, you can configure various settings on this machine. However, it is hard work to configure these settings one at a time. You can use the "MEDIA SETTING" menu to configure the absolute minimum of necessary items as a batch. You can save the setting details as a preset.

Note that you can set all the items set here individually as well.

1. Start the "MEDIA SETTING" menu.

Procedure

1. **Load the media.**

   P. 30Setup of Media

   Check that the media is not sagging. If any sagging exists, settings such as the correction values will not function effectively.

2. **Press [MENU].**

3. **Press [ENTER].**

   If you want to cancel the batch settings before they are completed, see the following page.

RELATED LINKS

- P. 81Canceling Batch Settings before They Are Completed

2. Adjust the print head height.

Procedure

1. **Press [◀] to select "CHANGE".**

2. **Press [ENTER] to confirm your entry.**

You can select "NEXT" and press [ENTER] to skip the current menu and proceed to the next menu.

3. **When the following screen is displayed, open the front cover.**

4. **Move the height-adjustment lever to adjust the head height.**

When you change the position of the height-adjustment lever, the display screen changes and the buzzer sounds at the same time.

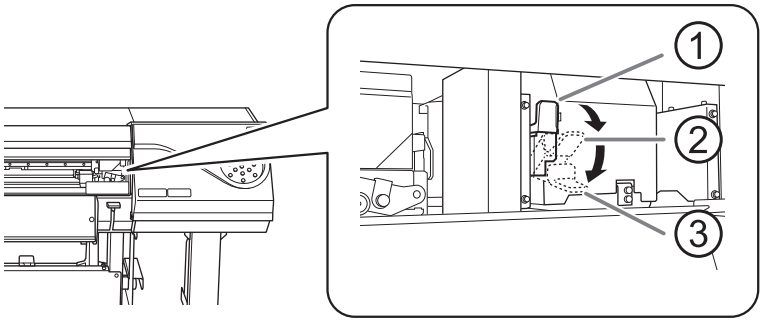

	Position	Display screen
①	"HIGH"	HEAD HEIGHT LOW ▸ HIGH
②	"LOW"	HEAD HEIGHT LOW ▸ LOW
③	"SpLOW"	HEAD HEIGHT LOW ▸ SpLOW

IMPORTANT

When you have moved the height-adjustment lever to "SpLOW", remove the media clamps.

MEMO

- Normally move the height-adjustment lever to "LOW". For media that is wrinkled or comes loose from the platen during printing, move the height-adjustment lever to "HIGH".
- The printing quality degrades as the distance between the media and the print heads increases. Do not move the height-adjustment lever to "HIGH" needlessly.

5. Close the front cover.

3. Perform position adjustment of the feed direction (reduce horizontal stripes).

Feed direction means the feed direction of the media. Perform the correction adjusting to the media in advance because horizontal strips are more likely to occur during printing when the movement distance of the media changes subtly depending on the media's thickness.

Procedure

1. **Press [◀] to select "SET".**

2. **Press [ENTER] to confirm your entry.**

   Printing of the test pattern starts.

   You can select "NEXT" and press [ENTER] to skip the current menu and proceed to the next menu.

3. **Press [ENTER].**

4. **View the printed test pattern, and then determine the correction value.**

   The current correction value (①) is that of the figure indicated by "▲." Select the value to make the gap (②) and overlap (③) between the upper/lower squares smallest (④). In the case of the following figure, select "-0.40." When you cannot choose between two sequential numbers, specify a value that is between them.

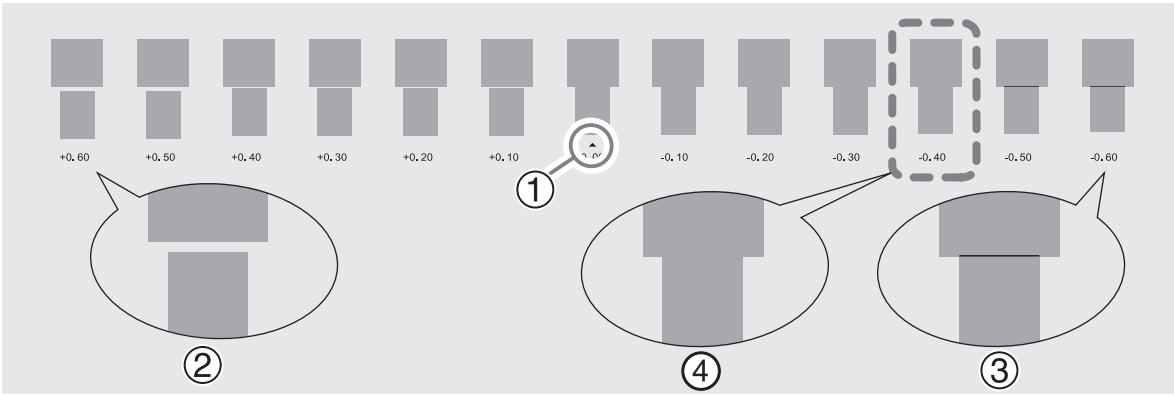

5. **Press [▲] or [▼] to select the correction value.**

6. **Press [ENTER] to confirm your entry.**

7. **Press [◀] to select "SET".**

8. **Press [ENTER] to confirm your entry.**

The test pattern is printed again. Check that the gap and overlap are the smallest for the figure indicated by "▲" (that is, the current correction value). If the gap and overlap are smaller for another figure, return to step 5. to perform the setting again.

If you do not need to change the correction value, press [ENTER] again.

9. **Press [▶] to select "DONE".**

10. **Press [ENTER] to confirm your entry.**

4. Adjust the misalignment of the ink landing position.

Procedure

1. **Press [◀] to select "SET".**

2. **Press [ENTER] to confirm your entry.**

   Printing of the test pattern starts.

   You can select "NEXT" and press [ENTER] to skip the current menu and proceed to the next menu.

3. **Press [ENTER].**

4. **View the printed test pattern, and then determine the correction value.**

   Select the value that gives the least misalignment between the two lines. In the case of the following figure, select "-3." When you cannot choose between two sequential numbers, select a value that is between them (you can set correction values in units of "0.5").

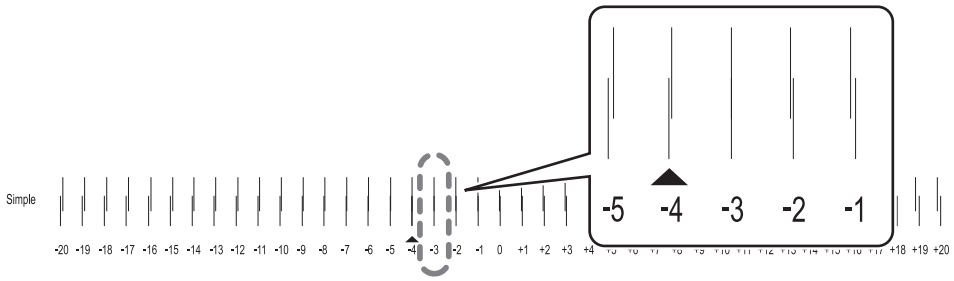

5. **Press [▲] or [▼] to select the correction value.**

6. **Press [ENTER] to confirm your entry.**

7. **Press [◀] to select "SET".**

8. **Press [ENTER] to confirm your entry.**

   The test pattern is printed again. Check that the misalignment is the smallest for the figure indicated by "▲" (that is, the current correction value). If the misalignment is smaller for another figure, return to step 5. to perform the setting again.

   If you do not need to change the correction value, press [ENTER] again.

9. **Press [▶] to select "DONE".**

10. Press [ENTER] to confirm your entry.

11. Press [▶] to select "NEXT".

12. Press [ENTER] to confirm your entry.

5. Save the settings as a preset.

Procedure

1. **Press [◀] to select "SAVE".**

2. **Press [ENTER] to confirm your entry.**

   If you select "NEXT" and press [ENTER], the screen in step 6 is displayed and the settings you have selected up to this point are not saved as a preset. However, they will remain as the current setting values for the machine.

3. **Press [▲] or [▼] to select a destination to save the preset.**

   You can select a name from "NAME1" to "NAME8".

4. **Press [ENTER] to confirm your entry.**

5. **Set the name.**

   (1) **Press [▲] or [▼] to select a character.**

   (2) **Press [▶] to move to the next character.**

   (3) **Set the following characters in the same way.**

   You can enter up to15 characters.

6. **Press [ENTER] to confirm your entry.**

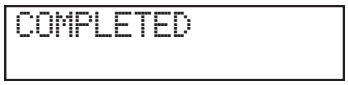

7. **Press [MENU] twice to go back to the original screen.**

   This completes the operation of the "MEDIA SETTING" menu.

Canceling Batch Settings before They Are Completed

Procedure

1. **Press [MENU] during setup.**

2. **Press [◀] to select "YES".**

3. **Press [ENTER] to confirm your entry.**

   The screen shown below appears again.

   Selecting "NO" in step 2 returns you to the screen that was displayed when you pressed [MENU].

> **MEMO**
>
> Even if you cancel media settings before they are completed, the values set so far will be saved.

Step 2: Starting Output

⚠ WARNING

Never touch the print-head carriage while output is in progress.
The print-head carriage moves at high speed. Coming into contact with the moving carriage may cause injury.

Procedure

1. **Before the start of daily operations, remove just the white ink cartridge, shake it 50 times (about 20 seconds), and then reinsert it.**

   So that the ink mixes well, shake the ink cartridge horizontally with a stroke length of around 5 cm (2 in.) from each end of the ink cartridge.

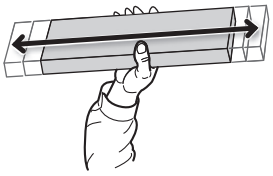

IMPORTANT

The ingredients in white ink tend to settle. The precipitation of the ingredients in the ink disables printing in normal color. Allowing the ink to stand can cause the settled material to harden, resulting in malfunction or other problems.

2. **Close the front cover.**

3. **Check that [SETUP] is lit.**

   If [SETUP] is not lit, the setup is not completed. Lower the loading lever, and then press [ENTER].

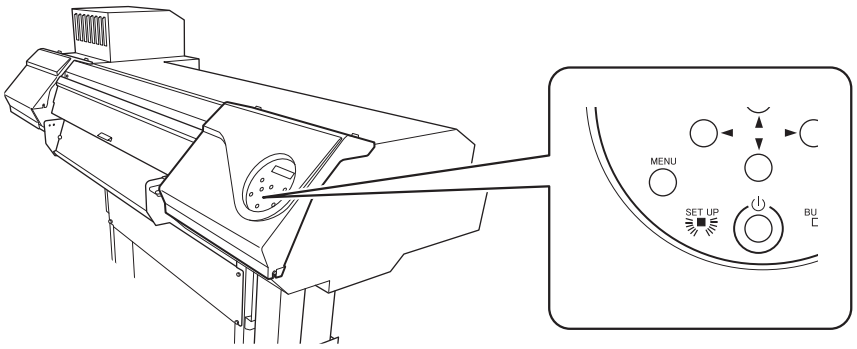

4. **Check that the screen shown below (the top menu) is displayed.**

   If the top menu is not displayed, press [MENU].

5. **Send the output data from the computer.**

   For information on how to create the output data, refer to the documentation for the software RIP.

MEMO

When you send the output data, "CLEANING..." may be displayed on the screen. These indicate the preparation operations performed before output. Output will begin after the time displayed on the screen elapses.

IMPORTANT

Output Is Not Possible in These Situations

- The machine does not run when a cover (front, left, right, or the rear UV shield) is open.
- Data from the computer is not accepted when [SETUP] is dark.
- Data from the computer is not accepted when you are not at the top menu.

Points that must be observed

- Do not open a cover (front, left, right, or the rear UV shield) while output is in progress. Doing so interrupts printing.
- When you are performing printing with the head height set to "HIGH" or "LOW", clamp the edges of the media with the media clamps. Otherwise, the edges of the media may warp and catch on the print heads.
- When the head height is set to "SpLOW", remove the media clamps.
- During output, do not touch the media. Doing so may obstruct the media feed or cause the media to rub against the print heads, which may result in a paper jam or damage to the heads.

When not using the machine, remove any media and store it in a suitable environment.

- Keep the loading lever raised when the machine is not in use.
- If the machine is left with the media loaded, the media may be damaged, which may adversely affect printing. When not using the machine, remove any media and store it in a suitable environment.

Cutting Method

Preparations before Cutting Output 85
Step 1: Preventing Pulling of the Media with Undue Force 85
Step 2: Adjusting Cutting 86
Cutting Output 88
Step 1: Batch Settings for Cutting 88
Step 2: Starting Output 93

Preparations before Cutting Output

Step 1: Preventing Pulling of the Media with Undue Force

Procedure

1. Press [MENU].
2. Press [▲] to display the following screen.

3. Press [▶] once, and then press [▲] several times to display the screen shown below.

4. Press [▶] to display the following screen.

5. Press [▲] or [▼] to select "ENABLE".

6. Press [ENTER] to confirm your entry.
7. Press [MENU] to return to the original screen.

MEMO

Default setting: "DISABLE"

Step 2: Adjusting Cutting

For high-quality cutting, we recommend carrying out a cutting test to check the cutting quality for the media before you perform actual cutting. Adjust the blade force depending on the cutting quality.

Procedure

1. **Close the front cover.**

2. **Press [◀] while the following screen is displayed.**
   The cutting carriage comes out over the platen.

3. **Press [◀], [▶], [▲], or [▼] to move the cutting carriage to the location where you want to carry out the cutting test.**
   You can freely set the location for the cutting test.

4. **Press [FUNCTION].**

5. **Press [▼] several times to display the following screen.**

6. **Press [▶] to display the following screen.**

7. **Press [ENTER].**
   The test pattern is cut.

8. **Peel off the cut shapes to verify the cutting quality.**

   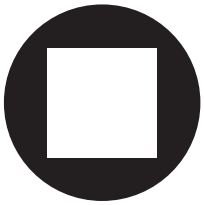

   - **Two shapes are peeled off separately**
     You do not need to perform the setting because the blade force is appropriate.
   - **Two shapes are peeled off together/backing paper is also cut**
     Proceed to the next step to set the blade force.

9. **Press [▼] to display the following screen.**

10. **Press [▶] to display the following screen.**

11. **Press [▲] or [▼] to select a value.**

- **Two shapes are peeled off together**

  Raise the blade force.
- **Backing paper is also cut**

  Reduce the blade force.

12. **Press [ENTER] to confirm your entry.**

13. **Press [◀], then [▲] to display the screen shown below.**

14. **Press [ENTER].**

The test pattern is cut.

15. **Check whether the correction was successful.**

In the "CUT SETTING" menu, you can also make settings for other cutting conditions in addition to the blade force. Refer to the following page.

RELATED LINKS

- P. 155Fine-tuning the Cutting Conditions

Cutting Output

Step 1: Batch Settings for Cutting

To ensure the optimal output according to the media size and type, you can configure various settings on this machine. However, it is hard work to configure these settings one at a time. You can use the "MEDIA SETTING" menu to configure the absolute minimum of necessary items as a batch. You can save the setting details as a preset.

Note that you can set all the items set here individually as well.

1. Start the "MEDIA SETTING" menu.

Procedure

1. **Load the media.**

   P. 30Setup of Media

   Check that the media is not sagging. If any sagging exists, settings such as the correction values will not function effectively.

2. **Press [MENU].**

3. **Press [ENTER].**

   If you want to cancel the batch settings before they are completed, see the following page.

RELATED LINKS

- P. 92Canceling Batch Settings before They Are Completed

2. Set the blade force.

For high-quality cutting, perform a cutting test to check the cutting quality for the media and adjust the blade force.

Procedure

1. **Press [▶] to select "NEXT".**

   HEAD HGT LOW ◀▶
   CHANGE [NEXT] ↵

2. **Press [ENTER] to confirm your entry.**

3. **Press [▶] to select "NEXT".**

   CALIBRATION ◀▶
   SET [NEXT] ↵

4. **Press [ENTER] to confirm your entry.**

5. **Press [▶] to select "NEXT".**

   MEDIA GAP ADJ. ◀▲▼
   [SET] NEXT ↵

6. **Press [ENTER] to confirm your entry.**

7. **Press [◀] to select "SET".**

   CUT CONFIG ◀▶
   [SET] NEXT ↵

8. **Press [ENTER] to confirm your entry.**

9. **Press [◀] to select "SET".**

   CUT FORCE ◀▶
   [SET] NEXT ↵

10. **Press [ENTER] to confirm your entry.**

    The test pattern is cut.

    You can select "NEXT" and press [ENTER] to skip the current menu and proceed to the next menu.

11. **Peel off the two cut shapes (a circle and a square).**

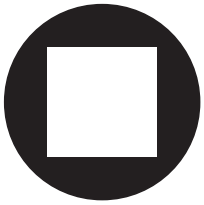

12. **Check how the two shapes peel off.**

- **Two shapes are peeled off together/backing paper is also cut**

  Press [◀] to select "SET".

- **Two shapes are peeled off separately**

  Press [▶] to select "DONE".

13. **Press [ENTER] to confirm your entry.**

- If you select "YES", proceed to the next procedure.
- If you select "DONE", proceed to step 3. Save the settings as a preset.(P. 91).

14. **Press [▲] or [▼] to adjust the blade force.**

- If the two shapes are peeled off together → increase the blade force.
- If the backing paper is also cut → reduce the blade force.

15. **Press [ENTER] to confirm your entry.**

The test pattern is cut again. Check the result.

16. **Check how the two shapes peel off.**

- **Two shapes are peeled off together/backing paper is also cut**

  Press [◀] to select "YES".

- **Two shapes are peeled off separately**

  Press [▶] to select "DONE".

17. **Press [ENTER] to confirm your entry.**

- If you select "YES", go back to step 14 and perform the setting again.
- If you select "DONE", proceed to step 3. Save the settings as a preset.(P. 91).

3. Save the settings as a preset.

Procedure

1. **Press [▶] to select "YES".**

2. **Press [ENTER] to confirm your entry.**

3. **Press [▶] to select "NEXT".**

4. **Press [ENTER] to confirm your entry.**

5. **Press [◀] to select "SAVE".**

6. **Press [ENTER] to confirm your entry.**

   If you select "NEXT" and press [ENTER], the screen in step 10 is displayed and the settings you have selected up to this point are not saved as a preset. However, they will remain as the current setting values for the machine.

7. **Press [▲] or [▼] to select a destination to save the preset.**

   You can select a name from "NAME1" to "NAME8".

8. **Press [ENTER] to confirm your entry.**

9. **Set the name.**

   (1) **Press [▲] or [▼] to select a character.**

   (2) **Press [▶] to move to the next character.**

   (3) **Set the following characters in the same way.**

   You can enter up to15 characters.

10. **Press [ENTER] to confirm your entry.**

11. **Press [MENU] twice to go back to the original screen.**

    This completes the operation of the "MEDIA SETTING" menu.

Canceling Batch Settings before They Are Completed

Procedure

1. **Press [MENU] during setup.**

2. **Press [◀] to select "YES".**

3. **Press [ENTER] to confirm your entry.**

   The screen shown below appears again.

   Selecting "NO" in step 2 returns you to the screen that was displayed when you pressed [MENU].

> **MEMO**
>
> Even if you cancel media settings before they are completed, the values set so far will be saved.

Step 2: Starting Output

⚠ WARNING

Never touch the print-head carriage while output is in progress.

The print-head carriage moves at high speed. Coming into contact with the moving carriage may cause injury.

Procedure

1. **Close the front cover.**

2. **Check that [SETUP] is lit.**

   If [SETUP] is not lit, the setup is not completed. Lower the loading lever, and then press [ENTER].

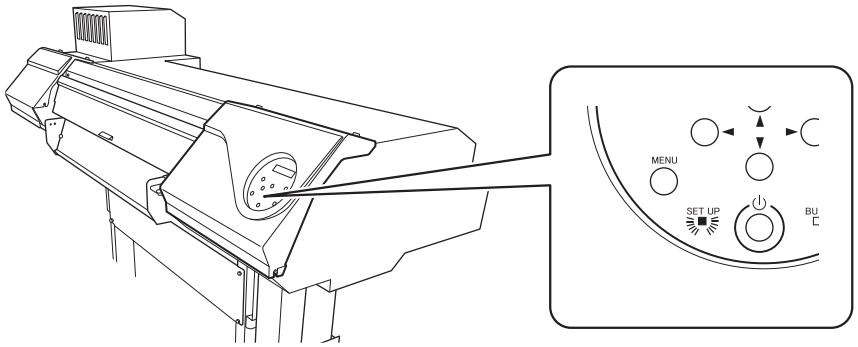

3. **Check that the screen shown below (the top menu) is displayed.**

   If the top menu is not displayed, press [MENU].

4. **Send the output data from the computer.**

   For information on how to create the output data, refer to the documentation for the software RIP.

IMPORTANT

Output Is Not Possible in These Situations

- The machine does not run when a cover (front, left, right, or the rear UV shield) is open.
- Data from the computer is not accepted when [SETUP] is dark.
- Data from the computer is not accepted when you are not at the top menu.

Points that must be observed

- Do not open a cover (front, left, right, or the rear UV shield) while output is in progress. Doing so interrupts printing.
- During output, do not touch the media. Doing so may obstruct the media feed or cause the media to rub against the print heads, which may result in a paper jam or damage to the heads.

When not using the machine, remove any media and store it in a suitable environment.

- Keep the loading lever raised when the machine is not in use.
- If the machine is left with the media loaded, the media may be damaged, which may adversely affect printing. When not using the machine, remove any media and store it in a suitable environment.

Printing and Cutting Method

Preparations before Printing and Cutting Output.....95
Step 1: Printing Tests and Normal Cleaning 95
Step 2: Adjusting Cutting 97
Printing and Cutting Output 99
Step 1: Batch Settings for Printing and Cutting.....99
Step 2: Starting Output..... 113

Preparations before Printing and Cutting Output

Step 1: Printing Tests and Normal Cleaning

1. Perform a printing test.

Before you carry out actual printing, perform a printing test to ensure no dot drop-out or dot displacement occurs. If dot drop-out or dot displacement occurs, perform cleaning of the print heads (normal cleaning).

MEMO

- This operation is unnecessary if you will only perform cutting.
- When performing printing tests successively, you can select "FEED" (vertical printing) or "SCAN" (horizontal printing) as the print position for the second and later tests in comparison to the first test.

Procedure

1. **Load the media.**

   P. 30Setup of Media

2. **Press [FUNCTION].**

3. **Press [▼], then [▶] to display the screen shown below.**

4. **Press [ENTER].**

   Printing of the test pattern starts.

5. **Check whether there is dot drop-out or dot displacement in the test pattern.**

   Missing blocks indicate dot drop-out. Collapsed or inclined blocks indicate dot displacement.

   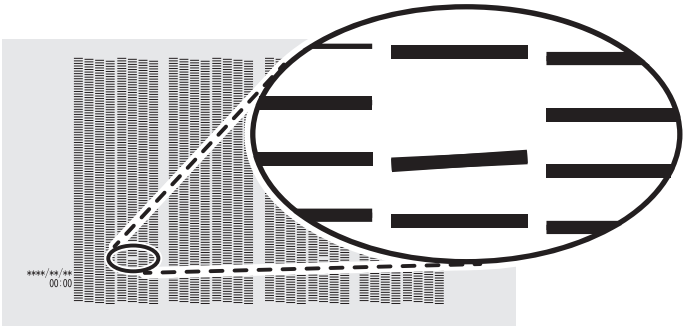

6. **If you have opened the front cover, close it.**

   If no dot drop-out or dot displacement occurs, this operation is finished. Press [FUNCTION] to go back to the original screen.

RELATED LINKS

- P. 203Performing Printing Tests Arranged Horizontally

2. Perform normal cleaning.

Procedure

1. **Press [▼] to display the following screen.**

2. **Press [ENTER].**

   The screen shown below appears, and then cleaning starts. The (approximate) remaining time for the procedure is displayed on the screen. (The display shown below is an example. "01:45" = "1 minute and 45 seconds")

   When finished, the screen shown below appears again.

3. **Press [▲].**

4. **Press [ENTER].**

   Perform a printing test again to check whether the dot drop-out and dot displacement have been corrected.

5. **Check to make sure the dot drop-out or dot displacement has been corrected.**

   If the problem persists, try performing normal cleaning again. If the printer has been used for a long period, dot drop-outs may not be fixed even after performing normal cleaning two or three times. If this is the case, clean using a different method.

RELATED LINKS

- P. 255When Normal Cleaning Is Not Effective

Step 2: Adjusting Cutting

For high-quality cutting, we recommend carrying out a cutting test to check the cutting quality for the media before you perform actual cutting. Adjust the blade force depending on the cutting quality.

Procedure

1. **Close the front cover.**

2. **Press [◀] while the following screen is displayed.**

   The cutting carriage comes out over the platen.

   ```
   W 1600mm
   ```

3. **Press [◀], [▶], [▲], or [▼] to move the cutting carriage to the location where you want to carry out the cutting test.**

   You can freely set the location for the cutting test.

4. **Press [FUNCTION].**

5. **Press [▼] several times to display the following screen.**

   ```
   FUNCTION      ◀▲▼
   CUT CONFIG      ▶
   ```

6. **Press [▶] to display the following screen.**

   ```
   CUT CONFIG    ◀▲▼
   TEST CUT        ↵
   ```

7. **Press [ENTER].**

   The test pattern is cut.

8. **Peel off the cut shapes to verify the cutting quality.**

   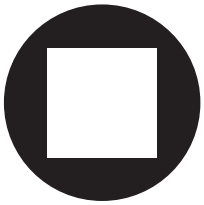

   - **Two shapes are peeled off separately**

     You do not need to perform the setting because the blade force is appropriate.
   - **Two shapes are peeled off together/backing paper is also cut**

     Proceed to the next step to set the blade force.

9. **Press [▼] to display the following screen.**

   ```
   CUT CONFIG    ◀▲▼
   FORCE           ▶
   ```

10. **Press [▶] to display the following screen.**

11. **Press [▲] or [▼] to select a value.**

- **Two shapes are peeled off together**

  Raise the blade force.
- **Backing paper is also cut**

  Reduce the blade force.

12. **Press [ENTER] to confirm your entry.**

13. **Press [◀], then [▲] to display the screen shown below.**

14. **Press [ENTER].**

The test pattern is cut.

15. **Check whether the correction was successful.**

In the "CUT SETTING" menu, you can also make settings for other cutting conditions in addition to the blade force. Refer to the following page.

RELATED LINKS

- P. 155Fine-tuning the Cutting Conditions

Printing and Cutting Output

Step 1: Batch Settings for Printing and Cutting

Note that you can set all the items set here individually as well.

1. Start the "MEDIA SETTING" menu.

Procedure

1. **Load the media.**

   P. 30Setup of Media

   Check that the media is not sagging. If any sagging exists, settings such as the correction values will not function effectively.

2. **Press [MENU].**

3. **Press [ENTER].**

   If you want to cancel the batch settings before they are completed, see the following page.

RELATED LINKS

- P. 112Canceling Batch Settings before They Are Completed

2. Adjust the print head height.

Procedure

1. **Press [◀] to select "CHANGE".**

2. **Press [ENTER] to confirm your entry.**

You can select "NEXT" and press [ENTER] to skip the current menu and proceed to the next menu.

3. **When the following screen is displayed, open the front cover.**

4. **Move the height-adjustment lever to adjust the head height.**

When you change the position of the height-adjustment lever, the display screen changes and the buzzer sounds at the same time.

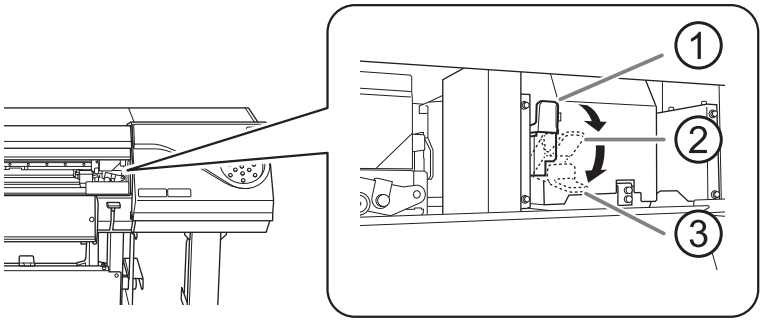

	Position	Display screen
①	"HIGH"	HEAD HEIGHT LOW ▸ HIGH
②	"LOW"	HEAD HEIGHT LOW ▸ LOW
③	"SpLOW"	HEAD HEIGHT LOW ▸ SpLOW

IMPORTANT

When you have moved the height-adjustment lever to "SpLOW", remove the media clamps.

MEMO

- Normally move the height-adjustment lever to "LOW". For media that is wrinkled or comes loose from the platen during printing, move the height-adjustment lever to "HIGH".
- The printing quality degrades as the distance between the media and the print heads increases. Do not move the height-adjustment lever to "HIGH" needlessly.

5. Close the front cover.

3. Perform position adjustment of the feed direction (reduce horizontal stripes).

Feed direction means the feed direction of the media. Perform the correction adjusting to the media in advance because horizontal strips are more likely to occur during printing when the movement distance of the media changes subtly depending on the media's thickness.

Procedure

1. **Press [◀] to select "SET".**

```
CALIBRATION    ◀▶
[SET]   NEXT    ↵
```

2. **Press [ENTER] to confirm your entry.**

Printing of the test pattern starts.

You can select "NEXT" and press [ENTER] to skip the current menu and proceed to the next menu.

3. **Press [ENTER].**

```
INPUT
   ADJ. VALUES ↵
```

4. **View the printed test pattern, and then determine the correction value.**

The current correction value (①) is that of the figure indicated by "▲." Select the value to make the gap (②) and overlap (③) between the upper/lower squares smallest (④). In the case of the following figure, select "-0.40." When you cannot choose between two sequential numbers, specify a value that is between them.

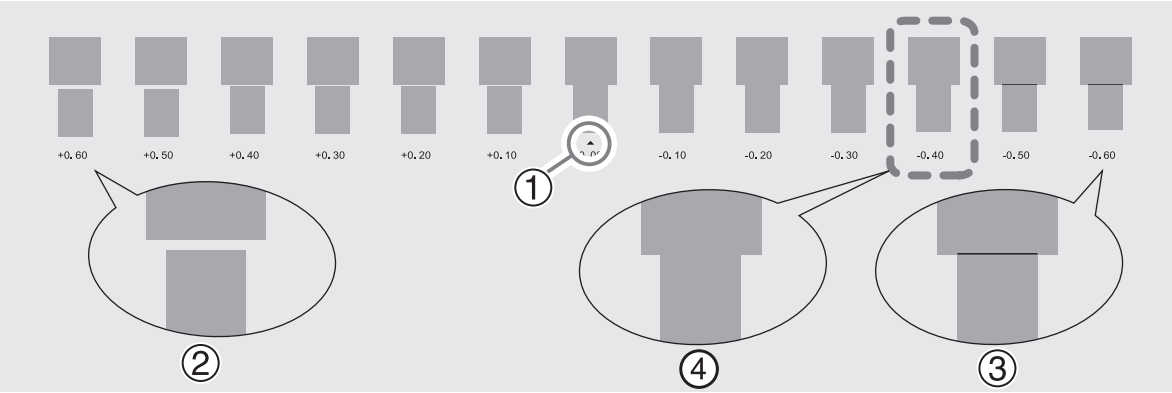

5. **Press [▲] or [▼] to select the correction value.**

```
CALIBRATION    ◆
 0.00% ▶+0.05% ↵
```

6. **Press [ENTER] to confirm your entry.**

7. **Press [◀] to select "SET".**

```
REDO ADJ.?     ◀▶
[YES]   DONE    ↵
```

8. **Press [ENTER] to confirm your entry.**

The test pattern is printed again. Check that the gap and overlap are the smallest for the figure indicated by "▲" (that is, the current correction value). If the gap and overlap are smaller for another figure, return to step 5. to perform the setting again.

If you do not need to change the correction value, press [ENTER] again.

9. **Press [▶] to select "DONE".**

10. **Press [ENTER] to confirm your entry.**

4. Adjust the misalignment of the ink landing position.

Procedure

1. **Press [◀] to select "SET".**

2. **Press [ENTER] to confirm your entry.**

   Printing of the test pattern starts.

   You can select "NEXT" and press [ENTER] to skip the current menu and proceed to the next menu.

3. **Press [ENTER].**

4. **View the printed test pattern, and then determine the correction value.**

   Select the value that gives the least misalignment between the two lines. In the case of the following figure, select "-3." When you cannot choose between two sequential numbers, select a value that is between them (you can set correction values in units of "0.5").

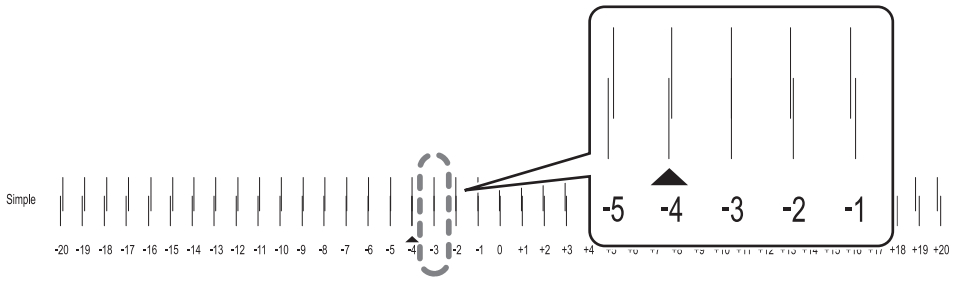

5. **Press [▲] or [▼] to select the correction value.**

6. **Press [ENTER] to confirm your entry.**

7. **Press [◀] to select "SET".**

8. **Press [ENTER] to confirm your entry.**

   The test pattern is printed again. Check that the misalignment is the smallest for the figure indicated by "▲" (that is, the current correction value). If the misalignment is smaller for another figure, return to step 5. to perform the setting again.

   If you do not need to change the correction value, press [ENTER] again.

9. **Press [▶] to select "DONE".**

10. Press [ENTER] to confirm your entry.

11. Press [▶] to select "NEXT".

12. Press [ENTER] to confirm your entry.

5. Set the blade force.

For high-quality cutting, perform a cutting test to check the cutting quality for the media and adjust the blade force.

Procedure

1. **Press [◀] to select "SET".**

2. **Press [ENTER] to confirm your entry.**

3. **Press [◀] to select "SET".**

4. **Press [ENTER] to confirm your entry.**

   The test pattern is cut.

   You can select "NEXT" and press [ENTER] to skip the current menu and proceed to the next menu.

5. **Peel off the two cut shapes (a circle and a square).**

   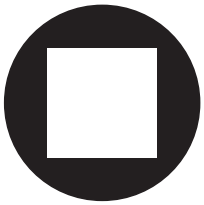

6. **Check how the two shapes peel off.**

   - **Two shapes are peeled off together/backing paper is also cut**

     Press [◀] to select "SET".

   - **Two shapes are peeled off separately**

     Press [▶] to select "DONE".

7. **Press [ENTER] to confirm your entry.**

   - If you select "YES", proceed to the next procedure.
   - If you select "DONE", proceed to step 6. Correcting the Misalignment of the Printing and Cutting Positions(P. 108).

8. **Press [▲] or [▼] to adjust the blade force.**

   - If the two shapes are peeled off together → increase the blade force.

- If the backing paper is also cut → reduce the blade force.

9. **Press [ENTER] to confirm your entry.**

The test pattern is cut again. Check the result.

10. **Check how the two shapes peel off.**

- **Two shapes are peeled off together/backing paper is also cut**

  Press [◀] to select "YES".

- **Two shapes are peeled off separately**

  Press [▶] to select "DONE".

11. **Press [ENTER] to confirm your entry.**

- If you select "YES", go back to step 8 and perform the setting again.
- If you select "DONE", proceed to step 6. Correcting the Misalignment of the Printing and Cutting Positions(P. 108).

6. Correcting the Misalignment of the Printing and Cutting Positions

Subtle misalignment between the printing and cutting positions may occur due to the thickness of the media or the head height. We recommend that you make corrections to match the media you are using.

Procedure

1. **Press [◀] to select "SET".**

```
PRINT-CUT ADJ.◀▶
[SET] NEXT      ↵
```

2. **Press [ENTER] to confirm your entry.**

The test pattern (P&C1) is printed and cut. The test pattern is printed at each edge of the media.

You can select "NEXT" and press [ENTER] to skip the current menu and proceed to the next menu.

MEMO

If the media is tilted, the positions at the edges will be misaligned. You can also adjust for misalignments due to the media being tilted by printing the test pattern at each edge.

3. **Check the test pattern (P&C1).**

Check whether the printing position (shaded part) and the cutting position (outer frame) are aligned. An example of the printing position and the cutting position being misaligned is shown in the following figure.

"F" indicates the feed direction of the media (the feed direction) and "S" indicates the direction of print head movement (the scan direction).

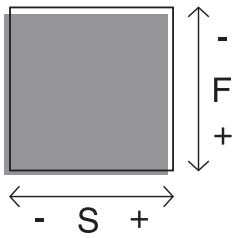

4. **Determine whether to correct the misalignment.**

- **Cutting position and printing position are not aligned**

  Press [◀] to select "YES".

```
CONTINUE ADJ.?◀▶
[YES] DONE      ↵
```

- **Cutting position and printing position are aligned**

  Press [▶] to select "DONE".

```
CONTINUE ADJ.?◀▶
 YES [DONE]     ↵
```

5. **Press [ENTER] to confirm your entry.**

- If you select "YES", the test pattern (P&C2) for setting the correction values is printed and cut. Proceed to the next step.
- If you select "DONE", proceed to step 11.

6. **Press [ENTER].**

7. **Check the correction values from the test pattern (P&C2) condition.**

The point where the cutting line (①) intersects the correction-value scale (②) is the correction value. In the following figure, the correction value is "−0.3."

Check the media feed direction (the feed direction) and the direction of print head movement (the scan direction).

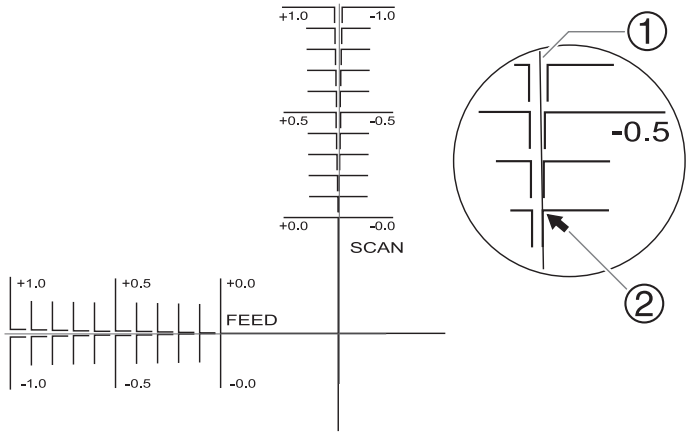

8. **Set the correction values for the feed direction "F" and scan direction "S".**

(1) **Press [▲] or [▼] to set the correction value for the feed direction "F".**

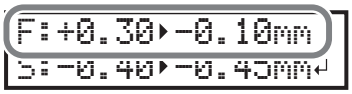

(2) **Press [◀] or [▶] to set the correction value for the scan direction "S".**

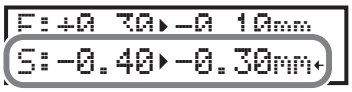

(3) **When you have finished setting the correction values, press [ENTER].**

The test pattern (P&C1) is printed and cut again. Check the condition of the test pattern to check whether the printing position and the cutting position are aligned.

9. **Determine whether to correct the misalignment.**

- **Cutting position and printing position are not aligned**

  Press [◀] to select "YES".

- **Cutting position and printing position are aligned**

  Press [▶] to select "DONE".

10. **Press [ENTER] to confirm your entry.**

- If you select [YES], go back to step 8 and perform the setting again.

- If you select "DONE", proceed to the next procedure.

11. **Press [▶] to select "NEXT".**

12. **Press [ENTER] to confirm your entry.**

7. Save the settings as a preset.

Procedure

1. **Press [◀] to select "SAVE".**

2. **Press [ENTER] to confirm your entry.**

   If you select "NEXT" and press [ENTER], the screen in step 6 is displayed and the settings you have selected up to this point are not saved as a preset. However, they will remain as the current setting values for the machine.

3. **Press [▲] or [▼] to select a destination to save the preset.**

   You can select a name from "NAME1" to "NAME8".

4. **Press [ENTER] to confirm your entry.**

5. **Set the name.**

   (1) **Press [▲] or [▼] to select a character.**

   (2) **Press [▶] to move to the next character.**

   (3) **Set the following characters in the same way.**

   You can enter up to15 characters.

6. **Press [ENTER] to confirm your entry.**

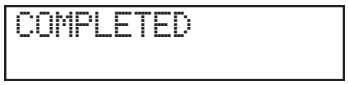

7. **Press [MENU] twice to go back to the original screen.**

   This completes the operation of the "MEDIA SETTING" menu.

Canceling Batch Settings before They Are Completed

Procedure

1. **Press [MENU] during setup.**

2. **Press [◀] to select "YES".**

3. **Press [ENTER] to confirm your entry.**

   The screen shown below appears again.

   Selecting "NO" in step 2 returns you to the screen that was displayed when you pressed [MENU].

> **MEMO**
>
> Even if you cancel media settings before they are completed, the values set so far will be saved.

Step 2: Starting Output

⚠ WARNING

Never touch the print-head carriage while output is in progress.

The print-head carriage moves at high speed. Coming into contact with the moving carriage may cause injury.

Procedure

1. **Before the start of daily operations, remove just the white ink cartridge, shake it 50 times (about 20 seconds), and then reinsert it.**

   So that the ink mixes well, shake the ink cartridge horizontally with a stroke length of around 5 cm (2 in.) from each end of the ink cartridge.

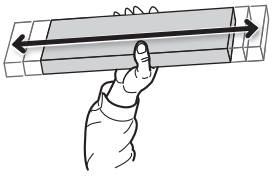

IMPORTANT

The ingredients in white ink tend to settle. The precipitation of the ingredients in the ink disables printing in normal color. Allowing the ink to stand can cause the settled material to harden, resulting in malfunction or other problems.

2. **Close the front cover.**

3. **Check that [SETUP] is lit.**

   If [SETUP] is not lit, the setup is not completed. Lower the loading lever, and then press [ENTER].

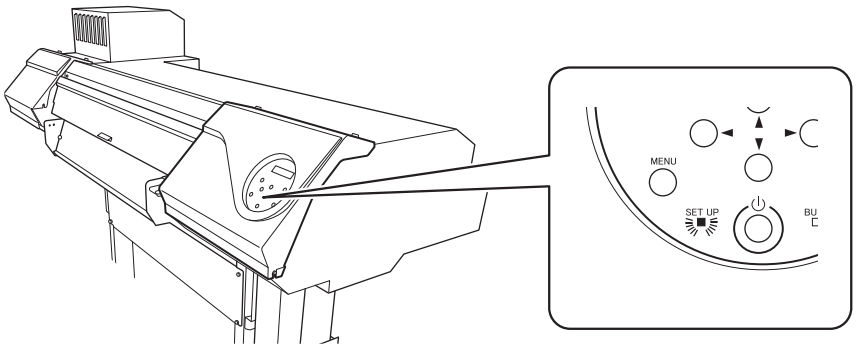

4. **Check that the screen shown below (the top menu) is displayed.**

   If the top menu is not displayed, press [MENU].

5. **Send the output data from the computer.**

   For information on how to create the output data, refer to the documentation for the software RIP.

MEMO

When you send the output data, "CLEANING..." may be displayed on the screen. These indicate the preparation operations performed before output. Output will begin after the time displayed on the screen elapses.

IMPORTANT

Output Is Not Possible in These Situations

- The machine does not run when a cover (front, left, right, or the rear UV shield) is open.
- Data from the computer is not accepted when [SETUP] is dark.
- Data from the computer is not accepted when you are not at the top menu.

Points that must be observed

- Do not open a cover (front, left, right, or the rear UV shield) while output is in progress. Doing so interrupts printing.
- When you are performing printing with the head height set to "HIGH" or "LOW", clamp the edges of the media with the media clamps. Otherwise, the edges of the media may warp and catch on the print heads.
- When the head height is set to "SpLOW", remove the media clamps.
- During output, do not touch the media. Doing so may obstruct the media feed or cause the media to rub against the print heads, which may result in a paper jam or damage to the heads.

When not using the machine, remove any media and store it in a suitable environment.

- Keep the loading lever raised when the machine is not in use.
- If the machine is left with the media loaded, the media may be damaged, which may adversely affect printing. When not using the machine, remove any media and store it in a suitable environment.

How to Cut with Crop Marks

Preparations before Cutting with Crop Marks 116
What Is Cutting with Crop Marks? 116
Step 1: Printing Tests and Normal Cleaning 117
Step 2: Adjusting Cutting 119
Cutting with Crop Marks 121
Step 1: Batch Settings for Cutting with Crop Marks 121
Step 2: Starting Output with Crop Marks 135
Step 3: Preparations for Cutting Output 137
Step 4: Starting Cutting Output 141

Preparations before Cutting with Crop Marks

What Is Cutting with Crop Marks?

If you are removing the printed media and loading it again in order to cut it (for example, if you are processing the media such as laminating after printing, and then loading this media again for cutting), you have to align the printing and cutting positions. By printing the data together with crop marks, you can make it possible to align the positions using the crop marks when you load the media again to cut it. In this manual, this printing method is referred to as "cutting with crop marks."

"Crop marks" are marks used to align positions. They are also called "alignment marks."

Step 1: Printing Tests and Normal Cleaning

1. Perform a printing test.

Before you carry out actual printing, perform a printing test to ensure no dot drop-out or dot displacement occurs. If dot drop-out or dot displacement occurs, perform cleaning of the print heads (normal cleaning).

MEMO

- This operation is unnecessary if you will only perform cutting.
- When performing printing tests successively, you can select "FEED" (vertical printing) or "SCAN" (horizontal printing) as the print position for the second and later tests in comparison to the first test.

Procedure

1. **Load the media.**

   P. 30Setup of Media

2. **Press [FUNCTION].**

3. **Press [▼], then [▶] to display the screen shown below.**

4. **Press [ENTER].**

   Printing of the test pattern starts.

5. **Check whether there is dot drop-out or dot displacement in the test pattern.**

   Missing blocks indicate dot drop-out. Collapsed or inclined blocks indicate dot displacement.

   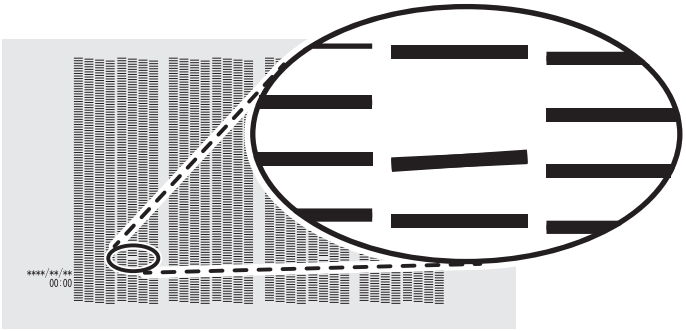

6. **If you have opened the front cover, close it.**

   If no dot drop-out or dot displacement occurs, this operation is finished. Press [FUNCTION] to go back to the original screen.

RELATED LINKS

- P. 203Performing Printing Tests Arranged Horizontally

2. Perform normal cleaning.

Procedure

1. **Press [▼] to display the following screen.**

2. **Press [ENTER].**

   The screen shown below appears, and then cleaning starts. The (approximate) remaining time for the procedure is displayed on the screen. (The display shown below is an example. "01:45" = "1 minute and 45 seconds")

   When finished, the screen shown below appears again.

3. **Press [▲].**

4. **Press [ENTER].**

   Perform a printing test again to check whether the dot drop-out and dot displacement have been corrected.

5. **Check to make sure the dot drop-out or dot displacement has been corrected.**

   If the problem persists, try performing normal cleaning again. If the printer has been used for a long period, dot drop-outs may not be fixed even after performing normal cleaning two or three times. If this is the case, clean using a different method.

RELATED LINKS

- P. 255When Normal Cleaning Is Not Effective

Step 2: Adjusting Cutting

For high-quality cutting, we recommend carrying out a cutting test to check the cutting quality for the media before you perform actual cutting. Adjust the blade force depending on the cutting quality.

Procedure

1. **Close the front cover.**

2. **Press [◀] while the following screen is displayed.**
   The cutting carriage comes out over the platen.

3. **Press [◀], [▶], [▲], or [▼] to move the cutting carriage to the location where you want to carry out the cutting test.**
   You can freely set the location for the cutting test.

4. **Press [FUNCTION].**

5. **Press [▼] several times to display the following screen.**

6. **Press [▶] to display the following screen.**

7. **Press [ENTER].**
   The test pattern is cut.

8. **Peel off the cut shapes to verify the cutting quality.**

   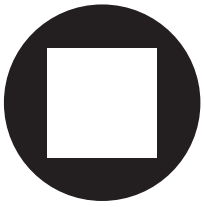

   - **Two shapes are peeled off separately**
     You do not need to perform the setting because the blade force is appropriate.
   - **Two shapes are peeled off together/backing paper is also cut**
     Proceed to the next step to set the blade force.

9. **Press [▼] to display the following screen.**

10. **Press [▶] to display the following screen.**

11. **Press [▲] or [▼] to select a value.**

- **Two shapes are peeled off together**

  Raise the blade force.
- **Backing paper is also cut**

  Reduce the blade force.

12. **Press [ENTER] to confirm your entry.**

13. **Press [◀], then [▲] to display the screen shown below.**

14. **Press [ENTER].**

The test pattern is cut.

15. **Check whether the correction was successful.**

In the "CUT SETTING" menu, you can also make settings for other cutting conditions in addition to the blade force. Refer to the following page.

RELATED LINKS

- P. 155Fine-tuning the Cutting Conditions

Cutting with Crop Marks

Step 1: Batch Settings for Cutting with Crop Marks

To ensure the optimal output according to the media size and type, you can configure various settings on this machine. However, it is hard work to configure these settings one at a time. You can use the "MEDIA SETTING" menu to configure the absolute minimum of necessary items as a batch. You can save the setting details as a preset.

Note that you can set all the items set here individually as well.

1. Start the "MEDIA SETTING" menu.

Procedure

1. **Load the media.**

   P. 30Setup of Media

   Check that the media is not sagging. If any sagging exists, settings such as the correction values will not function effectively.

2. **Press [MENU].**

3. **Press [ENTER].**

   If you want to cancel the batch settings before they are completed, see the following page.

RELATED LINKS

- P. 134Canceling Batch Settings before They Are Completed

2. Adjust the print head height.

Procedure

1. **Press [◀] to select "CHANGE".**

2. **Press [ENTER] to confirm your entry.**

You can select "NEXT" and press [ENTER] to skip the current menu and proceed to the next menu.

3. **When the following screen is displayed, open the front cover.**

4. **Move the height-adjustment lever to adjust the head height.**

When you change the position of the height-adjustment lever, the display screen changes and the buzzer sounds at the same time.

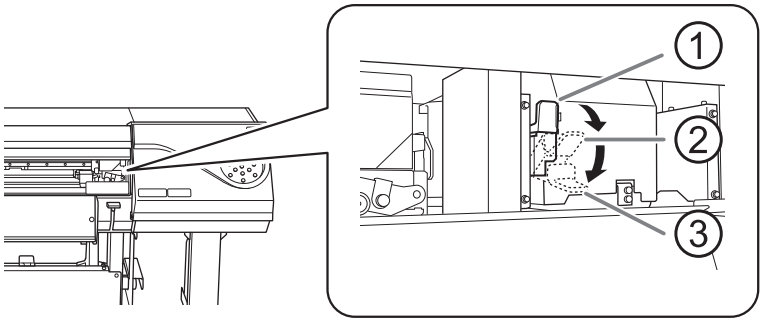

	Position	Display screen
①	"HIGH"	HEAD HEIGHT LOW ▸ HIGH
②	"LOW"	HEAD HEIGHT LOW ▸ LOW
③	"SpLOW"	HEAD HEIGHT LOW ▸ SpLOW

IMPORTANT

When you have moved the height-adjustment lever to "SpLOW", remove the media clamps.

MEMO

- Normally move the height-adjustment lever to "LOW". For media that is wrinkled or comes loose from the platen during printing, move the height-adjustment lever to "HIGH".
- The printing quality degrades as the distance between the media and the print heads increases. Do not move the height-adjustment lever to "HIGH" needlessly.

5. Close the front cover.

3. Perform position adjustment of the feed direction (reduce horizontal stripes).

Feed direction means the feed direction of the media. Perform the correction adjusting to the media in advance because horizontal strips are more likely to occur during printing when the movement distance of the media changes subtly depending on the media's thickness.

Procedure

1. **Press [◀] to select "SET".**

2. **Press [ENTER] to confirm your entry.**

   Printing of the test pattern starts.

   You can select "NEXT" and press [ENTER] to skip the current menu and proceed to the next menu.

3. **Press [ENTER].**

4. **View the printed test pattern, and then determine the correction value.**

   The current correction value (①) is that of the figure indicated by "▲." Select the value to make the gap (②) and overlap (③) between the upper/lower squares smallest (④). In the case of the following figure, select "-0.40." When you cannot choose between two sequential numbers, specify a value that is between them.

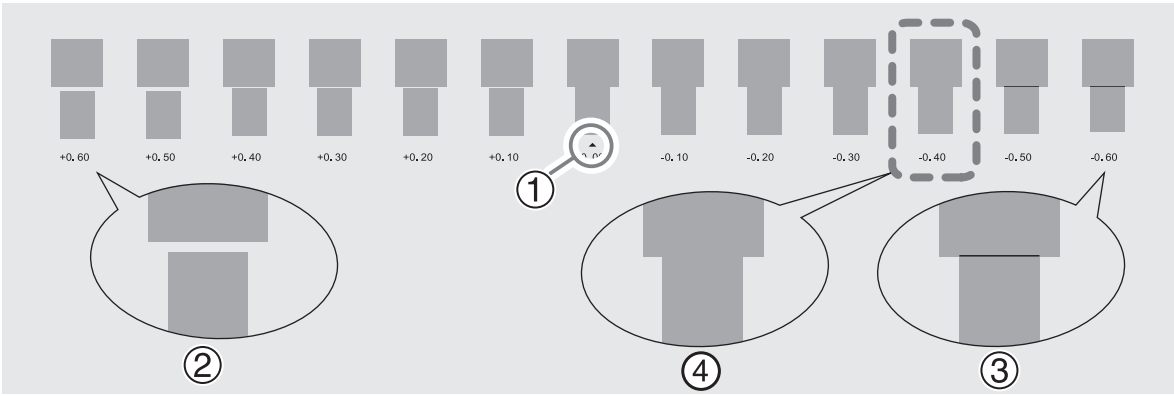

5. **Press [▲] or [▼] to select the correction value.**

6. **Press [ENTER] to confirm your entry.**

7. **Press [◀] to select "SET".**

8. **Press [ENTER] to confirm your entry.**

The test pattern is printed again. Check that the gap and overlap are the smallest for the figure indicated by "▲" (that is, the current correction value). If the gap and overlap are smaller for another figure, return to step 5. to perform the setting again.

If you do not need to change the correction value, press [ENTER] again.

9. **Press [▶] to select "DONE".**

10. **Press [ENTER] to confirm your entry.**

4. Adjust the misalignment of the ink landing position.

Procedure

1. **Press [◀] to select "SET".**

2. **Press [ENTER] to confirm your entry.**

   Printing of the test pattern starts.

   You can select "NEXT" and press [ENTER] to skip the current menu and proceed to the next menu.

3. **Press [ENTER].**

4. **View the printed test pattern, and then determine the correction value.**

   Select the value that gives the least misalignment between the two lines. In the case of the following figure, select "-3." When you cannot choose between two sequential numbers, select a value that is between them (you can set correction values in units of "0.5").

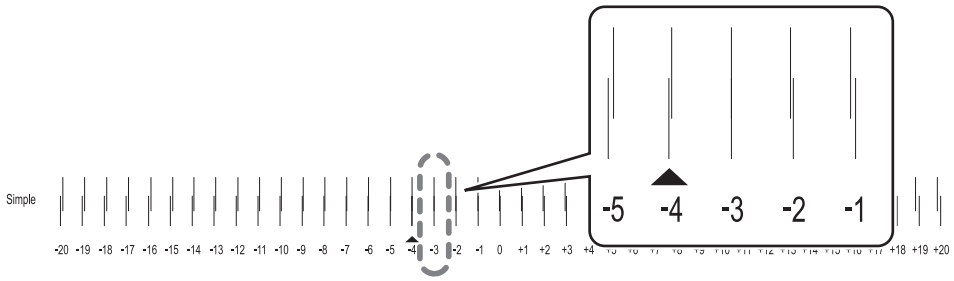

5. **Press [▲] or [▼] to select the correction value.**

6. **Press [ENTER] to confirm your entry.**

7. **Press [◀] to select "SET".**

8. **Press [ENTER] to confirm your entry.**

   The test pattern is printed again. Check that the misalignment is the smallest for the figure indicated by "▲" (that is, the current correction value). If the misalignment is smaller for another figure, return to step 5. to perform the setting again.

   If you do not need to change the correction value, press [ENTER] again.

9. **Press [▶] to select "DONE".**

10. Press [ENTER] to confirm your entry.

11. Press [▶] to select "NEXT".

12. Press [ENTER] to confirm your entry.

5. Set the blade force.

For high-quality cutting, perform a cutting test to check the cutting quality for the media and adjust the blade force.

Procedure

1. **Press [◀] to select "SET".**

2. **Press [ENTER] to confirm your entry.**

3. **Press [◀] to select "SET".**

4. **Press [ENTER] to confirm your entry.**

   The test pattern is cut.

   You can select "NEXT" and press [ENTER] to skip the current menu and proceed to the next menu.

5. **Peel off the two cut shapes (a circle and a square).**

   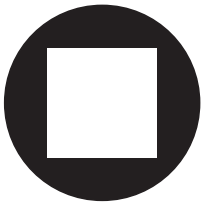

6. **Check how the two shapes peel off.**

   - **Two shapes are peeled off together/backing paper is also cut**

     Press [◀] to select "SET".

   - **Two shapes are peeled off separately**

     Press [▶] to select "DONE".

7. **Press [ENTER] to confirm your entry.**

   - If you select "YES", proceed to the next procedure.
   - If you select "DONE", proceed to step 6. Correct the misalignment of the printing and cutting positions when using crop marks.(P. 130).

8. **Press [▲] or [▼] to adjust the blade force.**

   - If the two shapes are peeled off together → increase the blade force.

- If the backing paper is also cut → reduce the blade force.

9. **Press [ENTER] to confirm your entry.**

The test pattern is cut again. Check the result.

10. **Check how the two shapes peel off.**

- **Two shapes are peeled off together/backing paper is also cut**

  Press [◀] to select "YES".

- **Two shapes are peeled off separately**

  Press [▶] to select "DONE".

11. **Press [ENTER] to confirm your entry.**

- If you select "YES", go back to step 8 and perform the setting again.
- If you select "DONE", proceed to step 6. Correct the misalignment of the printing and cutting positions when using crop marks.(P. 130).

6. Correct the misalignment of the printing and cutting positions when using crop marks.

When you remove the printed media, and then reload it and perform cutting, use the crop marks. For this case, correction is to be performed because the positioning of printing and cutting may be misaligned even when you are using crop marks depending on the composition of the media.

Procedure

1. **Press [▶] to select "YES".**

2. **Press [ENTER] to confirm your entry.**

3. **Press [◀] or [▶] to select "NEXT" or "SET".**

   Select "NEXT" when you will not print crop marks. Select "SET" when you will print crop marks.

4. **Press [ENTER] to confirm your entry.**

   If you select "SET", the test pattern (C&C1) is printed and cut. Proceed to the next step.

   If you select "NEXT", proceed to step 7. Save the settings as a preset.(P. 133).

5. **Check the test pattern (C&C1) condition.**

   Check whether the printing position (shaded part) and the cutting position (outer frame) are aligned. An example of the printing position and the cutting position being misaligned is shown in the following figure.

   "F" indicates the feed direction of the media (the feed direction) and "S" indicates the direction of print head movement (the scan direction).

   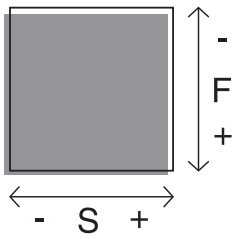

6. **Determine whether to correct the misalignment.**

   - **Cutting position and printing position are not aligned**

     Press [◀] to select "YES".

   - **Cutting position and printing position are aligned**

     Press [▶] to select "DONE".

7. **Press [ENTER] to confirm your entry.**

- If you select "YES", the test pattern (C&C2) for setting the correction values is printed and cut. Proceed to the next step.
- If you select "DONE", proceed to step 7. Save the settings as a preset.(P. 133).

8. **Press [ENTER].**

9. **Check the correction values from the test pattern (C&C2) condition.**

The point where the cutting line (①) intersects the correction-value scale (②) is the correction value. In the following figure, the correction value is "–0.3."

Check the media feed direction (the feed direction) and the direction of print head movement (the scan direction).

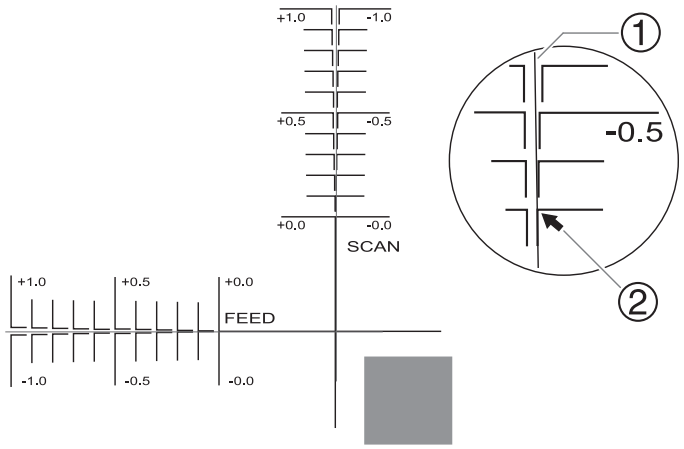

10. **Set the correction values for the feed direction "F" and scan direction "S".**

(1) **Press [▲] or [▼] to set the correction value for the feed direction "F".**

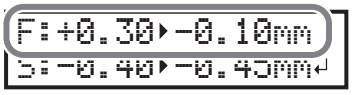

(2) **Press [◀] or [▶] to set the correction value for the scan direction "S".**

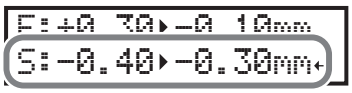

(3) **When you have finished setting the correction values, press [ENTER].**

The test pattern (C&C1) is printed and cut again. Check the condition of the test pattern to check whether the printing position and the cutting position are aligned.

11. **Determine whether to correct the misalignment.**

- **Cutting position and printing position are not aligned**

  Press [◀] to select "YES".

- **Cutting position and printing position are aligned**

  Press [▶] to select "DONE".

12. **Press [ENTER] to confirm your entry.**

- If you select "SET", go back to step 10 and perform the setting again.
  If you select "DONE", proceed to the next procedure.

7. Save the settings as a preset.

Procedure

1. **Press [◀] to select "SAVE".**

2. **Press [ENTER] to confirm your entry.**

   If you select "NEXT" and press [ENTER], the screen in step 6 is displayed and the settings you have selected up to this point are not saved as a preset. However, they will remain as the current setting values for the machine.

3. **Press [▲] or [▼] to select a destination to save the preset.**

   You can select a name from "NAME1" to "NAME8".

4. **Press [ENTER] to confirm your entry.**

5. **Set the name.**

   (1) **Press [▲] or [▼] to select a character.**

   (2) **Press [▶] to move to the next character.**

   (3) **Set the following characters in the same way.**

   You can enter up to15 characters.

6. **Press [ENTER] to confirm your entry.**

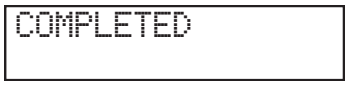

7. **Press [MENU] twice to go back to the original screen.**

   This completes the operation of the "MEDIA SETTING" menu.

Canceling Batch Settings before They Are Completed

Procedure

1. **Press [MENU] during setup.**

2. **Press [◀] to select "YES".**

3. **Press [ENTER] to confirm your entry.**

   The screen shown below appears again.

   Selecting "NO" in step 2 returns you to the screen that was displayed when you pressed [MENU].

MEMO

Even if you cancel media settings before they are completed, the values set so far will be saved.

Step 2: Starting Output with Crop Marks

⚠ WARNING

Never touch the print-head carriage while output is in progress.

The print-head carriage moves at high speed. Coming into contact with the moving carriage may cause injury.

Procedure

1. **Before the start of daily operations, remove just the white ink cartridge, shake it 50 times (about 20 seconds), and then reinsert it.**

   So that the ink mixes well, shake the ink cartridge horizontally with a stroke length of around 5 cm (2 in.) from each end of the ink cartridge.

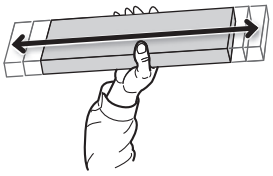

IMPORTANT

The ingredients in white ink tend to settle. The precipitation of the ingredients in the ink disables printing in normal color. Allowing the ink to stand can cause the settled material to harden, resulting in malfunction or other problems.

2. **Close the front cover.**

3. **Check that [SETUP] is lit.**

   If [SETUP] is not lit, the setup is not completed. Lower the loading lever, and then press [ENTER].

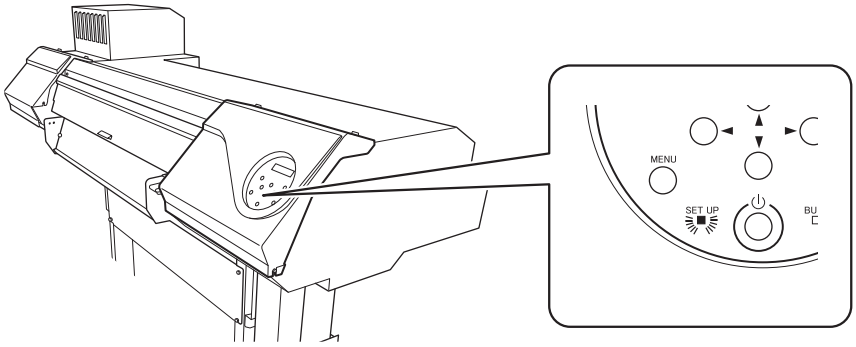

4. **Check that the screen shown below (the top menu) is displayed.**

   If the top menu is not displayed, press [MENU].

5. **Send the output data from the computer.**

   For information on how to create the output data, refer to the documentation for the software RIP.

MEMO

When you send the output data, "CLEANING..." may be displayed on the screen. These indicate the preparation operations performed before output. Output will begin after the time displayed on the screen elapses.

IMPORTANT

Output Is Not Possible in These Situations

- The machine does not run when a cover (front, left, right, or the rear UV shield) is open.
- Data from the computer is not accepted when [SETUP] is dark.
- Data from the computer is not accepted when you are not at the top menu.

Points that must be observed

- Do not open a cover (front, left, right, or the rear UV shield) while output is in progress. Doing so interrupts printing.
- When you are performing printing with the head height set to "HIGH" or "LOW", clamp the edges of the media with the media clamps. Otherwise, the edges of the media may warp and catch on the print heads.
- When the head height is set to "SpLOW", remove the media clamps.
- During output, do not touch the media. Doing so may obstruct the media feed or cause the media to rub against the print heads, which may result in a paper jam or damage to the heads.

When not using the machine, remove any media and store it in a suitable environment.

- Keep the loading lever raised when the machine is not in use.
- If the machine is left with the media loaded, the media may be damaged, which may adversely affect printing. When not using the machine, remove any media and store it in a suitable environment.

Step 3: Preparations for Cutting Output

After printing crop marks and performing post-processing such as laminating, load the media again. Use this section to check the settings required for cutting output.

1. Loading Media with Crop Marks

Procedure

1. **Load the media on which crop marks have been printed.**

   Place the front left and right crop marks so they are straight and aligned with the blade protector (A).

   IMPORTANT

   Ensure that the crop marks are not angled by more than 5 degrees. Crop marks cannot be read at higher angles.

   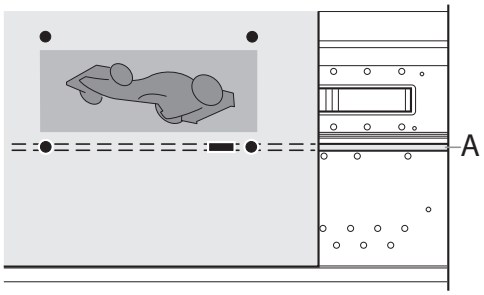

2. **Complete the setup of the media.**

RELATED LINKS

- P. 30Setup of Media

2. Preventing Pulling of the Media with Undue Force

Procedure

1. Press [MENU].
2. Press [▲] to display the following screen.

3. Press [▶] once, and then press [▲] several times to display the screen shown below.

4. Press [▶] to display the following screen.

5. Press [▲] or [▼] to select "ENABLE".

6. Press [ENTER] to confirm your entry.
7. Press [MENU] to return to the original screen.

MEMO

Default setting: "DISABLE"

3. Adjusting Cutting

For high-quality cutting, we recommend carrying out a cutting test to check the cutting quality for the media before you perform actual cutting. Adjust the blade force depending on the cutting quality.

Procedure

1. **Close the front cover.**

2. **Press [◀] while the following screen is displayed.**

   The cutting carriage comes out over the platen.

   ```
   W 1600mm
   ```

3. **Press [◀], [▶], [▲], or [▼] to move the cutting carriage to the location where you want to carry out the cutting test.**

   You can freely set the location for the cutting test.

4. **Press [FUNCTION].**

5. **Press [▼] several times to display the following screen.**

   ```
   FUNCTION          ◆
   CUT CONFIG        ▶
   ```

6. **Press [▶] to display the following screen.**

   ```
   CUT CONFIG        ◆
   TEST CUT          ↵
   ```

7. **Press [ENTER].**

   The test pattern is cut.

8. **Peel off the cut shapes to verify the cutting quality.**

   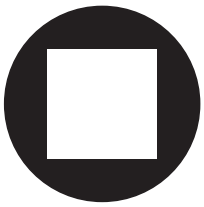

   - **Two shapes are peeled off separately**

     You do not need to perform the setting because the blade force is appropriate.
   - **Two shapes are peeled off together/backing paper is also cut**

     Proceed to the next step to set the blade force.

9. **Press [▼] to display the following screen.**

   ```
   CUT CONFIG        ◆
   FORCE             ▶
   ```

10. **Press [▶] to display the following screen.**

11. **Press [▲] or [▼] to select a value.**

- **Two shapes are peeled off together**

  Raise the blade force.
- **Backing paper is also cut**

  Reduce the blade force.

12. **Press [ENTER] to confirm your entry.**

13. **Press [◀], then [▲] to display the screen shown below.**

14. **Press [ENTER].**

The test pattern is cut.

15. **Check whether the correction was successful.**

In the "CUT SETTING" menu, you can also make settings for other cutting conditions in addition to the blade force. Refer to the following page.

RELATED LINKS

- P. 155Fine-tuning the Cutting Conditions

Step 4: Starting Cutting Output

⚠ WARNING

Never touch the print-head carriage while output is in progress.
The print-head carriage moves at high speed. Coming into contact with the moving carriage may cause injury.

Procedure

1. **Close the front cover.**

2. **Check that [SETUP] is lit.**
   If [SETUP] is not lit, the setup is not completed. Lower the loading lever, and then press [ENTER].

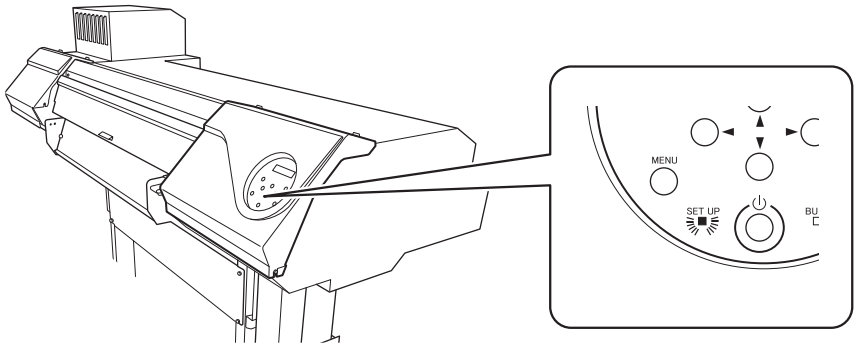

3. **Check that the screen shown below (the top menu) is displayed.**
   If the top menu is not displayed, press [MENU].

4. **Send the output data from the computer.**
   For information on how to create the output data, refer to the documentation for the software RIP.

IMPORTANT

Output Is Not Possible in These Situations

- The machine does not run when a cover (front, left, right, or the rear UV shield) is open.
- Data from the computer is not accepted when [SETUP] is dark.
- Data from the computer is not accepted when you are not at the top menu.

Points that must be observed

- Do not open a cover (front, left, right, or the rear UV shield) while output is in progress. Doing so interrupts printing.
- During output, do not touch the media. Doing so may obstruct the media feed or cause the media to rub against the print heads, which may result in a paper jam or damage to the heads.

When not using the machine, remove any media and store it in a suitable environment.

- Keep the loading lever raised when the machine is not in use.
- If the machine is left with the media loaded, the media may be damaged, which may adversely affect printing. When not using the machine, remove any media and store it in a suitable environment.

Optimizing Quality and Efficiency

Optimizing the Output Quality

Using the Correction Functions 144
Adjusting the Misalignment of the Ink Landing Position 144
Accurately Adjusting the Misalignment of the Ink Landing Position 146
Reducing Horizontal Bands (Feed Correction Function) 148
Configuring Settings to Match the Properties of the Media 150
Adjusting Print Head Height to Match Media Thickness 150
Using Transparent Media 152
Using Non-resilient Media 153
Using Media That Wrinkles Easily/Does Not Move Smoothly 154
Accurately Adjusting the Cutting Settings 155
Fine-tuning the Cutting Conditions 155
Accurately Adjusting the Cutting-in Amount 157
Making Adjustments When Cutting the Print Surface 159
Performing Distance Correction during Cutting 164
Cutting to Make It Possible to Cut Corners Attractively (Over Cut) 166
Prioritizing the Cutting Settings of This Machine over the Software RIP Settings 167
Accurately Adjusting the Settings for Printing and Cutting 168
Correcting the Misalignment of Printing and Cutting 168
Correcting the Misalignment of the Printing and Cutting Positions during Cutting 172
Accurately Adjusting the Settings for Cutting with Crop Marks 174
Aligning the Positions of Cutting with Crop Marks Manually 174
Correcting the Misalignment of Printing and Cutting with Crop Marks (Concurrent Test for Printing and Cutting with Crop Marks) 176
Correcting the Misalignment of Printing and Cutting with Crop Marks (Separate Test for Printing and Cutting with Crop Marks) 180
Correcting the Sensor for Reading Crop Marks 187
Adjusting the Level of the Sensor for Reading Crop Marks According to the Media 190
Resetting the Level of the Sensor for Reading Crop Marks 191
Avoiding Canceling Due to Cleaning during Printing 192
Cleaning during Printing 192

Using the Correction Functions

To optimize the output quality, it is effective to use some correction functions.

Adjusting the Misalignment of the Ink Landing Position

This adjusts the landing position of the ink discharged from the print heads. The landing position varies according to the print head height and the thickness of the media, so we recommend that you make corrections to match the media you are using.

First, print a test pattern, and then determine and enter the correction value. After entering the correction value, print a test pattern again and check the correction results.

Procedure

1. **Press [MENU].**

2. **Press [▼] several times to display the following screen.**

3. **Press [▶] to display the following screen.**

4. **Press [ENTER].**

   Printing of the test pattern starts.

5. **When printing is finished, press [▼], then [▶] to display the screen shown below.**

6. **View the printed test pattern, and then determine the correction value.**

   Select the value that gives the least misalignment between the two lines. In the case of the following figure, select "-3." When you cannot choose between two sequential numbers, select a value that is between them (you can set correction values in units of "0.5").

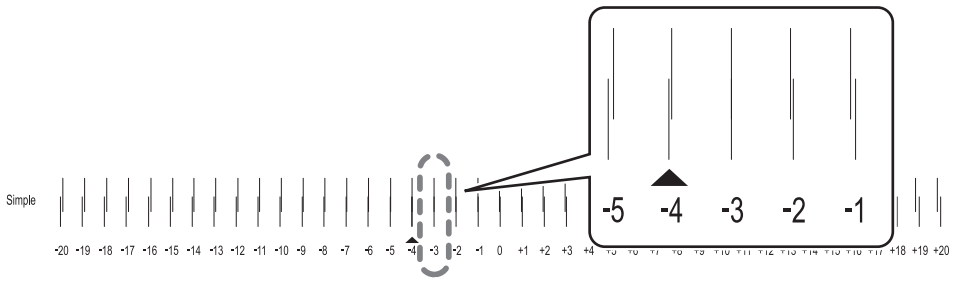

7. **Press [▲] or [▼] to select the correction value.**

8. **Press [ENTER] to confirm your entry.**

9. **Press [◀][▲] to display the following screen.**

10. **Press [ENTER].**

Printing of the test pattern starts.

11. **Check the test pattern to see whether the correction was successful.**

Check that the misalignment is minimized for the two vertical lines indicated by "▲" (that is, the current correction value). If the misalignment is smaller for another set of vertical lines, set the correction value again.

12. **When you have successfully performed the correction, press [MENU] to go back to the original screen.**

Accurately Adjusting the Misalignment of the Ink Landing Position

This adjusts the landing position of the ink discharged from the print heads. You can make adjustments more accurately than "MEDIA GAP ADJ SIMPLE SETTING". The landing position varies according to the print head height and the thickness of the media, so we recommend that you make corrections to match the media you are using.

First, print a test pattern, and then determine and enter the correction value. After entering the correction value, print a test pattern again and check the correction results.

This adjustment must be performed in the following cases.

- When using this machine for the first time
- When changing the media to use
- When you have changed the print-head height
- When printing does not improve with "MEDIA GAP ADJ SIMPLE SETTING"

Procedure

1. **Press [MENU].**

2. **Press [▼] several times to display the following screen.**

3. **Press [▶], then [▲] to display the screen shown below.**

4. **Press [▶] to display the following screen.**

5. **Press [ENTER].**

   Printing of the test pattern starts.

6. **When printing is finished, press [▼], then [▶] to display the screen shown below.**

7. **View the printed test pattern, and then determine the correction values from "MEDIA GAP ADJ. No.1" to "MEDIA GAP ADJ. No.4".**

   Select the value that gives the least misalignment between the two lines. In the case of the following figure, select "+5" for NO. 1. When you cannot choose between two sequential numbers, select a value that is between them (you can set correction values in units of "0.5").

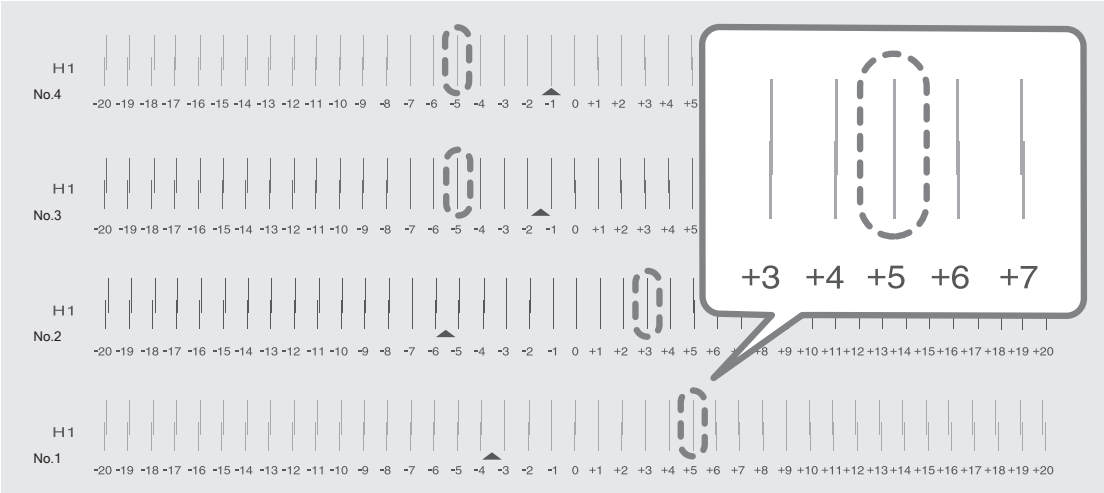

8. **Set the correction values from "No.1" to "No.4".**

(1) **Press [◀] or [▶] to select a value from "No.1" to "No.4".**

(2) **Press [▲] or [▼] to select the correction value.**

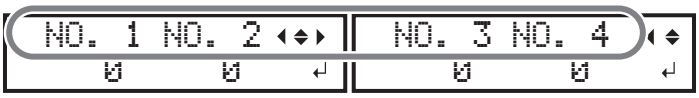

(3) **When you have finished setting the correction values, press [ENTER].**

The screen shown below appears again.

9. **Press [▼] to display the following screen.**

10. **Press [ENTER].**

Printing of the test pattern starts.

11. **Check the test pattern to see whether the correction was successful.**

For all the correction values, check that the misalignment is minimized for the two vertical lines indicated by "▲" (that is, the current correction value). If the misalignment is smaller for another set of vertical lines, set the correction value again.

12. **When you have successfully performed the correction, press [MENU] to go back to the original screen.**

RELATED LINKS

- P. 144Adjusting the Misalignment of the Ink Landing Position

Reducing Horizontal Bands (Feed Correction Function)

Perform corrections to make the band-shaped "stripes" on the printed surface less noticeable.

The band-shaped "stripes" are called "horizontal bands" or "banding." Horizontal bands are caused by the subtle changes in the movement distance that occur when feeding the media depending on the media's thickness. We recommend making corrections to match the media you are using.

First, print a test pattern, and then determine and enter the correction value. After entering the correction value, print a test pattern again and check the correction results. Repeat the process of printing a test pattern and entering a correction value several times to find the optimal correction value.

Procedure

1. **If using roll media, check that the media is not sagging.**
2. **Press [MENU].**
3. **Press [▼] several times to display the following screen.**

4. **Press [▶] to display the following screen.**

5. **Press [ENTER].**

   Printing of the test pattern starts.

6. **When printing is finished, press [▼], then [▶] to display the screen shown below.**

7. **View the printed test pattern, and then determine the correction value.**

   The current correction value (①) is that of the figure indicated by "▲." Select the value to make the gap (②) and overlap (③) between the upper/lower squares smallest (④). In the case of the following figure, select "-0.40." When you cannot choose between two sequential numbers, specify a value that is between them.

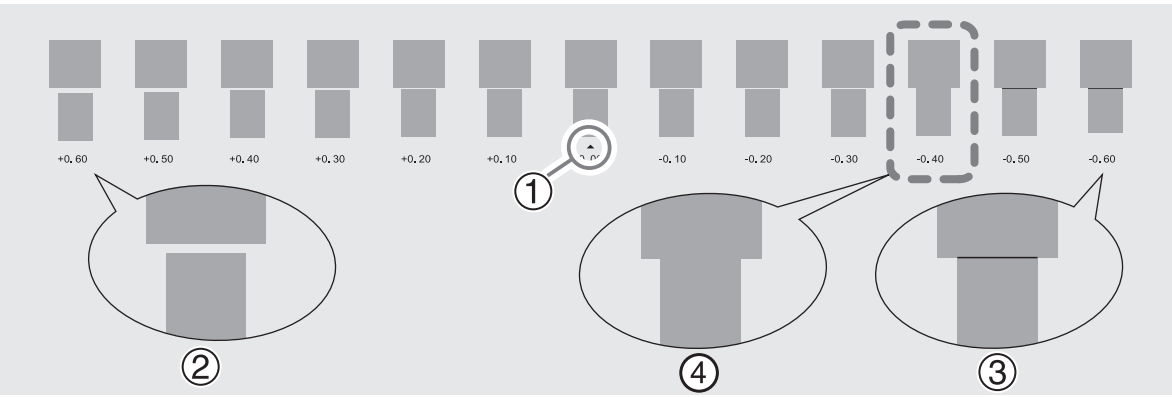

8. **Press [▲] or [▼] to select the correction value.**

9. **Press [ENTER] to confirm your entry.**

10. **Press [◀][▼] to display the following screen.**

11. **Press [ENTER].**

Printing of the test pattern starts.

12. **Check the test pattern to see whether the correction was successful.**

Check that the gap and overlap are the smallest for the figure indicated by "▲" (that is, the current correction value). If the gap and overlap are smaller for another figure, set the correction value again.

13. **When you have successfully performed the correction, press [MENU] to go back to the original screen.**

MEMO

- Default setting: 0.00%
- Depending on the software RIP you are using, you can also configure this setting in the software RIP (by, for example, choosing the media type). When you have made the setting in the software RIP, the software RIP's setting is used and the printer's setting is ignored.

Configuring Settings to Match the Properties of the Media

Adjusting Print Head Height to Match Media Thickness

This adjusts the print head height to prevent media that is wrinkled or comes loose from the platen from contacting the print heads.

For media with a general thickness, select the print head height from "LOW" or "HIGH". Normally move the height-adjustment lever to "LOW". For media that is wrinkled or comes loose from the platen during printing, move the height-adjustment lever to "HIGH". The printing quality degrades as the distance between the media and the print heads increases. Do not move the height-adjustment lever to "HIGH" needlessly.

Use "SpLOW" when printing on extremely thin media with a thickness of 0.2 mm (0.008 in.) or less. When doing so, be sure to remove the media clamps.

Procedure

1. **Press [MENU].**

2. **Press [▼] several times to display the following screen.**

3. **Press [▶]. After "NOW PROCESSING.." is displayed, the screen shown below appears.**

4. **Open the front cover.**

5. **Move the height-adjustment lever to adjust the head height.**

   When you change the position of the height-adjustment lever, the display screen changes and the buzzer sounds at the same time.

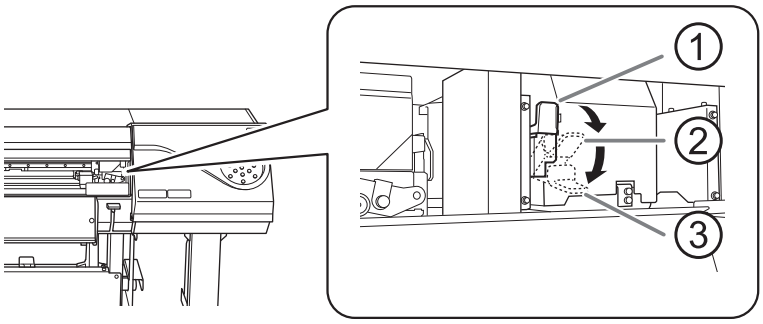

	Position	Display screen
①	"HIGH"	
②	"LOW"	
③	"SpLOW"	

IMPORTANT

When you have moved the height-adjustment lever to "SpLOW", remove the media clamps.

MEMO

- Normally move the height-adjustment lever to "LOW". For media that is wrinkled or comes loose from the platen during printing, move the height-adjustment lever to "HIGH".
- The printing quality degrades as the distance between the media and the print heads increases. Do not move the height-adjustment lever to "HIGH" needlessly.

6. **Close the front cover.**

7. **Press [MENU] to return to the original screen.**

MEMO

- Default setting: "LOW"
- If degradation of printing quality occurs after raising the print head height, refer to the following page and try optimizing the quality.

RELATED LINKS

- P. 144Adjusting the Misalignment of the Ink Landing Position
- P. 146Accurately Adjusting the Misalignment of the Ink Landing Position

Using Transparent Media

Disabling Detection of the Edges of the Media

You can set up transparent media by disabling detection of the leading and trailing edges of the media.

Normally, detecting the leading and trailing edges of the media enables you to verify the presence of the media, and the media is then ready for setup. However, since transparent media cannot be detected, set-up will not be possible. Disabling detection of the edges of the media will prevent media skewing correction support during setup from being performed even if media skewing correction support is enabled. Use the following procedure to determine the positions of the media during its setup.

- Roll media:2. B: Determine the positions of the media.(P. 40)
- Sheet media:1. B: Determine the positions of the media.(P. 55)

Procedure

1. **Press [MENU].**
2. **Press [▼] several times to display the following screen.**

3. **Press [▶] to display the following screen.**

4. **Press [▶] to display the following screen.**

5. **Press [▲] or [▼] to select "DISABLE".**
6. **Press [ENTER] to confirm your entry.**
7. **Press [MENU] to return to the original screen.**

MEMO

- Default setting: "ENABLE"
- When set to "DISABLE", printing operation does not stop when the media runs out. If media runs out while printing is in progress, immediately press [PAUSE] to stop printing. Otherwise, there is a chance that the platen or other parts may become soiled by ink or that ink may get inside and damage the machine.

Using Non-resilient Media

Disabling Media Skewing Correction Support

You can manually set the media suction force by setting the media skewing correction support to "DISABLE". If the media has not been set up, the suction force is 20%. This value switches from 50% to 100% to 20% each time [PAUSE] is pressed.

Procedure

1. Press [MENU].
2. Press [▼] several times to display the following screen.

3. Press [▶] to display the following screen.

4. Press [▶] to display the following screen.

5. Press [▲] or [▼] to select "DISABLE".
6. Press [ENTER] to confirm your entry.
7. Press [MENU] to return to the original screen.

MEMO

- Default setting: "ENABLE"

Using Media That Wrinkles Easily/Does Not Move Smoothly

The platen uses suction to grip the media and keep it stable. The suction force can be adjusted corresponding to the nature and condition of the media.

Procedure

1. **Press [MENU].**

2. **Press [▼] several times to display the following screen.**

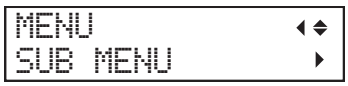

3. **Press [▶] once, and then press [▼] several times to display the screen shown below.**

4. **Press [▶] to display the following screen.**

5. **Press [▲] or [▼] to select a value.**

0 to 100%	When the media is flimsy and cannot move smoothly, decreasing this value (reducing the suction force) may correct the problem.
"AUTO" (Default settings)	The suction force is automatically adjusted to the optimal level for the media width

6. **Press [ENTER] to confirm your entry.**

7. **Press [MENU] to return to the original screen.**

MEMO

- Depending on the software RIP you are using, you can also make this setting in the software RIP. When you have made the setting in the software RIP, the machine's setting is ignored.

Accurately Adjusting the Cutting Settings

Fine-tuning the Cutting Conditions

You can accurately set items such as the blade force, movement speed, and blade offset to match the nature of the media and the shape to cut. First, perform a cutting test, and then determine and enter the setting values. After entering the setting values, perform a cutting test again and check the results. Repeat the process of performing a cutting test and making the settings several times to find the optimal setting values.

Procedure

1. **Close the front cover.**

2. **Press [◀], [▶], [▲], or [▼] to move the cutting carriage to the location where you want to carry out the cutting test.**

   You can freely set the location for the cutting test.

3. **Press [FUNCTION].**

4. **Press [▼] several times to display the following screen.**

5. **Press [▶] to display the following screen.**

6. **Press [ENTER].**

   The test pattern is cut.

7. **When the cutting of the test pattern is finished, press [▼].**

8. **Check the results of the cutting test.**

   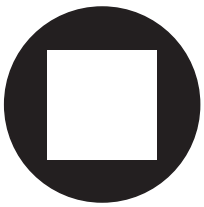

Check item	Result	Setting item	Adjustment
Check the shape.	The cut shape is distorted.	"SPEED"	Reduce
Peel off the circle.	The square also peels off.	"FORCE"	Increase
	Some uncut areas remain.	"SPEED"	Reduce

Check item	Result		Setting item	Adjustment
Peel off the square.	The blade leaves faint traces on the backing paper.		"FORCE"	No change
	The blade trace is indistinct.			Increase
	The blade trace is too deep and cuts into the backing paper.			Reduce
Check the shape of the square you have peeled off.		The corners are not rounded and do not have "horns."	"OFFSET"	No change
		The corners are rounded.		Increase
		The corners have "horns."		Reduce

9. **Press [▲] or [▼] to select the cutting condition you want to set.**

Display screen (cutting conditions)	Setting details	Default settings
CUT CONFIG FORCE	Set the force (pressure) of the blade.	50 gf
CUT CONFIG SPEED	Set the speed of cutting.	30 cm/s
CUT CONFIG OFFSET	Set the blade offset. Enter the listed offset value for the blade. The offset value for the included blade is 0.250 mm (9.84 mil).	0.250 mm (0.010 in.)
CUT CONFIG UP-SPEED	Set the blade's up speed during cutting (the speed at which the blade travels when it moves to the next cutting line after cutting one cutting line). If the media comes loose during no-load feed and the blade damages the surface of the media, reduce the speed.	30 cm/s

10. **Press [▶] to display the following screen.**

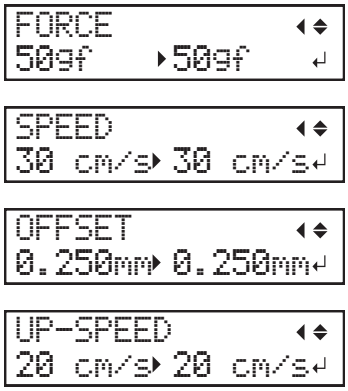

11. **Press [▲] or [▼] to select a value.**

12. **Press [ENTER] to confirm your entry.**

13. **Press [◀] to go back to step 9.**

Repeat steps 9 to 12 to adjust the cutting conditions.

14. **Press [FUNCTION] to return to the original screen.**

Accurately Adjusting the Cutting-in Amount

When you want to perform accurate and fine adjustment of the cutting-in amount, such as when cutting media with thin backing paper, you can obtain good results by adjusting the amount of blade extension. Turn the cap portion of the blade holder to adjust the amount of blade extension. Each indicator tick corresponds to 0.1 mm (3.9 mil), and adjustment for 0.5 mm (19.7 mil) can be made by rotating the cap one full turn.

Note that making the amount of blade extension too small may cause the tip of the blade holder cap to touch the printed surface, soiling and damaging it. It is important to be especially careful about this when you are using media that has poor ink-adhesion properties.

The amount of blade extension (③) is 0 mm (①) at minimum and 2.5 mm (98.4 mil) (②) at maximum.

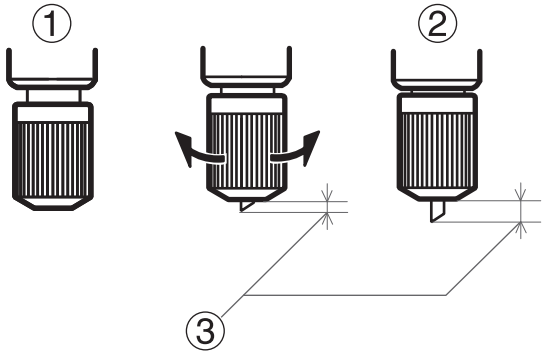

Rough Estimate for the Amount of Blade Extension (When Creating a Sticker)

Set the amount of blade extension (①) to an amount that is the sum of the thickness of the material portion (②) and half (④) the thickness of the backing paper (③).

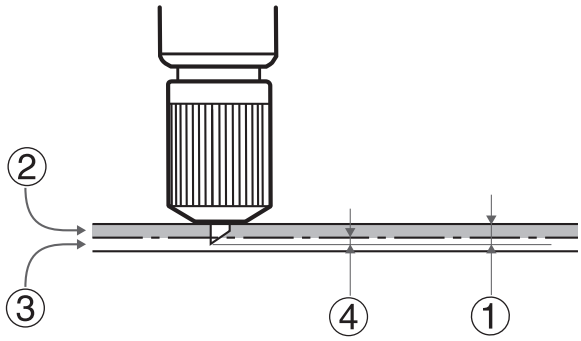

Rough Estimate for the Amount of Blade Extension (When Cutting Perforated Lines)

Set the amount of blade extension (①) so that when the cutter pierces the media (②), the blade extends slightly.

For information about the output settings for cutting perforated lines, refer to the documentation for VersaWorks.

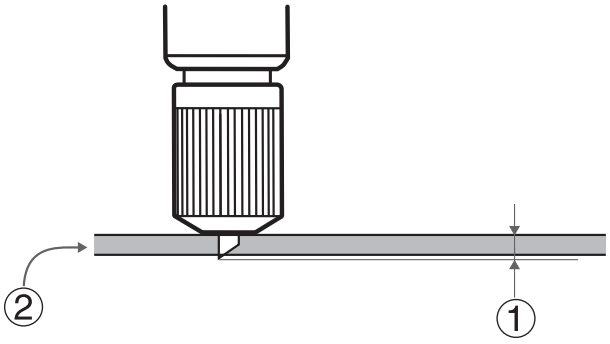

IMPORTANT

Pushing the blade out too far will damage the blade and blade protector and hasten their deterioration, so exercise caution.

Making Adjustments When Cutting the Print Surface

Hardened ink is thick. Therefore, the cutting conditions vary between cutting the print surface and cutting parts that have not been printed on. When cutting the print surface, use this "CUT TEST PRINT" function to adjust the cutting conditions.

* This adjustment is only an estimate. Accuracy is not assured.

1. Set the start position for the cutting and printing test.

Procedure

1. **Load the media.**

P. 30Setup of Media

2. **Press [◀], [▶], [▲], or [▼] to move the cutting carriage.**

You can perform the cutting and printing test from the desired position. Align the center of the blade with the print-start position.

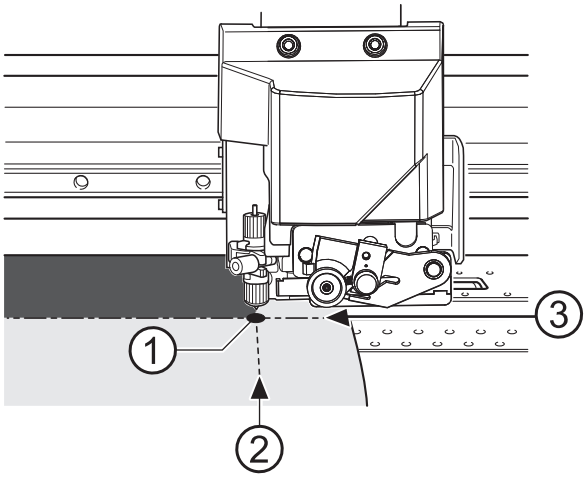

①: Printing-start location

②: Feed-direction start position

③: Feed-direction start position

3. **Press [FUNCTION] to display the following screen.**

4. **Press [ENTER].**

The base point is set.

2. Perform a cutting and printing test, and then perform a cutting test on the media used for the first test.

Procedure

1. **Press [FUNCTION].**

2. **Press [▲][▶] to display the following screen.**

3. **Press [▲] to display the screen shown below.**

4. **Press [ENTER].**

   Printing is performed as shown in the figure.

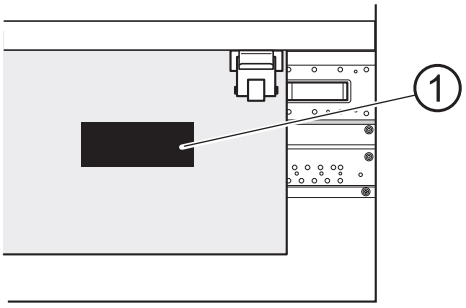

   ①: Cutting and printing test

5. **Press [▼] to display the following screen.**

6. **Press [ENTER].**

   The cutting test is performed.

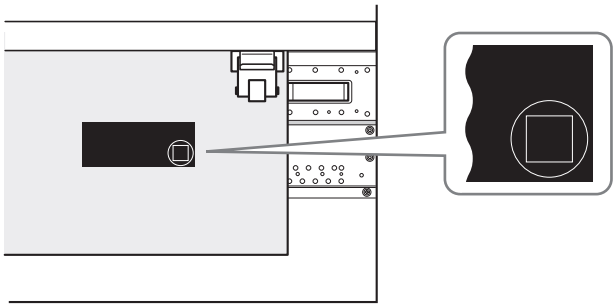

3. Check the results of the cutting test and adjust the cutting conditions.

Procedure

1. Open the front cover.

2. Check the results of the cutting test.

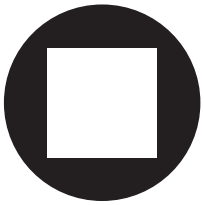

Check item	Result		Setting item	Adjustment
Check the shape.	The cut shape is distorted.		"SPEED"	Reduce
Peel off the circle.	The square also peels off.		"FORCE"	Increase
	Some uncut areas remain.		"SPEED"	Reduce
Peel off the square.	The blade leaves faint traces on the backing paper.		"FORCE"	No change
	The blade trace is indistinct.			Increase
	The blade trace is too deep and cuts into the backing paper.			Reduce
Check the shape of the square you have peeled off.		The corners are not rounded and do not have "horns."	"OFFSET"	No change
		The corners are rounded.		Increase
		The corners have "horns."		Reduce

3. Press [▲] or [▼] to select the cutting condition you want to set.

Display screen (cutting conditions)	Setting details	Default settings
CUT CONFIG FORCE ◆▲▼▶	Set the force (pressure) of the blade.	50 gf
CUT CONFIG SPEED ◆▲▼▶	Set the speed of cutting.	30 cm/s
CUT CONFIG OFFSET ◆▲▼▶	Set the blade offset. Enter the listed offset value for the blade. The offset value for the included blade is 0.250 mm (9.84 mil).	0.250 mm (0.010 in.)
CUT CONFIG UP-SPEED ◆▲▼▶	Set the blade's up speed during cutting (the speed at which the blade travels when it moves to the next cutting line after cutting one cutting line). If the media comes loose during no-load feed and the blade damages the surface of the media, reduce the speed.	30 cm/s

4. Press [▶] to display the following screen.

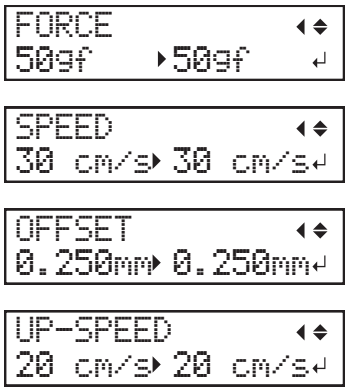

5. Press [▲] or [▼] to select a value.
6. Press [ENTER].
7. Close the front cover.

4. Check the adjustment results.

Procedure

1. **Press [FUNCTION].**

2. **Press [◀], [▶], [▲], or [▼] to move the cutting carriage.**

   Align the center of the blade with the position where the cutting test can be performed on the media used for the cutting and printing test.

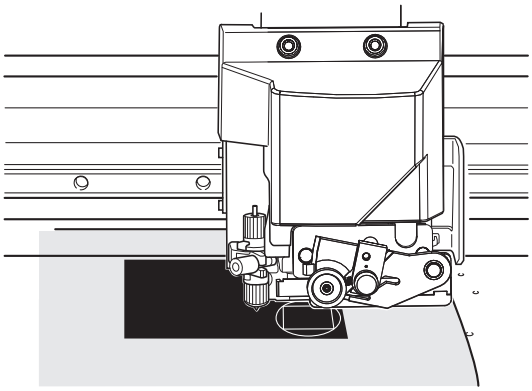

3. **Press [FUNCTION].**

4. **Press [▼] several times to display the following screen.**

5. **Press [▶] to display the following screen.**

6. **Press [ENTER].**

   The cutting test is performed.

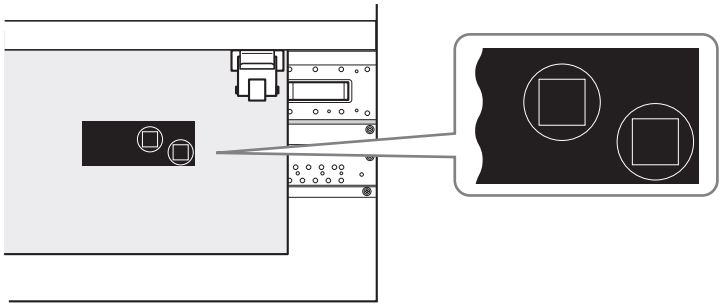

7. **Open the front cover.**

8. **Check the results of the cutting test again.**

Performing Distance Correction during Cutting

This correction is performed when you want to accurately align the lengths of cut lines when cutting. This setting is also applied during cutting only, printing and cutting, or cutting with crop marks.

The movement distance of the media changes subtly depending on the media's thickness. This means that the length of a line when cut may differ from the length setting in the data.

Procedure

1. **Press [MENU].**

2. **Press [▲] to display the following screen.**

3. **Press [▶] once, and then press [▼] several times to display the screen shown below.**

4. **Press [▶] twice to display the screen shown below.**

5. **Press [▲] or [▼] to select the correction value.**

   Set the correction value of the media feed direction.

6. **Press [ENTER] to confirm your entry.**

7. **Press [◀], then [▼] to display the screen shown below.**

8. **Press [▶] to display the following screen.**

9. **Press [▲] or [▼] to select the correction value.**

   Set the correction value of the cutting carriage movement direction.

10. **Press [ENTER] to confirm your entry.**

11. **Press [MENU] to return to the original screen.**

MEMO

Default settings

- "FEED　SETTING": 0.00%
- "SCAN SETTING": 0.00%

Cutting to Make It Possible to Cut Corners Attractively (Over Cut)

Cutting the corners of the border of the cutting line slightly longer makes it possible to cut the corners attractively.

This is effective when using laminated or thick media, or non-resilient media. It also has the effect of making stickers easier to peel off.

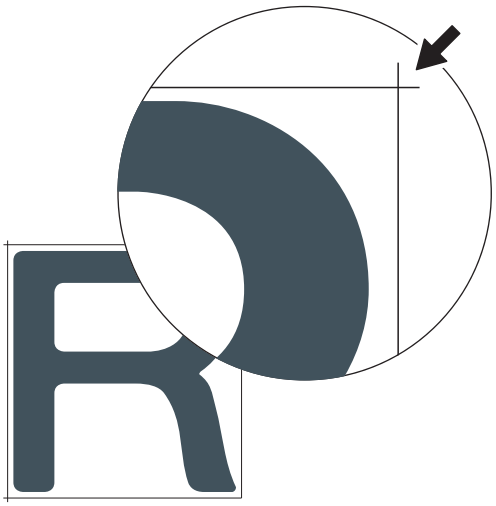

Procedure

1. **Press [MENU].**
2. **Press [▲] to display the following screen.**

3. **Press [▶] once, and then press [▼] several times to display the screen shown below.**

4. **Press [▶] to display the following screen.**

5. **Press [▲] or [▼] to select "ENABLE".**
6. **Press [ENTER] to confirm your entry.**
7. **Press [MENU] to return to the original screen.**

MEMO

- Default setting: "DISABLE"
- The cutting start point is not over cut.

Prioritizing the Cutting Settings of This Machine over the Software RIP Settings

This setting is used to prioritize the cutting conditions set on the machine over the software RIP settings. You can also make the settings for the cutting conditions in the software RIP, and normally the software RIP settings are given priority.

Procedure

1. **Press [MENU].**

2. **Press [▲] to display the following screen.**

3. **Press [▶] once, and then press [▼] several times to display the screen shown below.**

4. **Press [▶] to display the following screen.**

5. **Press [▲] or [▼] to select "MENU".**

   Prioritize the cutting conditions set on the machine over the software RIP settings.

   If this is set to "COMMAND", priority is given to the software RIP settings.

6. **Press [ENTER] to confirm your entry.**

7. **Press [MENU] to return to the original screen.**

MEMO

Default setting: "COMMAND"

Accurately Adjusting the Settings for Printing and Cutting

Correcting the Misalignment of Printing and Cutting

This is a correction method performed when printing followed immediately by cutting yields positioning for printing and cutting that is slightly misaligned.

Print alignment marks, perform detection of the printed marks, and then correct the discrepancy. Subtle misalignment between the printing and cutting positions may occur due to the thickness of the media or the head height. We recommend that you make corrections to match the media you are using.

1. Adjust the misalignment of the ink landing position.

Procedure

1. **Press [MENU].**

2. **Press [▼] several times to display the following screen.**

3. **Press [▶] to display the following screen.**

4. **Press [ENTER].**

   Printing of the test pattern starts.

5. **When printing is finished, press [▼], then [▶] to display the screen shown below.**

6. **View the printed test pattern, and then determine the correction value.**

   Select the value that gives the least misalignment between the two lines. In the case of the following figure, select "-3." When you cannot choose between two sequential numbers, select a value that is between them (you can set correction values in units of "0.5").

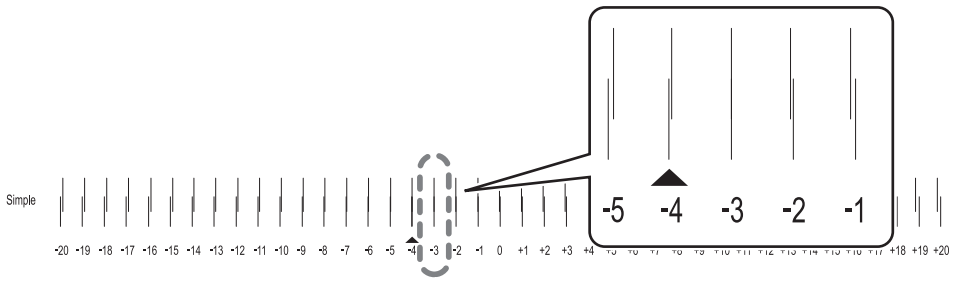

7. **Press [▲] or [▼] to select the correction value.**

8. **Press [ENTER] to confirm your entry.**

9. **Press [◀][▲] to display the following screen.**

10. **Press [ENTER].**

Printing of the test pattern starts.

11. **Check the test pattern to see whether the correction was successful.**

Check that the misalignment is minimized for the two vertical lines indicated by "▲" (that is, the current correction value). If the misalignment is smaller for another set of vertical lines, set the correction value again.

12. **When you have successfully performed the correction, press [MENU] to go back to the original screen.**

2. Correcting the Misalignment of Printing and Cutting

Procedure

1. **Press [MENU].**

2. **Press [▲] once, and then press [▶] twice to display the screen shown below.**

3. **Press [ENTER].**

The test pattern (P&C1) is printed and cut. The test pattern is printed at each edge of the media.

MEMO

If the media is tilted, the positions at the edges will be misaligned. You can also adjust for misalignments due to the media being tilted by printing the test pattern at each edge.

4. **Check the test pattern (P&C1).**

Check whether the printing position (shaded part) and the cutting position (outer frame) are aligned. An example of the printing position and the cutting position being misaligned is shown in the following figure.

"F" indicates the feed direction of the media (the feed direction) and "S" indicates the direction of print head movement (the scan direction).

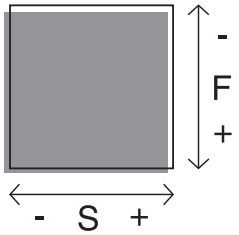

If the printing position and the cutting position are aligned, no corrections are necessary.

If the printing position and the cutting position are not aligned, proceed to the next procedure.

5. **Press [▼] twice to display the screen shown below.**

6. **Press [ENTER].**

The test pattern (P&C2) is printed and cut.

7. **Press [▲] to display the following screen.**

8. **Check the correction values from the test pattern (P&C2) condition.**

The point where the cutting line (①) intersects the correction-value scale (②) is the correction value. In the following figure, the correction value is "−0.3."

Check the media feed direction (the feed direction) and the direction of print head movement (the scan direction).

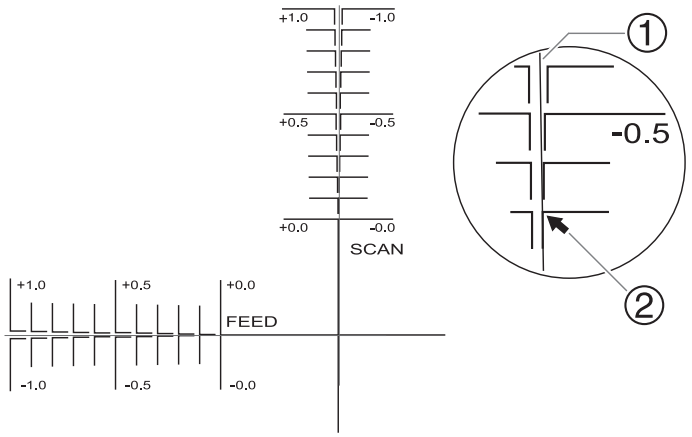

9. **Press [▶].**

10. **Set the correction values for the feed direction "F" and scan direction "S".**

(1) **Press [▲] or [▼] to set the correction value for the feed direction "F".**

(2) **Press [◀] or [▶] to set the correction value for the scan direction "S".**

(3) **When you have finished setting the correction values, press [ENTER].**

11. **Press [MENU], then [▲] to display the screen shown below.**

12. **Press [ENTER].**

The test pattern (P&C1) is printed and cut. If the printing and cutting lines are aligned, adjustment is complete. If further adjustment is needed, press [▼], then [▶] to go back to step 10 and fine-tune the adjustment.

MEMO

Default settings

- "F" (correction value of the media feed direction): 0.00 mm
- "S" (correction value of the cutting carriage movement direction): 0.00 mm

Correcting the Misalignment of the Printing and Cutting Positions during Cutting

This method pauses a cutting operation to correct the misalignment of the printing and cutting positions. The correction values set here are applied as the default values of the printing and cutting positions.

If the printing and cutting positions are misaligned, you normally adjust the positions while checking a test pattern.

Procedure

1. **During cutting, press [PAUSE] to display the screen shown below.**

```
TO CANCEL, HOLD
  DOWN PAUSE KEY
```

The cutting operation is paused.

2. **Press [FUNCTION].**

The screen shown below appears.

```
FUNCTION        ◀
CUT CONFIG      ▶
```

3. **Press [▶] once, and then press [▼] several times to display the screen shown below.**

```
CUT CONFIG      ◀▲▼
PRINT-CUT ADJ.  ↵
```

4. **Press [▶].**

5. **Determine the correction values.**

MEMO

Determine the values so as to correct the misalignment of the cutting position (②) in relation to the printing position (①). In the case of the following figure, feed direction "F" is misaligned in a negative direction and scan direction "S" in a positive direction. Therefore, set the correction values for the feed direction "F" to positive values and the scan direction "S" to negative values. Measure the actual misalignment amount when determining the value.

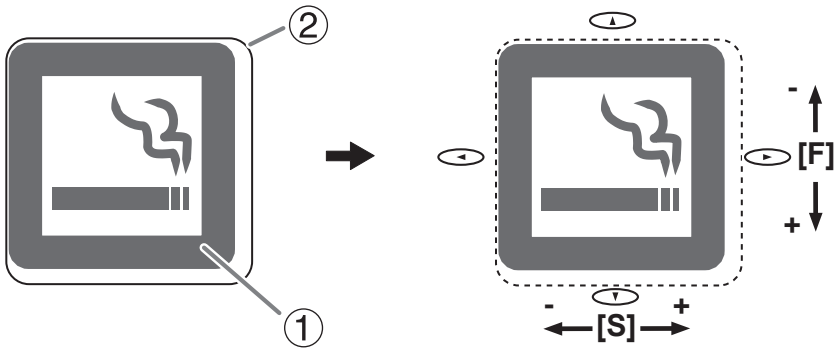

6. **Set the correction values for the feed direction "F" and scan direction "S".**

(1) **Press [▲] or [▼] to set the correction value for the feed direction "F".**

(2) **Press [◀] or [▶] to set the correction value for the scan direction "S".**

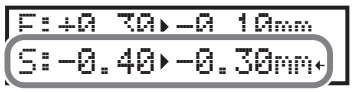

(3) **When you have finished setting the correction values, press [ENTER].**

7. **Press [PAUSE] to display the following screen.**

8. **Press [PAUSE] again to restart the cutting operation.**

Hold down [PAUSE] for 1 second or longer to cancel the cutting operation.

MEMO

Default settings

- "F" (correction value of the media feed direction): 0.00 mm
- "S" (correction value of the cutting carriage movement direction): 0.00 mm

RELATED LINKS

- P. 66Pausing and Canceling Output
- P. 168Correcting the Misalignment of Printing and Cutting

Accurately Adjusting the Settings for Cutting with Crop Marks

Aligning the Positions of Cutting with Crop Marks Manually

Depending on the type of media, it may not be possible to detect crop marks automatically. When crop marks cannot be detected automatically, perform alignment manually.

The following figure is given as an example to explain how to manually set the "base point "B"" and align points (①②③).

The numbers for align points are determined with reference to the location of the base point, as shown in the following figure. You cannot set the align points unless you specify the base point. Redoing the setting for the base point clears any align points that have been set.

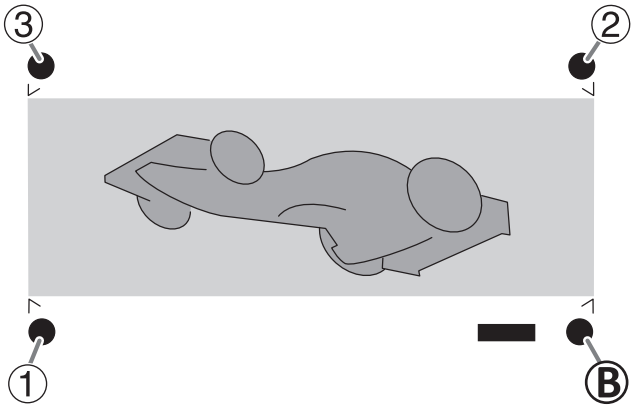

Procedure

1. Press [◀], [▶], [▲] or [▼] to move the center of the blade to the base point "B" position.

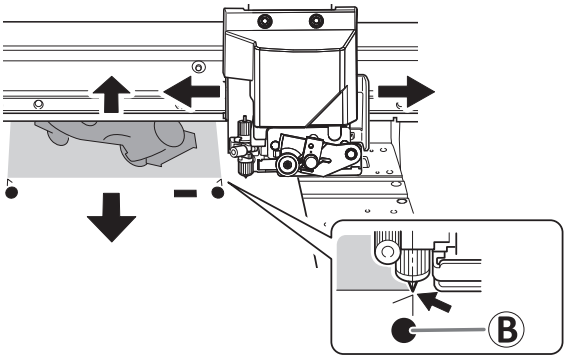

2. Press [FUNCTION] to display the following screen.

3. Press [ENTER].

The [BASE POINT] is set. The character "B" is displayed on the screen.

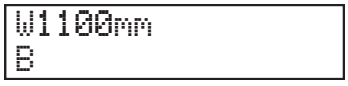

4. Press [◀], [▶], [▲], or [▼] to move the center of the blade to the "align point 1 (①)" position.

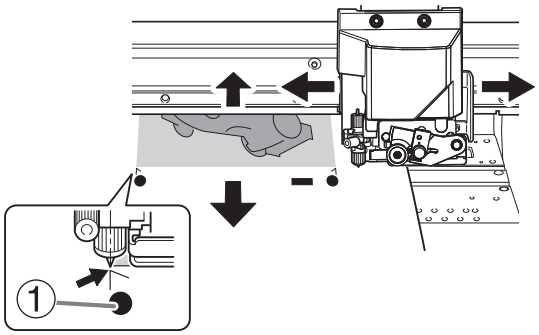

5. **Press [FUNCTION], then [▶] to display the screen shown below.**

6. **Press [ENTER].**

The [ALIGN POINT] is set. The character "B1" is displayed on the screen.

7. **Repeat steps 4 through 6 to specify "align point 2" and "align point 3" as required.**

The number of the align point you are setting is determined automatically.

Correcting the Misalignment of Printing and Cutting with Crop Marks (Concurrent Test for Printing and Cutting with Crop Marks)

Depending on the composition of the media, the positioning of printing and cutting may be misaligned even when you are using crop marks. Make corrections for misaligned printing and cutting for the media you are using.

In cutting with crop marks, cutting is performed after removing the media after printing. However, with this method, you can make corrections of printing and cutting positions at the same time without removing the media.

1. Adjust the misalignment of the ink landing position.

Procedure

1. **Press [MENU].**

2. **Press [▼] several times to display the following screen.**

3. **Press [▶] to display the following screen.**

4. **Press [ENTER].**

   Printing of the test pattern starts.

5. **When printing is finished, press [▼], then [▶] to display the screen shown below.**

6. **View the printed test pattern, and then determine the correction value.**

   Select the value that gives the least misalignment between the two lines. In the case of the following figure, select "-3." When you cannot choose between two sequential numbers, select a value that is between them (you can set correction values in units of "0.5").

   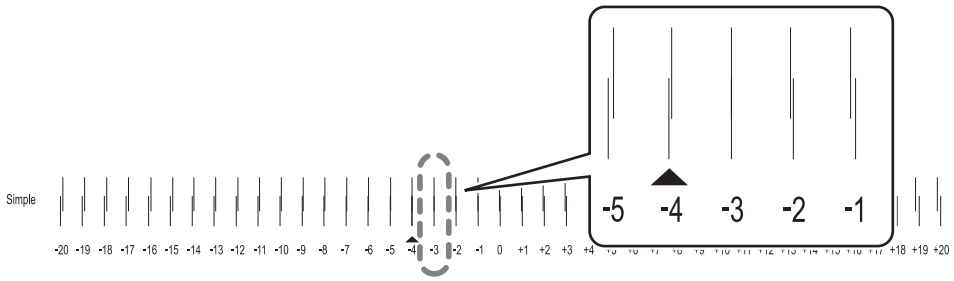

7. **Press [▲] or [▼] to select the correction value.**

8. **Press [ENTER] to confirm your entry.**

9. **Press [◀][▲] to display the following screen.**

10. **Press [ENTER].**

Printing of the test pattern starts.

11. **Check the test pattern to see whether the correction was successful.**

Check that the misalignment is minimized for the two vertical lines indicated by "▲" (that is, the current correction value). If the misalignment is smaller for another set of vertical lines, set the correction value again.

12. **When you have successfully performed the correction, press [MENU] to go back to the original screen.**

2. Correct the misalignment of printing and cutting with crop marks at the same time.

Procedure

1. **Press [MENU].**

2. **Press [▲] to display the following screen.**

3. **Press [▶], then [▼][▶] to display the screen shown below.**

4. **Press [ENTER].**

   The test pattern (C&C1) is printed and cut. One test pattern is printed on the media.

5. **Check the test pattern (C&C1) condition.**

   Check whether the printing position (shaded part) and the cutting position (outer frame) are aligned. An example of the printing position and the cutting position being misaligned is shown in the following figure.

   "F" indicates the feed direction of the media (the feed direction) and "S" indicates the direction of print head movement (the scan direction).

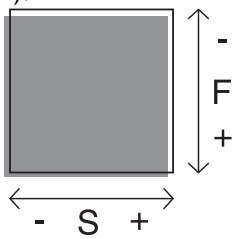

   If the printing position and the cutting position are aligned, no corrections are necessary.

   If the printing position and the cutting position are not aligned, proceed to the next procedure.

6. **Press [▼] twice to display the screen shown below.**

7. **Press [ENTER].**

   The test pattern (C&C2) is printed and cut.

8. **Press [▲] to display the following screen.**

9. **Check the correction values from the test pattern (C&C2) condition.**

   The point where the cutting line (①) intersects the correction-value scale (②) is the correction value. In the following figure, the correction value is "−0.3."

Check the media feed direction (the feed direction) and the direction of print head movement (the scan direction).

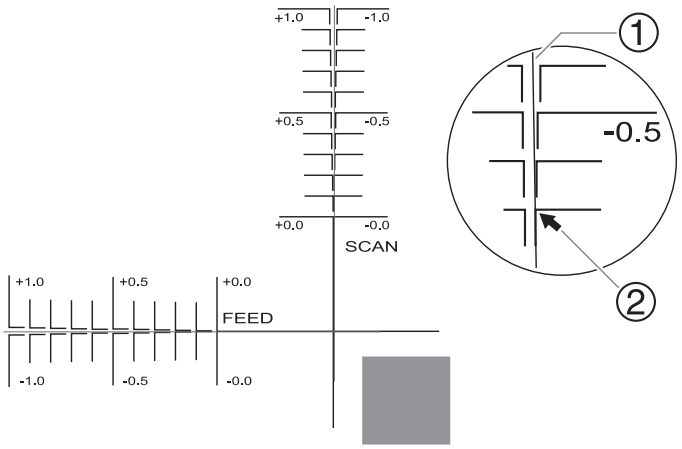

10. **Press [▶].**

11. **Set the correction values for the feed direction "F" and scan direction "S".**

(1) **Press [▲] or [▼] to set the correction value for the feed direction "F".**

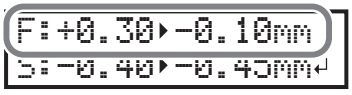

(2) **Press [◀] or [▶] to set the correction value for the scan direction "S".**

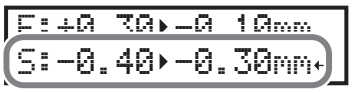

(3) **When you have finished setting the correction values, press [ENTER].**

12. **Press [MENU], then [▲] to display the screen shown below.**

13. **Press [ENTER].**

The test pattern (C&C1) is printed and cut. If the printing and cutting lines are aligned, adjustment is complete. If further adjustment is needed, press [▼], then [▶] to go back to step 11 and fine-tune the adjustment.

MEMO

- Default settings
  - "F" (correction value of the media feed direction): 0.00 mm
  - "S" (correction value of the cutting carriage movement direction): 0.00 mm
- Depending on the changes in the condition of media caused by laminating and the loading position of the media before cutting, the positioning of cutting may be misaligned. In such cases, refer to the following page.

RELATED LINKS

• P. 180Correcting the Misalignment of Printing and Cutting with Crop Marks (Separate Test for Printing and Cutting with Crop Marks)

Correcting the Misalignment of Printing and Cutting with Crop Marks (Separate Test for Printing and Cutting with Crop Marks)

Due to changes in the thickness of media caused by laminating and misalignment of the loading position of the media before and after cutting, the positioning of printing and cutting may be misaligned even when you are using crop marks. Make corrections for misaligned printing and cutting for the media you are using and its condition.

In this test, so as to create the same conditions as the actual operation, print only the crop marks, remove the media, load the media again, and then cut the media.

1. Adjust the misalignment of the ink landing position.

Procedure

1. **Press [MENU].**

2. **Press [▼] several times to display the following screen.**

3. **Press [▶] to display the following screen.**

4. **Press [ENTER].**

   Printing of the test pattern starts.

5. **When printing is finished, press [▼], then [▶] to display the screen shown below.**

6. **View the printed test pattern, and then determine the correction value.**

   Select the value that gives the least misalignment between the two lines. In the case of the following figure, select "-3." When you cannot choose between two sequential numbers, select a value that is between them (you can set correction values in units of "0.5").

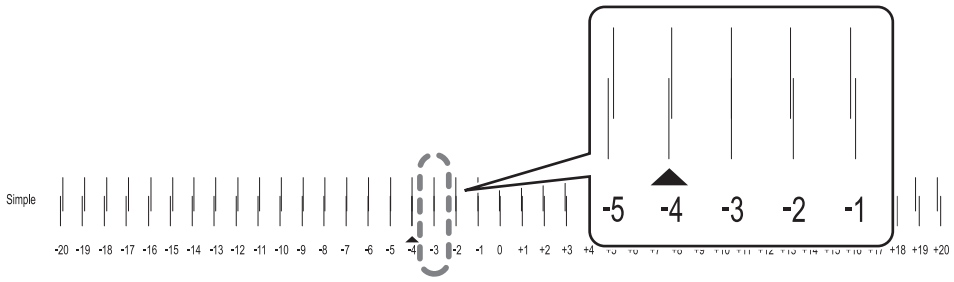

7. **Press [▲] or [▼] to select the correction value.**

8. **Press [ENTER] to confirm your entry.**

9. **Press [◀][▲] to display the following screen.**

10. **Press [ENTER].**

Printing of the test pattern starts.

11. **Check the test pattern to see whether the correction was successful.**

Check that the misalignment is minimized for the two vertical lines indicated by "▲" (that is, the current correction value). If the misalignment is smaller for another set of vertical lines, set the correction value again.

12. **When you have successfully performed the correction, press [MENU] to go back to the original screen.**

2. Print only the crop marks.

Procedure

1. **Press [MENU].**

2. **Press [▲] to display the following screen.**

3. **Press [▶], then [▼] to display the screen shown below.**

4. **Press [▶] twice to display the screen shown below.**

5. **Press [ENTER].**

   Printing of the test pattern starts.

   The crop marks are printed.

6. **When printing is finished, press [MENU] to go back to the original screen.**

7. **Remove any media.**

   Ensure that the margin from the crop marks to the trailing edge of the media is sufficient.

   P. 350Maximum Area

8. **Complete operations before cutting output for normal cutting with crop marks, such as laminating.**

RELATED LINKS

- P. 62Separating the Media

3. Perform a cutting test.

Procedure

1. **Set up the media for which operations before cutting output, such as lamination, is complete.**

2. **Press [◀] while the following screen is displayed.**

   The cutting carriage comes out over the platen.

3. **Press [◀], [▶], [▲] or [▼] to move the center of the blade over the crop marks.**

   The center of the blade should only be over the crop marks, and does not need to be aligned with the center of the crop marks.

   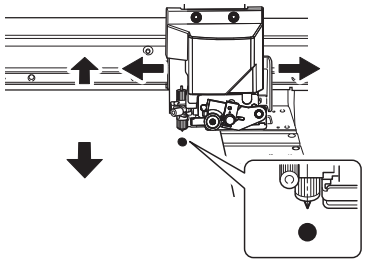

4. **Once the position has been decided, press [FUNCTION] to display the screen shown below.**

5. **Press [ENTER] to confirm your entry.**

   When the screen displays the character "B" together with the printable width at the location (as shown in the following figure), setting is completed.

6. **Press [MENU].**

7. **Press [▲] to display the following screen.**

8. **Press [▶], then [▼] to display the screen shown below.**

9. **Press [▶] twice, and then press [▼] once to display the screen shown below.**

10. **Press [ENTER].**

The cutting test starts.

4. Set the correction values.

Procedure

1. **Press [◀], then [▼][▶] to display the screen shown below.**

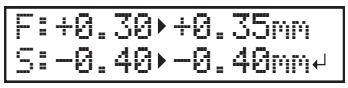

2. **View the results of the cutting test to determine the correction values.**

Check whether the crop mark (shaded part) and the cutting position (outer frame) are aligned. An example of the printing position and the cutting position being misaligned is shown in the following figure.

If the test printed crop marks are inside the cutting line, correction is not necessary.

If the test printed crop marks are extending beyond the cutting line, correction is necessary.

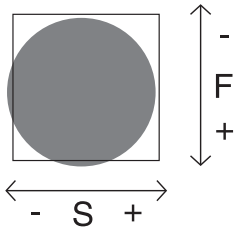

"F" indicates the feed direction of the media (the feed direction) and "S" indicates the direction of print head movement (the scan direction). ("F", "S", "+," "−," and the arrows are not displayed on the actual test pattern.)

MEMO

Determine the values so as to correct the misalignment of the cutting position. In the case of the above figure, feed direction "F" is misaligned in a negative direction and scan direction "S" in a positive direction. Therefore, set the correction values for the feed direction "F" to positive values and the scan direction "S" to negative values. Measure the actual misalignment amount when determining the value.

3. **Set the correction values for the feed direction "F" and scan direction "S".**

(1) **Press [▲] or [▼] to set the correction value for the feed direction "F".**

(2) **Press [◀] or [▶] to set the correction value for the scan direction "S".**

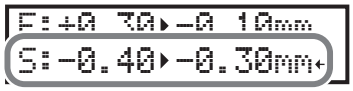

(3) **When you have finished setting the correction values, press [ENTER].**

4. **Perform steps 3 to 10 of 3. Perform a cutting test.(P. 183) again to check whether the correction was successful.**

- If the test printed crop marks are inside the cutting line, correction is complete.
- If the test printed crop marks are extending beyond the cutting line, redo the correction.

MEMO

If the correction was not successful even after using all the printed crop marks, redo the procedure from 2. Print only the crop marks.(P. 182) again.

5. Press [MENU] to return to the original screen.

MEMO

- Default settings
  - "F" (correction value of the media feed direction): 0.00 mm
  - "S" (correction value of the cutting carriage movement direction): 0.00 mm
- You can also make corrections of printing and cutting positions at the same time without removing the media. Refer to the following page.

RELATED LINKS

• P. 176Correcting the Misalignment of Printing and Cutting with Crop Marks (Concurrent Test for Printing and Cutting with Crop Marks)

Correcting the Sensor for Reading Crop Marks

Depending on the characteristics of the media, such as reflectivity and colors, the machine may not be able to read the crop marks. In such cases, correct the sensor for reading crop marks.

1. Correct the sensor for reading crop marks.

Procedure

1. **Set up the media for which the machine has failed to read the crop marks.**

   Use the very media that has already been printed for which the machine has failed to read the crop marks.

2. **Press [MENU].**

3. **Press [▲] to display the following screen.**

```
MENU
CUTTING MENU
```

4. **Press [▶] once, and then press [▼] twice to display the screen shown below.**

```
CUTTING MENU
CROPSENS CALIB.
```

5. **Press [▶] to display the following screen.**

```
CROPSENS CALIB
SENS CALIB.
```

6. **Press [ENTER] to display the following screen.**

```
MOVE CUT TOOL
 TO MARK CENTER
```

7. **Press [◀], [▶], [▲] or [▼] to move the center of the blade over the crop marks.**

   The center of the blade should only be over the crop marks, and does not need to be aligned with the center of the crop marks.

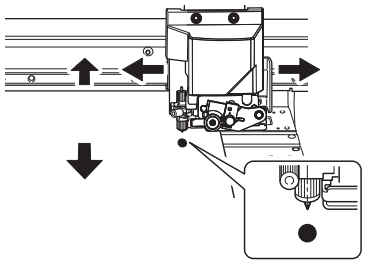

8. **Press [ENTER].**

   If correction succeeds, the following message appears. Proceed to the next step.

```
CALIB. SUCCESS
+ 20%
```

   If correction fails, the following message appears. Take countermeasures and redo the correction.

Message	Cause	Countermeasures
CALIB. FAILED (TOO BRIGHT)	• The lighting in the room where the printer is installed or vicinity of the printer is too bright. • The reflected light from the media is too strong.	• Adjust the brightness of the lighting. • Change the media type.
CALIB. FAILED (TOO DARK)	• The reflection from the media is too weak.	• Change the media type.
CALIB. FAILED TRY AGAIN	• Correction failed for some reason.	• Redo the correction.

If the same message appears even after you redo correction several times, contact your authorized Roland DG Corporation dealer.

9. **Press any one of the keys on the operation panel to display the screen shown below.**

2. Check whether crop marks can be read.

Procedure

1. **Press [▲] to display the following screen.**

```
CROPSENS CALIB◀◆
SENS CHECK      ↵
```

2. **Press [ENTER] to display the following screen.**

```
MOVE CUT TOOL
 TO MARK CENTER↵
```

3. **Press [◀], [▶], [▲] or [▼] to move the center of the blade over the crop marks.**

   The center of the blade should only be over the crop marks, and does not need to be aligned with the center of the crop marks.

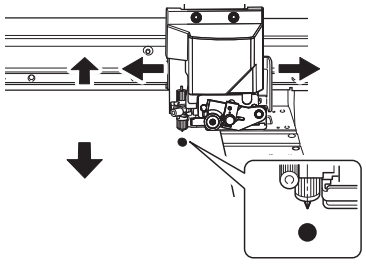

4. **Press [ENTER].**

   Check whether crop marks can be read.

   If reading succeeds, the following message appears. Proceed to the next step.

```
CHECK SUCCESS
MARK FOUND
```

   If reading fails, the following message appears.

```
CHECK FAILED
MARK NOT FOUND
```

   It is possible that crop marks cannot be detected because they are not the crop marks output from the software RIP that is compatible with this machine. Crop marks drawn using drawing software also cannot be detected.

   Use the software RIP that is compatible with this machine to output the crop marks and redo the correction from the start.

   If detection failed even with crop marks output by the compatible software RIP, redo the correction from the sensor correction stage.

5. **Press any one of the keys on the operation panel to display the screen shown below.**

```
CROPSENS CALIB◀◆
SENS CHECK      ↵
```

6. **Press [MENU] to return to the original screen.**

Adjusting the Level of the Sensor for Reading Crop Marks According to the Media

When the sensor for reading crop marks is corrected, the correction value is stored. When using another media, adjust the level of the sensor for reading crop marks, as the correction value may not match.

Procedure

1. Press [MENU].
2. Press [▲] to display the following screen.

3. Press [▶] once, and then press [▼] twice to display the screen shown below.

4. Press [▶], then [▼] to display the screen shown below.

5. Press [▶] twice to display the screen shown below.

6. Press [▲] or [▼] to set the correction value.
7. Press [ENTER] to confirm your entry.
8. Press [MENU] to return to the original screen.

MEMO

Default setting: 0%

Resetting the Level of the Sensor for Reading Crop Marks

When the sensor for reading crop marks is corrected, the correction value is stored. When using another media, reset the level of the sensor for reading crop marks to initial settings, as the correction value may not match.

Procedure

1. Press [MENU].
2. Press [▲] to display the following screen.

3. Press [▶] once, and then press [▼] twice to display the screen shown below.

4. Press [▶], then [▼] to display the screen shown below.

5. Press [▶], then [▼] to display the screen shown below.

6. Press [ENTER] to confirm your entry.
7. Press [MENU] to return to the original screen.

Avoiding Canceling Due to Cleaning during Printing

Cleaning during Printing

This machine counts the hours of printing, and when the accumulated printing hours reach a specified time, automatic cleaning is performed. When cleaning finishes, the accumulated printing time is reset. This cleaning is performed during printing, so print quality may be affected.

To avoid cleaning during printing, first obtain the time until cleaning is performed. Next, use the software RIP to confirm the required time for printing. If the required time for printing is greater than the time until cleaning, perform normal cleaning prior to printing. This will cause the accumulated printing time to be reset. Alternatively, change the print quality to reduce the time required for printing. Either of these methods can be used to prevent cleaning from being performed while printing is in progress.

1. Confirm the accumulated printing time.

Procedure

1. **Press [MENU].**
2. **Press [▼] several times to display the following screen.**

3. **Press [▶] once, and then press [▼] several times to display the screen shown below.**

4. **Press [▶] to display the following screen.**

5. **Press "▲" or "▼" to select "SHOW".**
6. **Press [ENTER] to confirm your entry.**
7. **Load the media to display the screen shown below.**

   The time until cleaning is performed is displayed on the screen after "CL.".

> **MEMO**
>
> Default setting: "HIDE"

2. Confirm the required time for printing.

Use the software RIP to confirm the required time for printing. The following is the method for confirming when using VersaWorks.

Procedure

1. **Display the [Job Settings] window.**

2. **Confirm the required time for printing.**

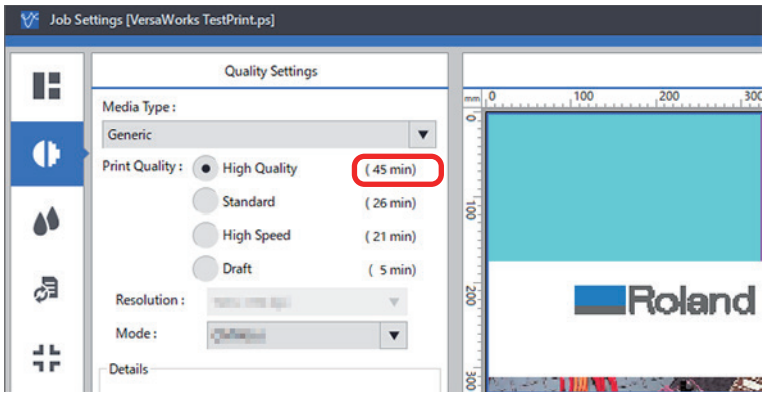

RELATED LINKS

- VersaWorks manual (https://downloadcenter.rolanddg.com/VersaWorks6)

3. Perform normal cleaning.

Check the time until cleaning and the required time for printing, and perform normal cleaning if necessary.

Procedure

1. **Press [FUNCTION].**

2. **Press [▼], then [▶][▼] to display the screen shown below.**

3. **Press [ENTER].**

   The screen shown below appears, and then cleaning starts. The (approximate) remaining time for the procedure is displayed on the screen. (The display shown below is an example. "01:45" = "1 minute and 45 seconds")

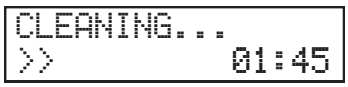

   When finished, the screen shown below appears again.

4. **Press [▲].**

5. **Press [ENTER].**

   Ensure that no dot drop-out or dot displacement occurs.

Optimizing Work Efficiency

Using Presets 196
Saving the Current Settings in Presets 196
Loading and Outputting a Preset 198
Adjusting the Output-start Location 199
Setting the Base Point 199
Reducing Output Time 201
Speeding Up Output for Narrow Media 201
Using the Media Take-up Unit 202
About the Media Take-Up Unit 202
Other Useful Functions 203
Performing Printing Tests Arranged Horizontally 203

Using Presets

Saving the Current Settings in Presets

Using the "PRESET" menu lets you easily change a wide variety of settings to optimize them for the media.

Up to eight types of presets can be saved. You can assign a name to each one. Using media names for these may aid recognition and clarity. Making changes for each menu item every time you change the media can be troublesome. That's why it can be useful to save the menu-item settings optimized for an often-used type of media as a preset. The next time you use the media, you can change the menu-item settings to the optimal values for the media simply by loading the preset you saved.

Procedure

1. **Press [MENU].**

2. **Press [▼] to display the following screen.**

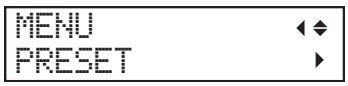

3. **Press [▶] once, and then press [▼] twice to display the screen shown below.**

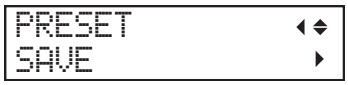

4. **Press [▶] to display the following screen.**

5. **Decide on the preset number.**
   (1) **Press [▲] or [▼] to select one option from "NAME1" to "NAME8".**
   (2) **Press [ENTER] to confirm your entry.**
   The current menu settings are saved, and then the screen shown below appears.

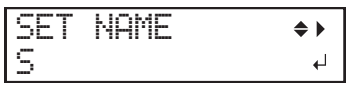

6. **Set the preset name.**
   (1) **Press [▲] or [▼] to select a character.**
   (2) **When you have selected the character you want to enter, press [▶].**
   The characters you can enter are "A" through "Z," "0" through "9," and the "-" character.
   (3) **Press [▲] or [▼] to select the next character.**
   Select the following characters in the same way. You can enter up to 15 characters, including spaces.

   (4) **When you have finished, press [ENTER] to confirm your entry.**

7. **Press [MENU] to return to the original screen.**

The menu items that can be saved in presets are listed below.

Menu item	Reference page
"MEDIA GAP ADJ SIMPLE SETTING"	P. 144Adjusting the Misalignment of the Ink Landing Position
"MEDIA GAP ADJ DETAIL SETTING"	P. 146Accurately Adjusting the Misalignment of the Ink Landing Position
"CALIBRATION"	P. 148Reducing Horizontal Bands (Feed Correction Function)
"EDGE DETECTION"	P. 152Disabling Detection of the Edges of the Media
"VACUUM POWER"	P. 154Using Media That Wrinkles Easily/ Does Not Move Smoothly
"FULL WIDTH S"	P. 201Speeding Up Output for Narrow Media
"FORCE""SPEED""OFFSET""UP-SPEED"	P. 155Fine-tuning the Cutting Conditions
"CALIBRATION" (in the [CUTTING MENU])	P. 164Performing Distance Correction during Cutting
"PRINT-CUT ADJ."	P. 168Correcting the Misalignment of Printing and Cutting
"CROP-CUT ADJ."	P. 176Correcting the Misalignment of Printing and Cutting with Crop Marks (Concurrent Test for Printing and Cutting with Crop Marks) P. 180Correcting the Misalignment of Printing and Cutting with Crop Marks (Separate Test for Printing and Cutting with Crop Marks)
"CROPSENS CALIB."	P. 190Adjusting the Level of the Sensor for Reading Crop Marks According to the Media

Loading and Outputting a Preset

Load a saved preset from among the eight types of presets, and then perform the setup of the media.

Procedure

1. **Press [MENU].**

2. **Press [▼] to display the following screen.**

3. **Press [▶], then [▼][▶] to display the screen shown below.**

4. **Select the preset that you want to load.**
   (1) **Press [▲] or [▼] to select the name of the preset you want to load.**
   (2) **Press [ENTER] to confirm your entry.**
   When the setup of the media has been performed, the screen shown below appears.
   Press [ENTER] again to confirm your entry.

5. **Press [ENTER].**

Adjusting the Output-start Location

Setting the Base Point

Set the base point in order to determine the area on the loaded media in which to print (the output area).

The base point (④) indicates the right edge of the output area (①). (②: Media feed direction, ③: print-head carriage movement direction) You can print without setting the base point, but setting the output area enables you to use media without being wasteful and also to print on the targeted location.

Make this setting for each individual page. When the printing of one page finishes, the base point returns to its default value.

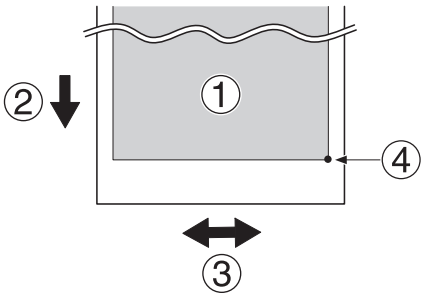

MEMO

- Note that the left and right positions are not restored to their defaults for test patterns.
- If you are using the media take-up unit (sold separately), do not press [▲] after you finish setting up the media. Pressing [▲] will cause the machine to make an emergency stop in order to protect the motor.

Procedure

1. Press [◀] while the following screen is displayed.

The cutting carriage comes out over the platen.

2. Press [◀], [▶], [▲] or [▼] to move the center of the blade to the position that you want to set as the base point.

Only the cutting carriage moves.

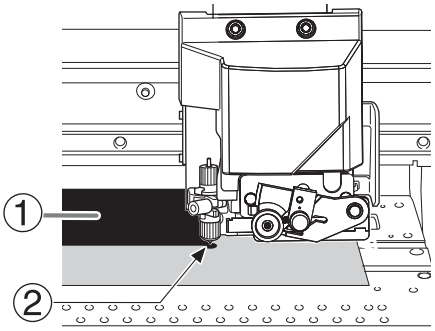

- ①: Output area
- ②: Base point (right edge of the output area)

3. Once the position has been decided, press [FUNCTION] to display the screen shown below.

4. **Press [ENTER] to confirm your entry.**

When the screen displays the character "B" together with the printable width at the location (as shown in the following figure), setting is completed.

Reducing Output Time

Speeding Up Output for Narrow Media

This shortens output time by reducing the width of head movement to the minimum necessary. This is effective when the width of the media or the output data is narrow.

Procedure

1. **Press [MENU].**

2. **Press [▼] several times to display the following screen.**

3. **Press [▶] once, and then press [▼] several times to display the screen shown below.**

4. **Press [▶] to display the following screen.**

5. **Press [▲] or [▼] to select "SHEET" or "OFF".**

"SHEET"	Matches the range of print head movement to the width of the media.
"OFF"	Matches the range of print head movement to the output data. Movement is limited to the minimum amount necessary, and this can be expected to yield the fastest output. Note, however, that because the speed of media movement is no longer constant, colors may be uneven.
"FULL" (Default settings)	Makes the speed of media movement constant at all times and produces the most stable printing result.

6. **Press [ENTER] to confirm your entry.**

7. **Press [MENU] to return to the original screen.**

Using the Media Take-up Unit

About the Media Take-Up Unit

- The media take-up unit (hereinafter referred to as the "take-up unit") is an optional item.
- For information on how to assemble, install, and operate the take-up unit, refer to the take-up unit user's manual.

Other Useful Functions

Performing Printing Tests Arranged Horizontally

When performing printing tests successively, you can select "FEED" (vertical printing) or "SCAN" (horizontal printing) as the print position for the second and later tests in comparison to the first test.

If you are using the optional media take-up unit, printing tests will be printed with the "FEED" orientation regardless of this setting.

Procedure

1. **Press [MENU].**
2. **Press [▼] several times to display the following screen.**

3. **Press [▶], then [▲] to display the screen shown below.**

4. **Press [▶] to display the following screen.**

5. **Press [▲] or [▼] to select "SCAN".**

6. **Press [ENTER] to confirm your entry.**
7. **Press [ENTER] to go back to the original screen.**

MEMO

Default setting: "FEED"

Optimizing Operation Management

Managing the Operations Appropriately and Efficiently 205
Setting the Current Date/Time and Using It for Maintenance 205
Displaying the Amount of Media Remaining 206
Making Sure to Verify the Setting for the Amount Remaining Every Time the Media Is Changed 208
Printing the Amount of Remaining Media 209
Determining What Happens When Ink Runs Out 210
Notifying the User of Ink Exceeding Its Shelf Life 211
Checking the Ink Shelf Life 212
Setting the Activation Interval for Sleep Mode (Power-saving Feature) 213
Deactivating the Sleep Mode (Power-saving Feature) 214
Managing the Basic Settings of the Printer 215
Setting the Menu Language and Units of Measurement 215
Viewing System Information 216
Returning All Settings to Factory Defaults 217

Managing the Operations Appropriately and Efficiently

Setting the Current Date/Time and Using It for Maintenance

Set the current date/time. By setting this, when you perform a printing test the printing test date and time will be printed alongside the printed test pattern.

Procedure

1. Press [MENU].
2. Press [▼] several times to display the following screen.

3. Press [▶] once, and then press [▼] several times to display the screen shown below.

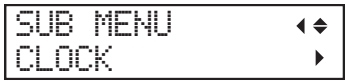

4. Press [▶] to display the following screen.

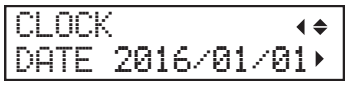

   (1) Press [▶].
   (2) Press [▲] or [▼] to set the year.
   (3) Press [▶].
   (4) Press [▲] or [▼] to set the month.
   (5) Press [▶].
   (6) Press [▲] or [▼] to set the day.

5. Press [ENTER] to confirm your entry.
6. Press [▼] to display the following screen.

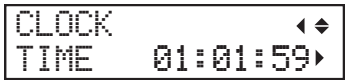

   (1) Press [▶].
   (2) Press [▲] or [▼] to set the hour.
   (3) Press [▶].
   (4) Press [▲] or [▼] to set the minute.
   (5) Press [▶].
   (6) Press [▲] or [▼] to set the second.

7. Press [ENTER] to confirm your entry.
8. Press [MENU] to return to the original screen.

Displaying the Amount of Media Remaining

You can display how much of the media in use is left. By setting the amount of media currently remaining at the start, the amount remaining will be constantly displayed on the screen until it reaches zero.

If you remove the media or cancel media loading by raising the loading lever, the amount remaining at that time flashes on the screen. Because the amount of media remaining is not updated automatically when you change the media, redo the setting whenever you change the media. You can also set the machine to display this menu automatically whenever you change the media.

MEMO

The remaining amount that is displayed is only an estimate. Accuracy is not assured.

Procedure

1. **Press [MENU].**

2. **Press [▼] several times to display the following screen.**

```
MENU                ◀◆
SHEET REMAIN        ▶
```

3. **Press [▶], then [▼] to display the screen shown below.**

```
SHEET REMAIN        ◀◆
SET LENGTH          ▶
```

4. **Press [▶] to display the following screen.**

```
SET LENGTH          ◀◆
  0.0m ▶ 99.9m ↵
```

5. **Press [▲] or [▼] to set the current amount of media remaining.**

```
SET LENGTH          ◀◆
  0.0m ▶ 25.0m ↵
```

6. **Press [ENTER] to confirm your entry.**

7. **Press [MENU] to return to the original screen.**

```
W 736mm   L 25.0m        SETUP SHEET
                         ◀▶ ROLL   L 25.0m
                ①                        ②
```

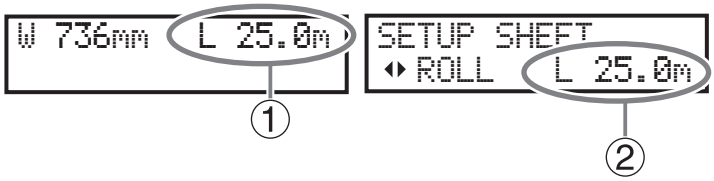

- ①: This display is updated.
- ②: If media has not been loaded, the set value flashes.

MEMO

Default setting: 0.00 m

RELATED LINKS

- P. 208Making Sure to Verify the Setting for the Amount Remaining Every Time the Media Is Changed

Making Sure to Verify the Setting for the Amount Remaining Every Time the Media Is Changed

Set the machine to display the amount of media remaining every time the media is changed.

Setting this menu item to "ENABLE" can keep you from forgetting to redo the setting when you change the media. However, be sure to also set the "EDGE DETECTION" menu item to "ENABLE".

P. 152Disabling Detection of the Edges of the Media

When "EDGE DETECTION" is set to "DISABLE", "SET LENGTH" is not displayed automatically.

Procedure

1. **Press [MENU].**
2. **Press [▼] several times to display the following screen.**

3. **Press [▶], then [▲] to display the screen shown below.**

4. **Press [▶] to display the following screen.**

5. **Press [▲] or [▼] to select "ENABLE".**

6. **Press [ENTER] to confirm your entry.**

   If you select "ENABLE", you must set the "EDGE DETECTION" menu item to "ENABLE".

7. **Press [MENU] to return to the original screen.**

MEMO

Default setting: "DISABLE"

RELATED LINKS

- P. 152Disabling Detection of the Edges of the Media

Printing the Amount of Remaining Media

This prints the amount of media remaining, which is displayed on the top menu.

Use this when you want to make a record of the remaining length of the media currently in use. Printing the amount of media remaining before you change the media enables you to refer to the printed record and use the value to make the setting for the remaining amount the next time you use the media.

Note, however, that if you continue printing, the next printing operation will start on top of the portion where the amount of remaining media is printed. If you want to continue printing, separate the media before starting the next printing operation.

Procedure

1. **Press [MENU].**
2. **Press [▼] several times to display the following screen.**

3. **Press [▶] to display the following screen.**

4. **Press [ENTER].**

   Printing starts.

5. **Press [MENU] to return to the original screen.**

Determining What Happens When Ink Runs Out

This menu lets you determine the operation that takes place when an ink cartridge becomes empty during printing. The print quality will be affected by the selected operation.

Procedure

1. **Press [MENU].**
2. **Press [▼] several times to display the following screen.**

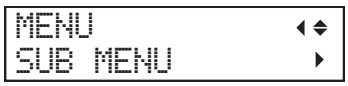

3. **Press [▶].**
4. **Press [▼] several times to display the following screen.**

5. **Press [▶] twice to display the screen shown below.**

6. **Press [▲] or [▼] to select an item.**

"EMPTY MODE"	Description
"STOP" (Default settings)	Printing is paused immediately when an ink cartridge becomes empty. Printing pauses, so colors may be uneven. To prevent uneven colors, ensure that a sufficient amount of ink remains before you begin printing.
"CONT"	A buzzer sounds when an ink cartridge becomes empty. Printing continues until all the data that this machine has received is printed. In this case, it is also possible to press [PAUSE] and pause printing.

7. **Press [ENTER] to confirm your entry.**
8. **Press [MENU] to return to the original screen.**

Notifying the User of Ink Exceeding Its Shelf Life

Use this menu item to set the machine so that a warning message ("INK SHELF LIFE EXPIRE") is displayed on the screen when the ink's shelf life is exceeded.

This message is displayed when the sub power is turned on for the first time after the ink has expired. A buzzer sounds at the same time the message is displayed.

Procedure

1. **Press [MENU].**
2. **Press [▼] several times to display the following screen.**

3. **Press [▶] twice to display the screen shown below.**

4. **Press [▲] or [▼] to select an item.**

"SETTING"	Description
"ENABLE" (Default settings)	The user is notified of ink exceeding its shelf life with a buzzer and a message.
"DISABLE"	The user is not notified of the ink exceeding its shelf life.

5. **Press [ENTER] to confirm your entry.**
6. **Press [MENU] to return to the original screen.**

MEMO

Continuing to use ink that has exceeded its shelf life may lead to the following problems and malfunction. We recommend setting this item to "ENABLE".

- Ink leaks from the ink cartridge.
- The ink viscosity increases, leading to ink discharge issues (which may result in decreased print quality).
- The ink hardens, leading to printer malfunctions.

Checking the Ink Shelf Life

You can use the display to check the shelf lives of the inks in slots 1 to 8.

Procedure

1. **Press [MENU].**
2. **Press [▼] several times to display the following screen.**

3. **Press [▶], then [▼] to display the screen shown below.**

4. **Press [▶] to display the following screen.**
   You can check the shelf lives of the inks.

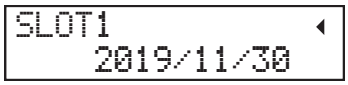

5. **Press [◀].**
6. **Check the shelf lives of the inks in the other slots according to steps 3 and 4.**
7. **Press [MENU] to return to the original screen.**

MEMO

The shelf life items (the expiration year, month, and day) are blank when the ink cartridge's IC chip is broken.

RELATED LINKS

- P. 211Notifying the User of Ink Exceeding Its Shelf Life

Setting the Activation Interval for Sleep Mode (Power-saving Feature)

This setting is used to set how long it should take until the machine goes into sleep mode (the state in which the power-saving feature is working) when no print data is received and no operations are performed for a continued length of time.

Procedure

1. **Press [MENU].**
2. **Press [▼] several times to display the following screen.**

3. **Press [▶].**
4. **Press [▼] several times to display the following screen.**

5. **Press [▶] twice to display the screen shown below.**

6. **Press [▲] or [▼] to set the time.**
7. **Press [ENTER] to confirm your entry.**
8. **Press [MENU] to return to the original screen.**

MEMO

- Default setting: 30 Minutes
- When "SLEEP SETTING" is set to "DISABLE", the machine does not switch to sleep mode, so this setting is ignored.

RELATED LINKS

- P. 214Deactivating the Sleep Mode (Power-saving Feature)

Deactivating the Sleep Mode (Power-saving Feature)

This setting is used to set the machine so that it never goes into sleep mode (the state in which the power-saving feature is working) when no print data is received and no operations are performed for a continued length of time.

Procedure

1. **Press [MENU].**
2. **Press [▼] several times to display the following screen.**

3. **Press [▶].**
4. **Press [▼] several times to display the following screen.**

5. **Press [▶], then [▼] to display the screen shown below.**

6. **Press [▶] to display the following screen.**

7. **Press [▲] or [▼] to select an item.**

"SETTING"	Description
"ENABLE" (Default settings)	The sleep mode is activated after a certain period of time.
"DISABLE"	The sleep mode is not activated.

8. **Press [ENTER] to confirm your entry.**
9. **Press [MENU] to return to the original screen.**

RELATED LINKS

- P. 213Setting the Activation Interval for Sleep Mode (Power-saving Feature)

Managing the Basic Settings of the Printer

Setting the Menu Language and Units of Measurement

This feature sets the language and units of measurement displayed on the display screen of the operation panel.

Procedure

1. **Hold down [MENU] and switch on the sub power.**
2. **Press [▲] or [▼] to select the display (menu) language.**

3. **Press [ENTER] to confirm your entry.**
4. **Press [▲] or [▼] to select the measurement unit for length.**

5. **Press [ENTER] to confirm your entry.**
6. **Press [▲] or [▼] to select the measurement unit for temperature.**

7. **Press [ENTER] to confirm your entry.**

MEMO

Default settings

- "MENU LANGUAGE": ENGLISH
- "LENGTH UNIT": mm
- "TEMP UNIT": °C

Viewing System Information

This is a method for viewing system information of this machine, such as serial number and ink type.

Procedure

1. **Press [MENU].**

2. **Press [▼] several times to display the following screen.**

You can check the following information:

- "MODEL": Model name
- "SERIAL NO.": Serial number
- "INK": Ink type
- "FIRMWARE": Firmware version
- "NETWORK": Network settings such as the IP address

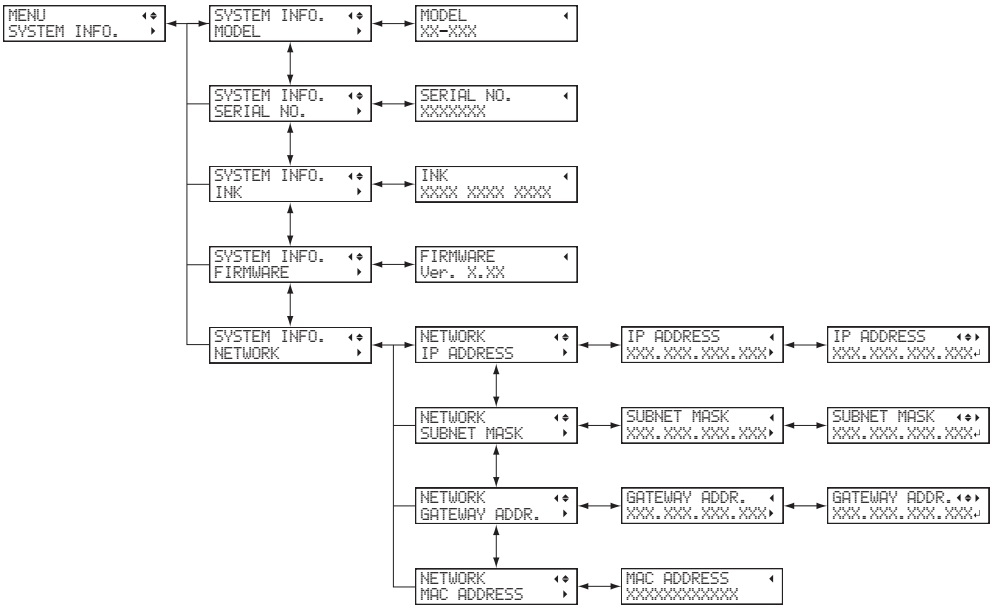

MEMO

- For information on how to set up a network, see the "Setup Guide."

RELATED LINKS

- MG-640 Setup Guide (https://downloadcenter.rolanddg.com/MG-640)

Returning All Settings to Factory Defaults

This menu returns all settings to the same as their factory defaults.

The settings for "MENU LANGUAGE", "LENGTH UNIT", and "TEMP UNIT" are not returned to their factory default values.

Procedure

1. **Press [MENU].**
2. **Press [▼] several times to display the following screen.**

3. **Press [▶] once, and then press [▼] several times to display the screen shown below.**

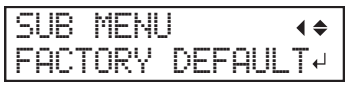

4. **Press [ENTER] to confirm your entry.**

Maintenance

Introduction

Important Notes on Handling and Use 220
Printer 220
Ink Cartridges 220
Basic Maintenance Knowledge 222
Types and Timing of Maintenance 222
Automatic Maintenance Feature and Notes 223
Measures When the Printer Is Not in Use for a Prolonged Period 224

Important Notes on Handling and Use

Printer

- **This machine is a precision device.**
  - Never subject the machine to impacts or excessive force.
  - Never needlessly put your hand or fingers inside the cover, the ink-cartridge ports, or other internal areas of the machine.
- **Install in a suitable location.**
  - Install the machine in a location having the specified temperature and humidity.
  - Install the machine in a quiet, stable location offering good operating conditions.
- **The print heads and the UV-LED device are delicate devices.**
  - Never needlessly touch or allow the object to be printed on to scrape them. Failure to handle these items with care may cause damage.
  - The print heads may be damaged if allowed to dry out. The machine prevents desiccation automatically, but improper operation may render this feature inoperative. Operate the machine properly, as specified in this manual.
  - Never leave the machine with an ink cartridge removed. Remaining ink in the printer may harden and clog the print heads.
  - Daily maintenance as well as various types of maintenance depending on the status must be performed. Read this manual thoroughly and perform the appropriate maintenance at the appropriate times.
  - The print heads are components that wear out. Periodic replacement is required, with the frequency of replacement depending on use.

Ink Cartridges

⚠ WARNING

Never store ink, cleaning liquid, or discharged fluid in any of the following locations.

- **Any location exposed to open flame**
- **Any location where high temperature may occur**
- **Near bleach or any other such oxidizing agent or explosive material**
- **Any location within the reach of children**

Fire may be a danger. Accidental ingestion by children may pose a health hazard.

- **Ink cartridges come in various types.**
  - Use a type that is compatible with the printer. Also, be sure to use only genuine items from Roland DG Corporation.
- **Never subject to impact or attempt to disassemble.**
  - Never drop the ink cartridges or shake them forcefully. The impact may rupture the internal pouch and cause the ink to leak.
  - Never attempt to disassemble the ink pouches.
  - Never attempt to refill the ink.
  - If ink gets on your hands or clothing, wash it off as soon as possible. Removal may become difficult if you leave such adhered ink untreated.
- **Storage**

- Use up the ink before the expiration date printed on the ink cartridge.
- Store the ink cartridges in a location that is not subject to direct sunlight or strong illumination.
- Store the ink cartridges unopened in a well-ventilated location at a temperature of 5°C (41°F) or higher and less than 40°C (104°F) and a relative humidity of 20 to 80%RH.

Basic Maintenance Knowledge

Types and Timing of Maintenance

To use this machine under its optimal conditions, it is important to perform the appropriate maintenance at the appropriate times.

Regular Maintenance

These are the maintenance items that are required on a daily basis.

Timing	Category	Item
Before daily operations	Maintenance of ink cartridges	P. 229Maintenance of Ink Cartridges
	Cleaning of the print heads	P. 230Printing Tests and Normal Cleaning
During and after daily operations	Cleaning the machine	P. 226Cleaning the Machine
	Manual cleaning	P. 232Manual Cleaning
If the discharged fluid disposal message appears	Disposing of discharged fluid	P. 252If the Discharged Fluid Disposal Message Appears
Once a month	Cleaning the UV-LED device	P. 244How to Clean the UV-LED Devices

Advanced Maintenance

These maintenance methods consume a large amount of ink. Thoroughly read the explanation, and then perform the operation at the appropriate point in time.

Timing	Category	Item
When dot drop-out or dot displacement occurs	Cleaning of the print heads	P. 230Printing Tests and Normal Cleaning
		P. 255Medium Cleaning Method
		P. 257Powerful Cleaning Method
		P. 260Manual Cleaning Method
When the white ink concentration drops	Eliminating drops in ink concentration	P. 273Light Choke Cleaning Method
When manual cleaning is not effective	Eliminating uneven colors, dot drop-out, and dot displacement	P. 279Handling Severe Dot Drop-out, Dot Displacement, and Uneven Colors

Replacing Consumable Parts

These items are for replacement of consumable parts. Thoroughly read the explanation, and then perform the operation at the appropriate point in time.

Timing	Category	Item
When a replacement message appears	Replacing consumable parts • Wiper • Felt wiper • Blade • Separating knife	P. 287Replacing the Wiper
		P. 291Replacing the Felt Wiper
When a cutting edge becomes dull		P. 294Replacing the Blade
		P. 301Replacing the Separating Knife

Automatic Maintenance Feature and Notes

This machine has a feature that automatically performs maintenance periodically.

This function performs operations for preventing the print heads from drying out, so:

- **Always keep the main power switched on.**
- **Do not leave the front cover open for a long time.**
- **Return to the top menu after specifying settings in the menus.**

Measures When the Printer Is Not in Use for a Prolonged Period

Be sure to follow the instructions shown below when the printer is not in use for a prolonged period.

- **Empty the drain bottle.**

  If you know that you will not use the machine for a prolonged period, empty the drain bottle. When the main power is on, the machine periodically performs automatic maintenance in which fluid is discharged.

  The drain bottle is filled when the following periods elapse. To perform automatic maintenance, discard the discharged fluid during these periods.

  - Approximately 3 weeks after the message "EMPTY DRAIN BOTTLE" is displayed
  - Approximately 300 days after the drain bottle is emptied
- **Switch the sub power on once every two weeks.**

  Switch the sub power on once every two weeks. Check for notifications and perform the required maintenance.
- **Keep the machine at a constant temperature and relative humidity.**

  Even when the machine is not in use, keep it at a temperature of 5 to 40°C (41 to 104°F) and a relative humidity of 20 to 80% (with no condensation). Failure to do so may result in malfunction.

RELATED LINKS

- P. 252If the Discharged Fluid Disposal Message Appears

Regular Maintenance

Cleaning the Machine 226
Cleaning the Media Path 226
Cleaning the Cutting Carriage Roller 228
Maintenance That Must Be Performed Daily 229
Maintenance of Ink Cartridges 229
Printing Tests and Normal Cleaning 230
Manual Cleaning 232
Cleaning That Must Be Performed Once a Month or More 243
When UV-LED Device Cleaning Is Necessary 243
How to Clean the UV-LED Devices 244

Cleaning the Machine

Cleaning the Media Path

Wipe away any ink or grime on the media path and other areas as part of the daily cleaning procedure. It is easy for ink or grime to affix to the media path, and, if left unattended, this will contaminate new media and have a negative effect on the transport of media when it is output. Pinch rollers, grit rollers, and the platen are particularly prone to the buildup of grime.

⚠ WARNING

Never use a solvent such as gasoline, alcohol, or thinner to perform cleaning.
Doing so may cause a fire.

⚠ CAUTION

Before attempting cleaning, switch off the sub power and wait until the UV-LED device cools (approximately 15 minutes).
Sudden movement of the machine may cause injury, or hot components may cause burns.

IMPORTANT

- This machine is a precision device and is sensitive to dust and dirt. Perform cleaning on a daily basis.
- Never attempt to oil or lubricate the machine.

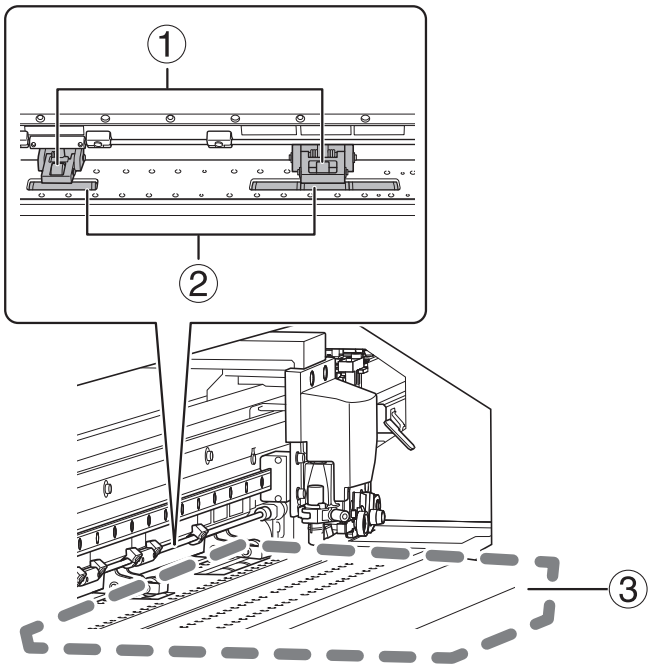

Clean by wiping with a cloth moistened by neutral detergent diluted with water then wrung dry.

①	Pinch roller	These are the positions where the media is fixed in place or transported, so it is easy for ink and grime to affix to these positions. Failure to clean this part properly may result in the transfer of grime to the surface of media.
②	Grit roller	These are the positions where the media is fixed in place or transported, so it is easy for grime to affix to these positions. Remove buildup of media scraps and other material using a brush. Never use a metal brush.

③	Platen	Wipe away any buildup of ink, grime, or cut media on the media path and in the grooves.

Cleaning the Cutting Carriage Roller

Paper dust affixes to the separating knife carriage roller during media separation. Periodically wipe the area clean.

⚠ WARNING

Never use a solvent such as gasoline, alcohol, or thinner to perform cleaning.
Doing so may cause a fire.

⚠ CAUTION

Before attempting cleaning, switch off the sub power and wait until the UV-LED device cools (approximately 15 minutes).
Sudden movement of the machine may cause injury, or hot components may cause burns.

IMPORTANT

- This machine is a precision device and is sensitive to dust and dirt. Perform cleaning on a daily basis.
- Never attempt to oil or lubricate the machine.

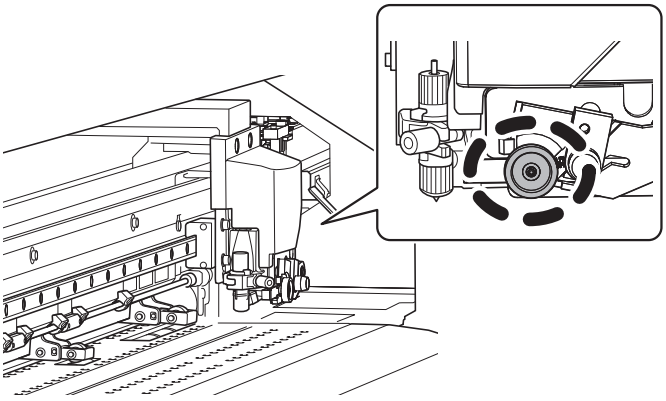

Clean by wiping with a cloth moistened by neutral detergent diluted with water then wrung dry.

Maintenance That Must Be Performed Daily

Maintenance of Ink Cartridges

The precipitation of the ingredients in the ink disables printing in normal color. So that the ink mixes well, shake the ink cartridge horizontally with a stroke length of around 5 cm (2 in.) from each end of the ink cartridge.

- Remove the white ink cartridge, shake it 50 times (about 20 seconds), and then reinsert this cartridge.
- The ink cartridges for colors other than white do not need to be shaken before every operation, but be sure to shake them when installing new ones.

The ingredients in white ink tend to settle. Each day, before starting the day's operations, be sure to shake this cartridge. Allowing the ink to stand without carrying out these steps can cause the settled material to harden, resulting in malfunction or other problems.

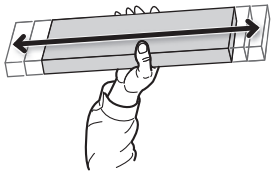

IMPORTANT

- Before shaking the ink cartridge, wipe off any ink from around its mouth. If you do not wipe off the ink, it may splatter when you shake the ink cartridge.
- When you have finished mixing the ink, reattach the ink cartridge immediately. Taking time to reattach the ink cartridge will adversely affect the ink path.
- Even if you are not using the printer, shake the white ink cartridge 50 times (about 20 seconds) once a week.

Printing Tests and Normal Cleaning

1. Perform a printing test.

Before you carry out actual printing, perform a printing test to ensure no dot drop-out or dot displacement occurs. If dot drop-out or dot displacement occurs, perform cleaning of the print heads (normal cleaning).

MEMO

- This operation is unnecessary if you will only perform cutting.
- When performing printing tests successively, you can select "FEED" (vertical printing) or "SCAN" (horizontal printing) as the print position for the second and later tests in comparison to the first test.

Procedure

1. **Load the media.**
   P. 30Setup of Media
2. **Press [FUNCTION].**
3. **Press [▼], then [▶] to display the screen shown below.**

4. **Press [ENTER].**
   Printing of the test pattern starts.
5. **Check whether there is dot drop-out or dot displacement in the test pattern.**
   Missing blocks indicate dot drop-out. Collapsed or inclined blocks indicate dot displacement.

   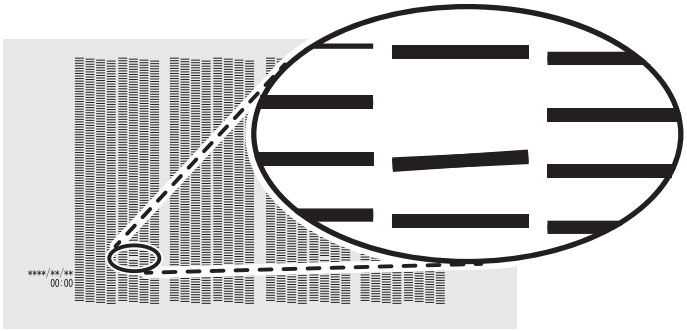
6. **If you have opened the front cover, close it.**
   If no dot drop-out or dot displacement occurs, this operation is finished. Press [FUNCTION] to go back to the original screen.

RELATED LINKS

- P. 203Performing Printing Tests Arranged Horizontally

2. Perform normal cleaning.

Procedure

1. **Press [▼] to display the following screen.**

2. **Press [ENTER].**

   The screen shown below appears, and then cleaning starts. The (approximate) remaining time for the procedure is displayed on the screen. (The display shown below is an example. "01:45" = "1 minute and 45 seconds")

   When finished, the screen shown below appears again.

3. **Press [▲].**

4. **Press [ENTER].**

   Perform a printing test again to check whether the dot drop-out and dot displacement have been corrected.

5. **Check to make sure the dot drop-out or dot displacement has been corrected.**

   If the problem persists, try performing normal cleaning again. If the printer has been used for a long period, dot drop-outs may not be fixed even after performing normal cleaning two or three times. If this is the case, clean using a different method.

RELATED LINKS

- P. 255When Normal Cleaning Is Not Effective

Manual Cleaning

Be sure to perform manual cleaning after daily operations are finished.

1. Clean the print heads.

Procedure

1. **Remove any media.**
2. **Remove the media clamps.**
3. **Press [FUNCTION].**
4. **Press [▶].**
5. **Press [▼] several times to display the following screen.**

6. **Press [ENTER].**

   When the media clamp removal message is displayed, press [ENTER] again. After "NOW PROCESSING.." is displayed, the screen shown below appears.

   Also, the print head moves to the left end of the platen.

IMPORTANT

Do not press [ENTER] at this stage. Press [ENTER] after cleaning is complete. If you press [ENTER] at this stage, wait for the screen to change as shown in the following figure, and then press [ENTER] again.

7. **Open the front cover.**
8. **Open the left covers (top and bottom).**

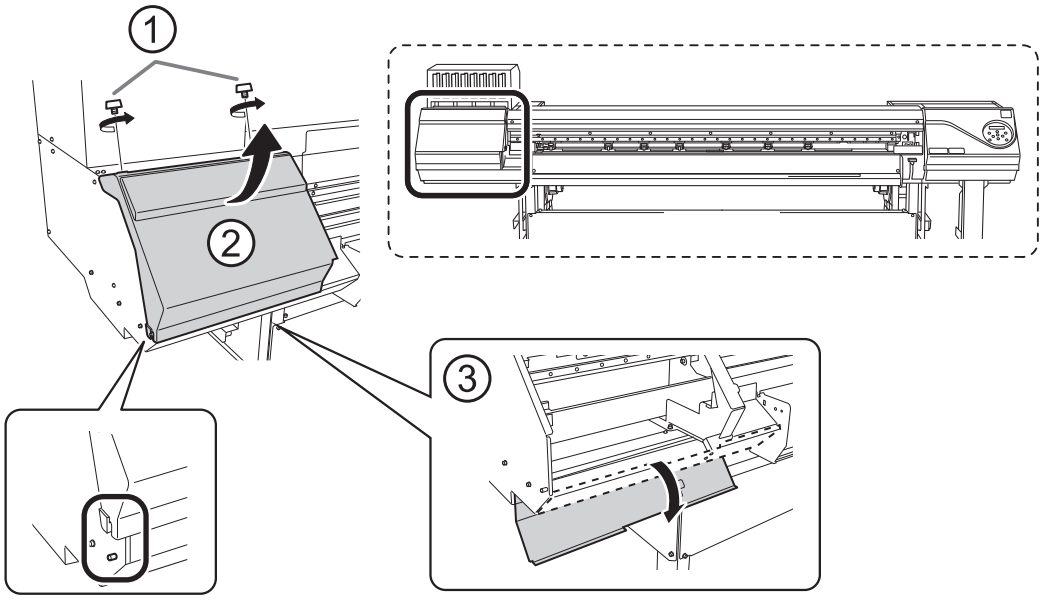

9. Touch the location shown in the figure to discharge any static electricity.

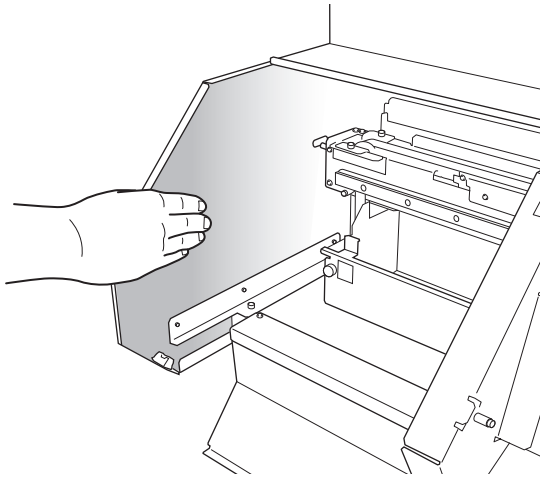

10. Remove the cut rail.

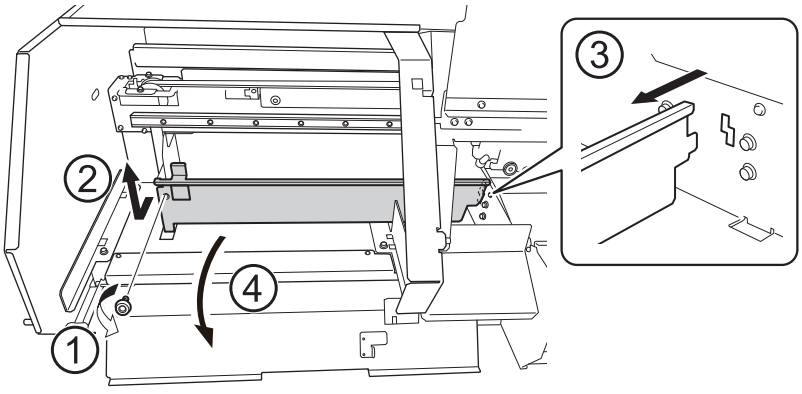

11. Move the print-head carriage to the left end.

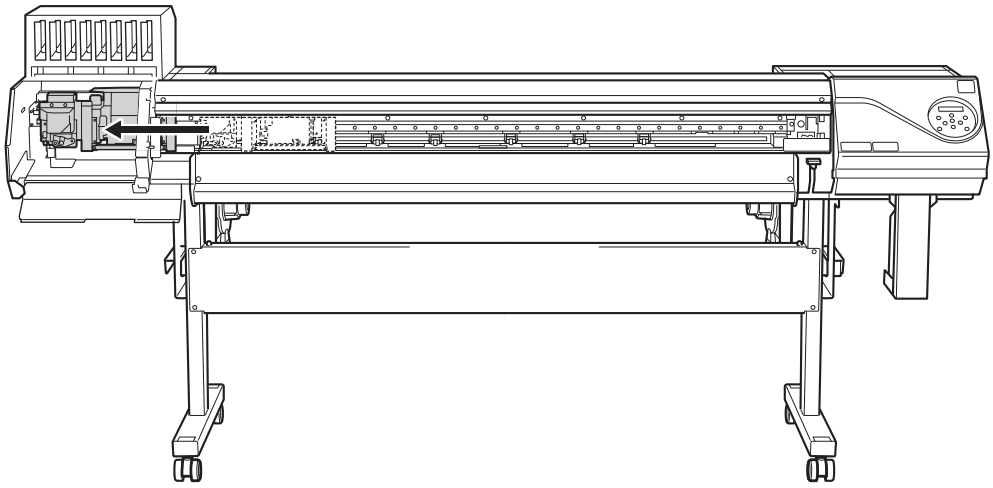

Move the print-head carriage by hand.

⚠ CAUTION

When moving the print-head carriage by hand, be sure to hold the specified position.
Moving it by holding positions other than those specified may deform and damage the cover.

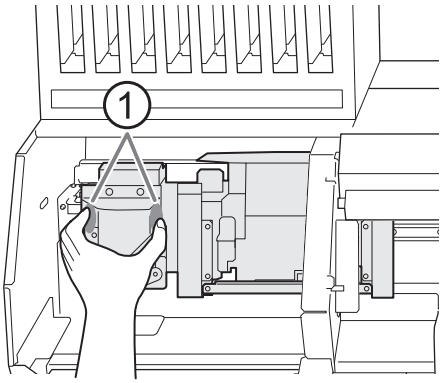

①: Position to hold with your hand

12. Apply a large amount of cleaning liquid to the cleaning stick.

IMPORTANT

Be sure to use one of the included cleaning sticks.

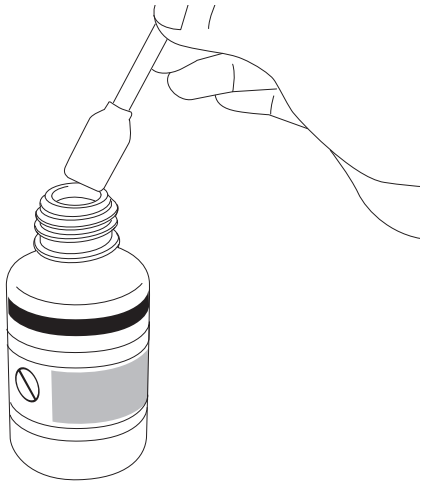

13. **Clean the locations shown in the following figure.**

Be especially careful to clean away any fibrous dust (lint).

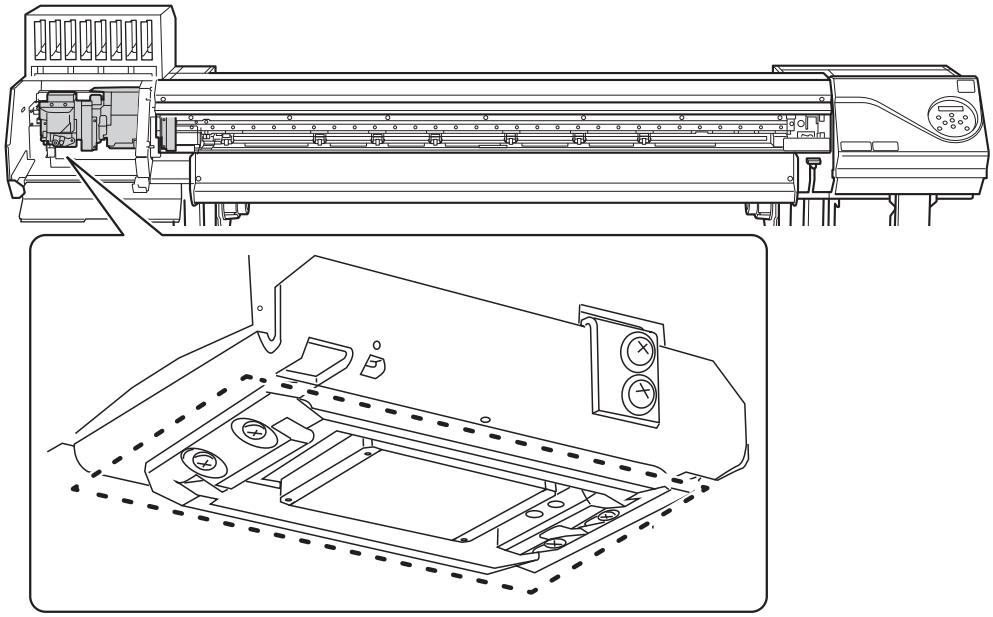

(1) **Use the wide surface of the cleaning stick to wipe off the left side. Then, use the opposite surface (which is not dirty) to wipe off the right side.**

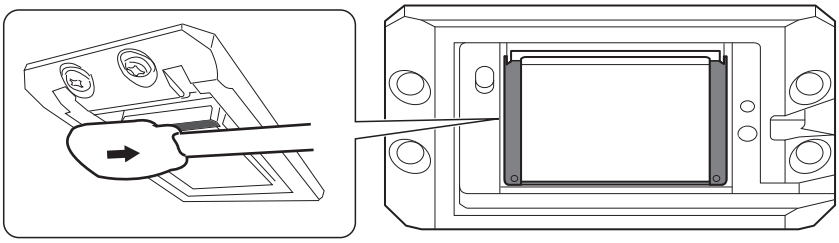

(2) **Stand the cleaning stick upright and wipe off the left side. Then, use the opposite surface to wipe off the right side.**

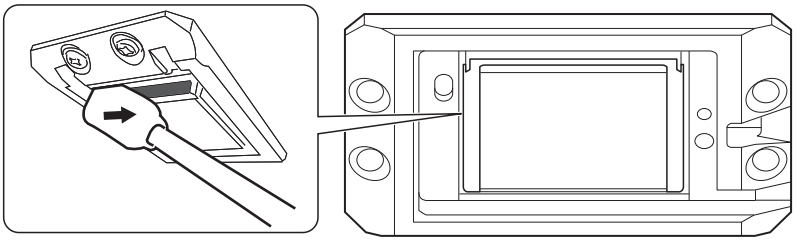

(3) **Use the wide surface of the cleaning stick to wipe away any dirt from the area shown in the figure.**

If this area has any ink or cleaning liquid that appears likely to drip, use a dry cloth that is not fluffy to gently wipe away the ink or cleaning liquid.

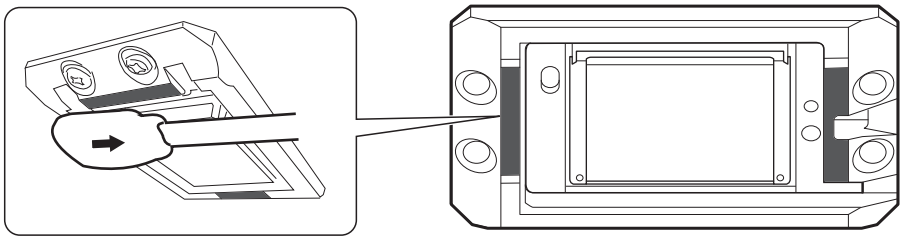

14. **When you have finished cleaning, move the print-head carriage to above the platen.**

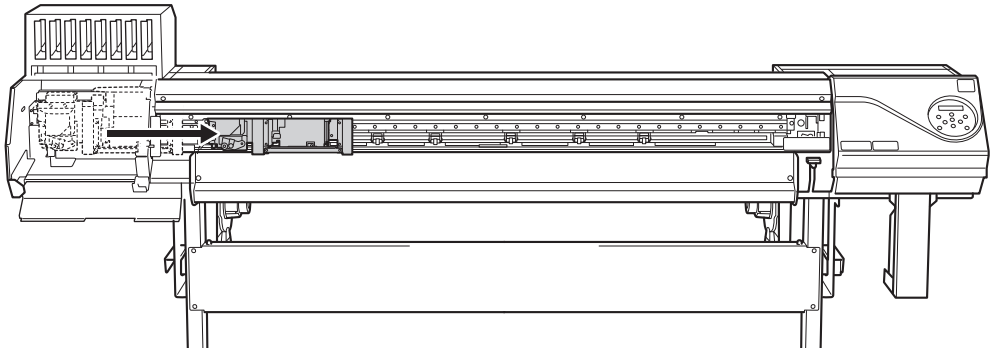

Move the print-head carriage by hand.

⚠ CAUTION

When moving the print-head carriage by hand, be sure to hold the specified position.

Moving it by holding positions other than those specified may deform and damage the cover.

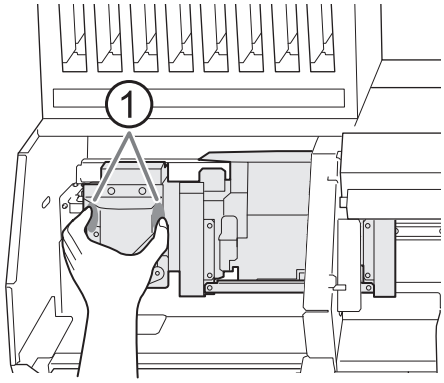

①: Position to hold with your hand

15. **Attach the cut rail.**

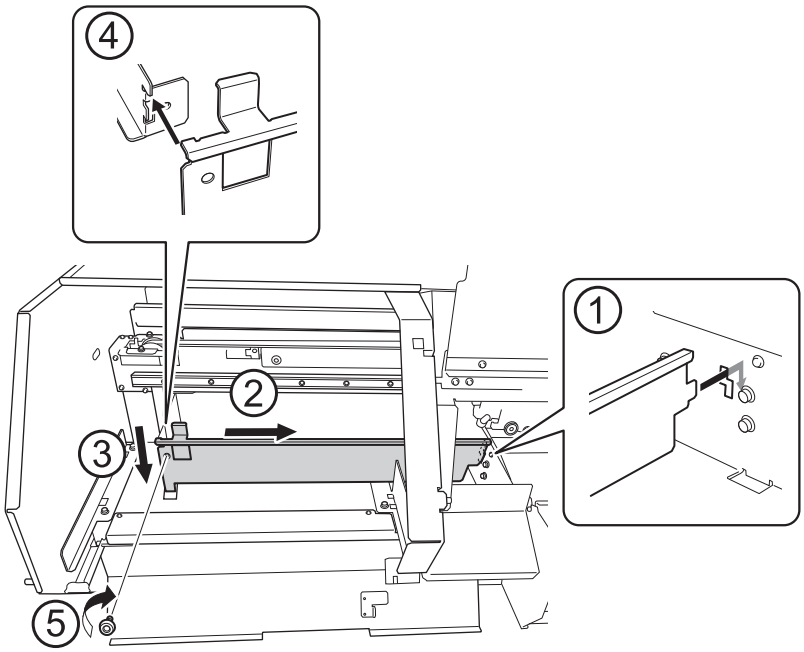

16. Close the left covers (top and bottom).

2. Clean the print head caps.

Procedure

1. **Open the right cover.**

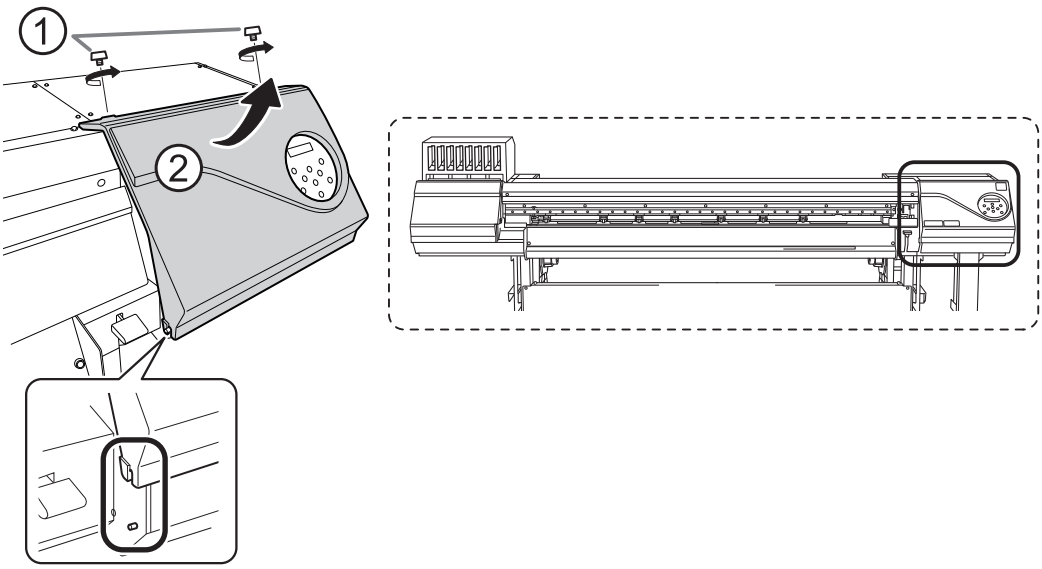

2. **Clean the locations shown in the following figure.**

Be especially careful to clean away any fibrous dust (lint).

(1) **After wiping off the hooked side of the wiper (a) with a cleaning stick, wipe off the opposite side (b).**

(2) **Wipe off the area in the figure with a cleaning stick.**

(3) **Use the wide surface of the cleaning stick, and then shift it to a different location, pressing the cleaning stick against the location to absorb the dirt there.**

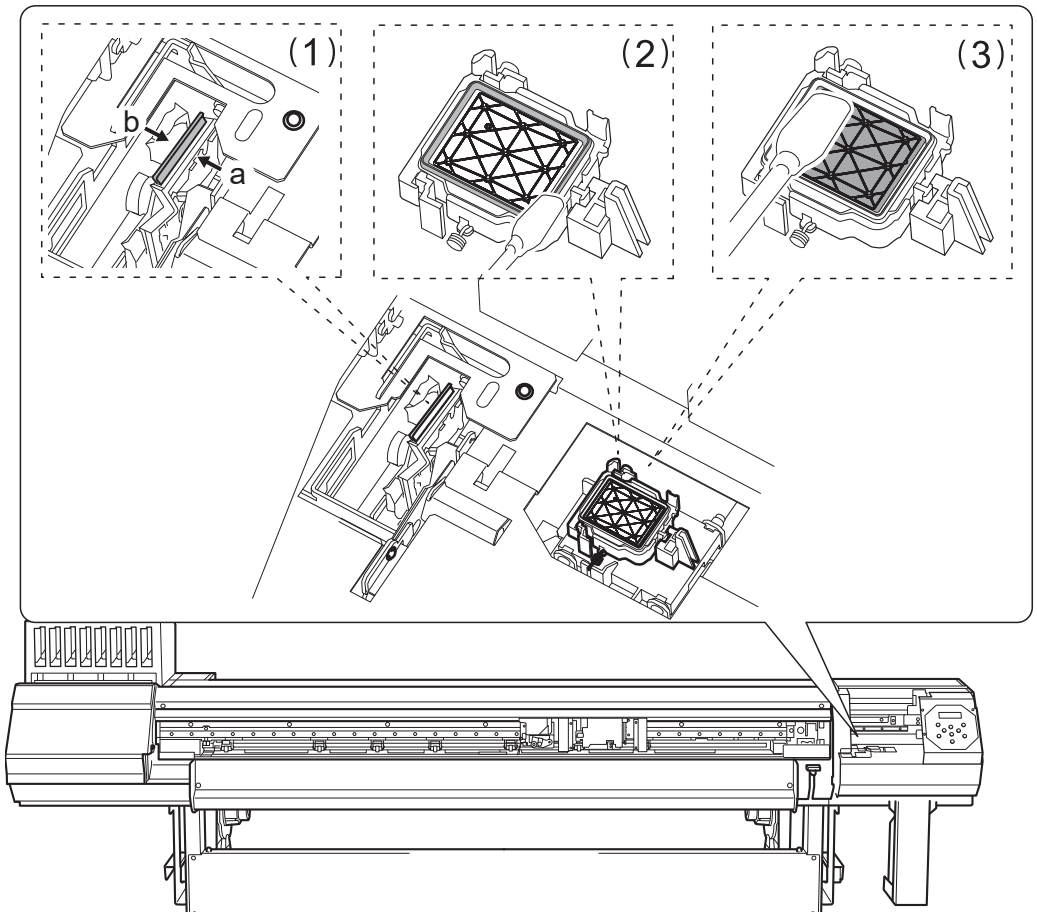

3. **Remove any hardened ink on top of the print head caps.**

Use a pair of tweezers to remove the pieces of hardened ink that are 3 mm (0.12 in.) or more in length.

IMPORTANT

Do not use excessive force when pulling on pieces of hardened ink that are difficult to remove. Doing so may damage the print head caps.

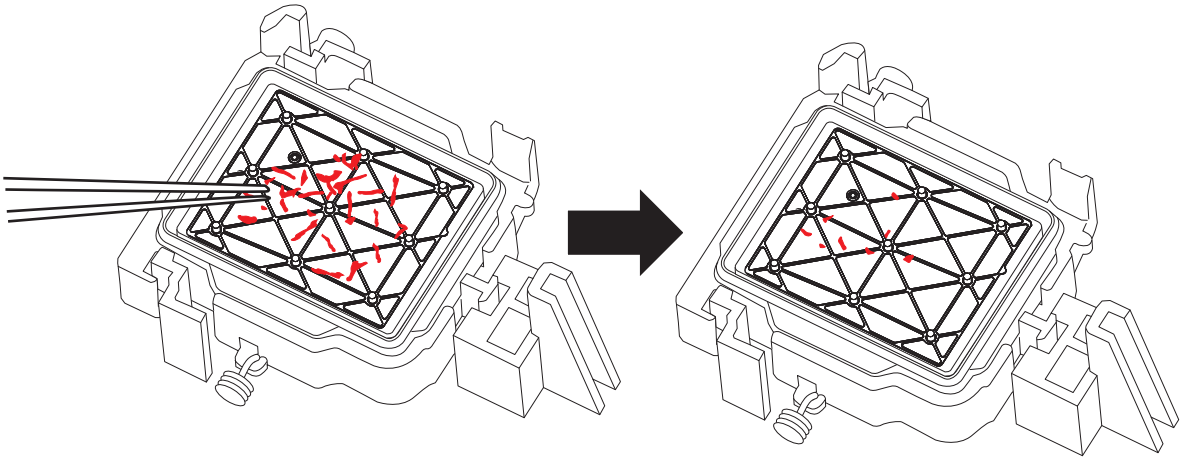

4. **Close the right cover.**

5. **Close the front cover.**

6. **Press [ENTER].**

The screen shown below appears, and then cleaning starts. The (approximate) remaining time for the procedure is displayed on the screen. (The display shown below is an example. "01:45" = "1 minute and 45 seconds")

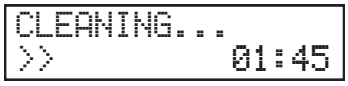

When cleaning finishes, the screen shown below appears again.

7. **Press [FUNCTION] to return to the original screen.**

3. Perform a printing test to check the results.

Procedure

1. **Load the media.**
   P. 30Setup of Media
2. **Press [FUNCTION].**
3. **Press [▼], then [▶] to display the screen shown below.**

4. **Press [ENTER].**
   Printing of the test pattern starts.
5. **Check whether there is dot drop-out or dot displacement in the test pattern.**
   Missing blocks indicate dot drop-out. Collapsed or inclined blocks indicate dot displacement.

   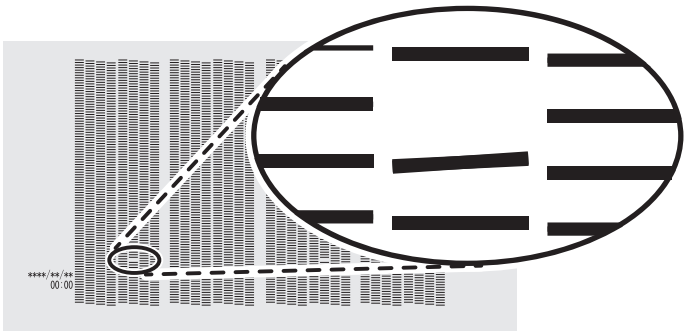
6. **If you have opened the front cover, close it.**
   If no dot drop-out or dot displacement occurs, this operation is finished. Press [FUNCTION] to go back to the original screen.

If dot drop-out or dot displacement is present, perform cleaning such as normal cleaning.

RELATED LINKS

- P. 230Printing Tests and Normal Cleaning
- P. 255Medium Cleaning Method
- P. 257Powerful Cleaning Method

4. Consumable Products and Parts Related to Manual Cleaning

The cleaning sticks, cleaning liquid, and print heads are consumable products or consumable parts.

- If you use up the cleaning sticks and cleaning liquid used for manual cleaning, contact your authorized Roland DG Corporation dealer or visit our website (https://www.rolanddg.co.jp/).
- The print heads are components that wear out. Periodic replacement is required, with the frequency of replacement depending on use. Contact your authorized Roland DG Corporation dealer.

Cleaning That Must Be Performed Once a Month or More

When UV-LED Device Cleaning Is Necessary

The UV-LED devices are important components for ink adhesion. They require periodic and appropriate maintenance. It is important to clean the UV-LED devices with the appropriate timing.

Once a month or more

To keep a stable printing condition at all times, perform cleaning once a month or more.

When there is a lot of scattered ink mist and the inside of the machine is soiled

Perform this cleaning every day when frequently printing with the print heads at a distance from the print surface or when ink is emitted to locations that protrude from the print surface. If the scattered ink mist is allowed to harden, it may cause malfunctions.

When the bases and irradiation windows of the UV-LED devices are dirty (see the following figure).

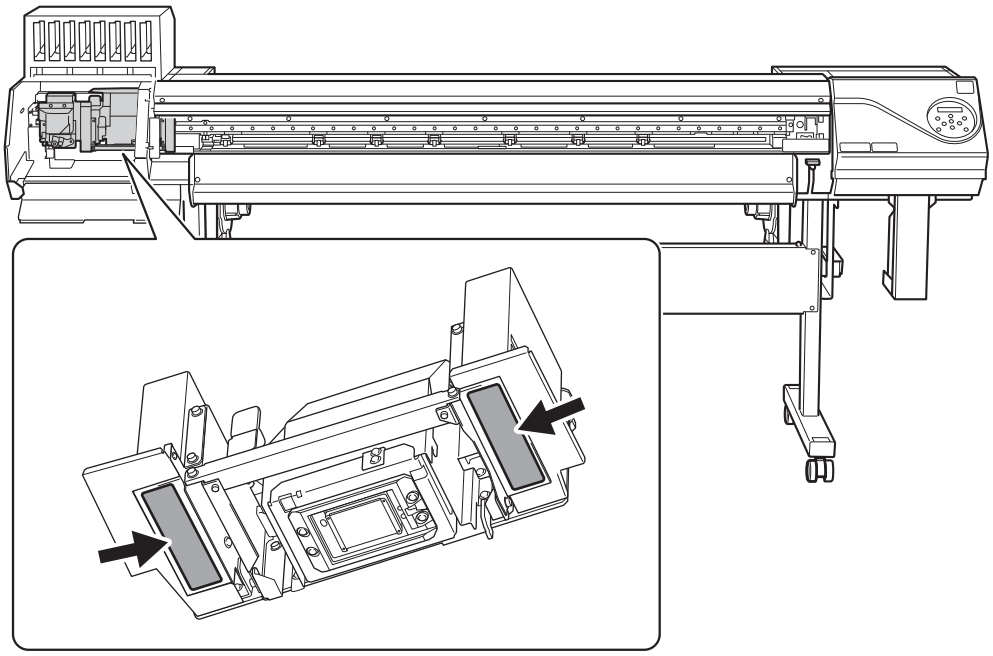

MEMO

- The frequency with which UV-LED device cleaning is required depends on the machine's use. For information about the frequency of cleaning needed for your conditions of use, contact your authorized Roland DG Corporation dealer.
- For hardened ink and other such dirt that cannot be completely cleaned away, contact your authorized Roland DG Corporation dealer.

How to Clean the UV-LED Devices

IMPORTANT

Important notes on this procedure

- Before attempting this operation, remove any media.
- To prevent the print heads from drying out, finish this procedure in 10 minutes or less. A warning beep sounds after 10 minutes.
- The cloths, alcohol, and similar items used in cleaning are not included with the product.

When a warning beep sounds during cleaning

- A warning beep sounds 10 minutes after operation starts. Stop work, close all the covers, and then press [ENTER] to end the manual cleaning mode. After that, restart the procedure from the beginning.

Required items	
	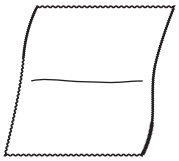
Anhydrous ethanol or isopropyl alcohol	Cloth (that is not fluffy)

⚠ CAUTION

Do not perform cleaning immediately after printing has finished. (Wait approximately 15 minutes after printing finishes.)

The area around the UV-LED device is hot and may cause burns.

⚠ CAUTION

When using anhydrous ethanol or isopropyl alcohol, be sure to follow the product's usage precautions.

Exercise caution regarding items such as fire, ventilation, and rashes.

⚠ CAUTION

Only use anhydrous ethanol or isopropyl alcohol.

Using chemicals (or similar substances) other than anhydrous ethanol or isopropyl alcohol may lead to UV-LED device damage.

⚠ CAUTION

Use cloth that is not fluffy to wipe off the parts. Do not use a hard material such as metal.

Using cloth that is fluffy or a hard material such as metal may lead to UV-LED device damage.

Procedure

1. **Remove any media.**
2. **Remove the media clamps.**

3. Press [FUNCTION].

4. Press [▶].

5. Press [▼] several times to display the following screen.

6. Press [ENTER].

When the media clamp removal message is displayed, press [ENTER] again. After "NOW PROCESSING.." is displayed, the screen shown below appears.

Also, the print head moves to the left end of the platen.

IMPORTANT

Do not press [ENTER] at this stage. Press [ENTER] after the work is complete. If you press [ENTER] at this stage, wait for the screen to change as shown in the following figure, and then press [ENTER] again.

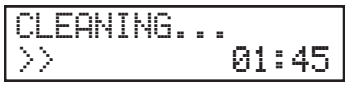

7. Open the front cover.

8. Open the left covers (top and bottom).

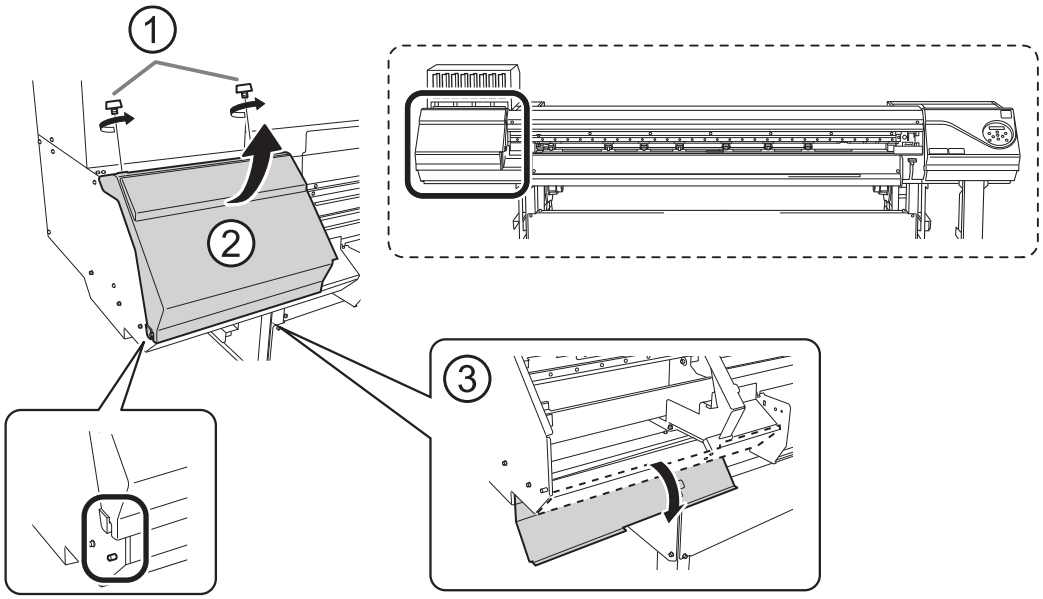

9. Touch the location shown in the figure to discharge any static electricity.

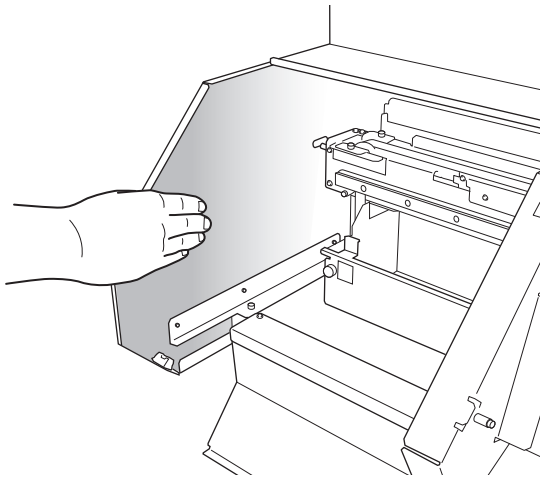

10. **Remove the cut rail.**

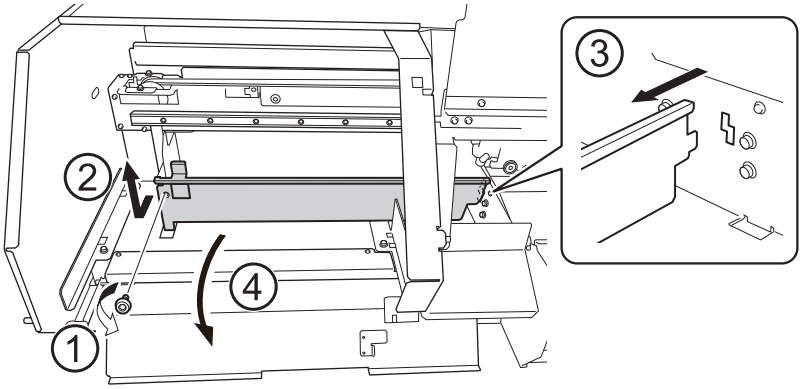

11. **Move the print-head carriage to the left end.**

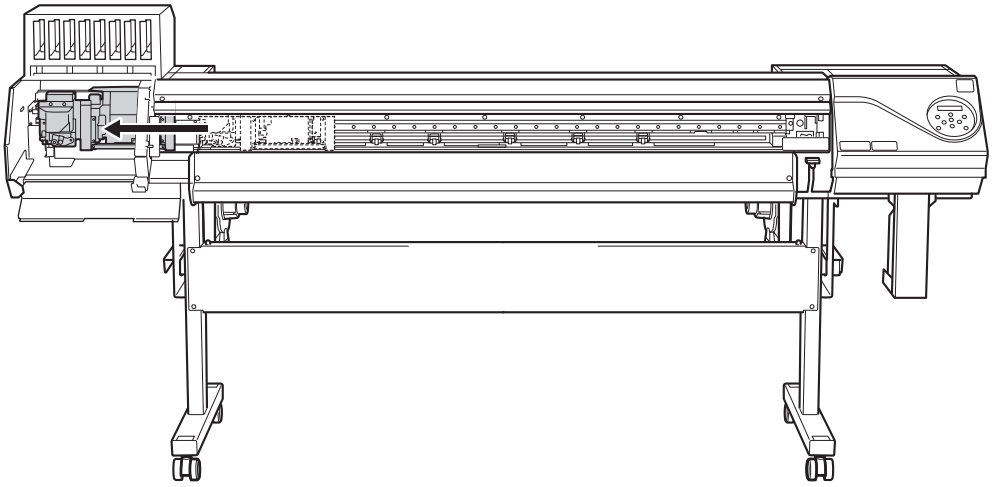

Move the print-head carriage by hand.

⚠ CAUTION

When moving the print-head carriage by hand, be sure to hold the specified position.
Moving it by holding positions other than those specified may deform and damage the cover.

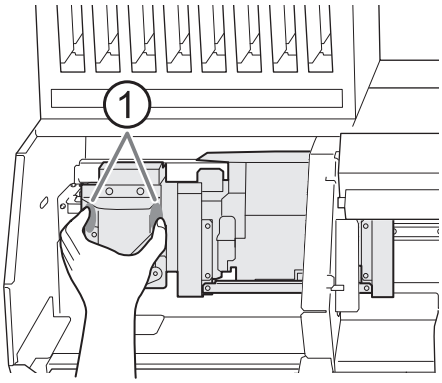

①: Position to hold with your hand

12. **Wet a cloth with anhydrous ethanol or isopropyl alcohol, and then wipe off the base and irradiation unit of each UV lamp with this cloth.**

Wipe the cloth across each UV lamp for approximately 10 round trips until all the dirt is cleared away.

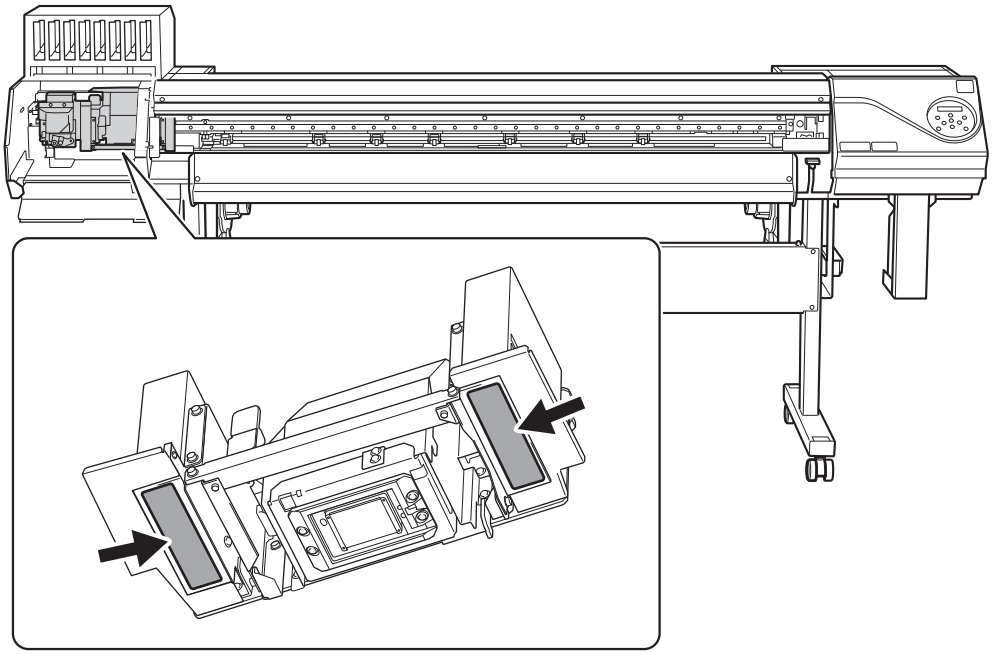

13. **When you have finished cleaning, move the print-head carriage to above the platen.**

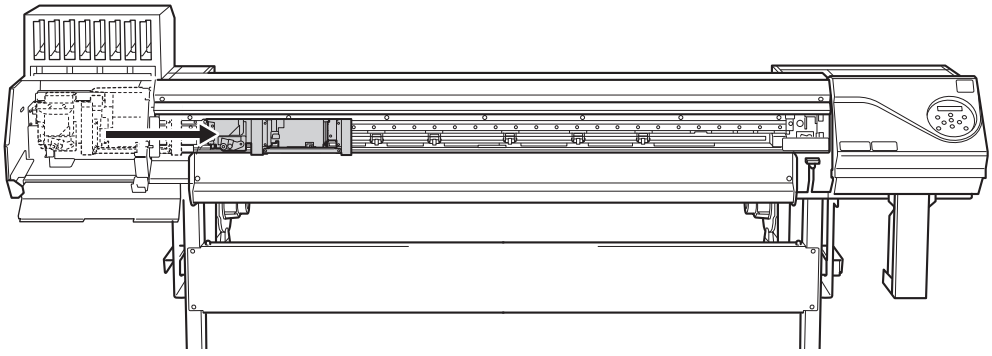

Move the print-head carriage by hand.

⚠ CAUTION

When moving the print-head carriage by hand, be sure to hold the specified position.
Moving it by holding positions other than those specified may deform and damage the cover.

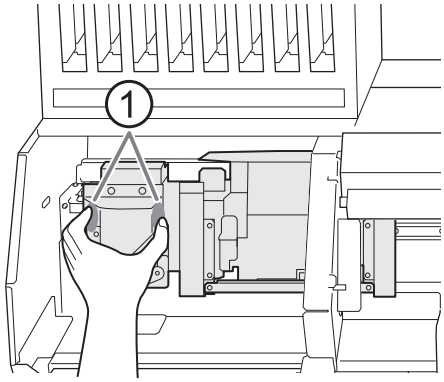

①: Position to hold with your hand

14. **Attach the cut rail.**

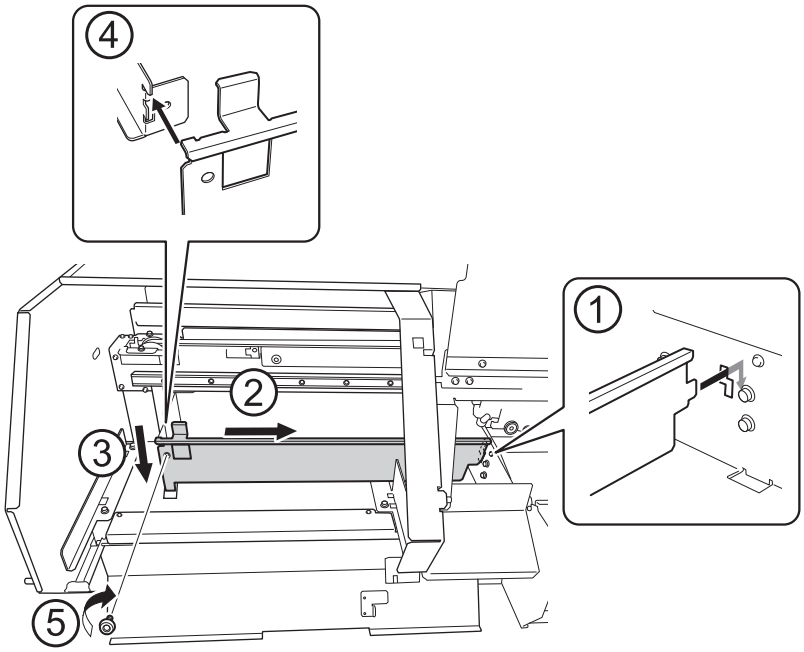

15. **Close the left covers (top and bottom).**

16. **Close the front cover.**

17. **Press [ENTER].**

The screen shown below appears, and then head cleaning starts.

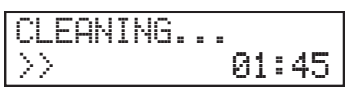

When the following screen is displayed again, UV-LED device cleaning is finished.

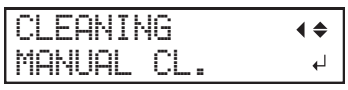

RELATED LINKS

- P. 243When UV-LED Device Cleaning Is Necessary

Disposing of Discharged Fluid

Precautions for Disposing of Discharged Fluid 251
If the Discharged Fluid Disposal Message Appears..... 252

Precautions for Disposing of Discharged Fluid

⚠ WARNING

Never place discharged fluid or ink near an open flame.

Doing so may cause a fire.

⚠ CAUTION

To store discharged fluid temporarily, place it in the included drain bottle or in a durable sealed container such as a metal can or polyethylene tank, and cap the container tightly.

Any spillage or vapor leakage may cause fire, odor, or physical distress.

IMPORTANT

Dispose of discharged fluid properly, in accordance with the laws in effect in your locale.

Discharged fluid is flammable and contains toxic ingredients. Never attempt to incinerate discharged fluid or discard it with ordinary trash. Also, do not dispose of it in sewer systems, rivers, or streams. Doing so may have an adverse impact on the environment.

If the Discharged Fluid Disposal Message Appears

The message shown below appears when a certain amount of discharged fluid has collected in the bottle and the sub power is turned on. If this message appears, dispose of the discharged fluid.

```
EMPTY
   DRAIN BOTTLE↵
```

If you continue to use the drain bottle without discarding the discharged fluid even though the message above has been displayed, the drain bottle will become full, and the message shown below will be displayed. No more discharged fluid can be stored in the drain bottle, so be sure to discard the discharged fluid immediately. If this message appears during printing, printing is stopped.

```
LIMIT OVER EMPTY
DRAIN BOTTLE   ↵
```

IMPORTANT

When the message "LIMIT OVER EMPTY DRAIN BOTTLE" appears on the screen, be sure to discard the discharged fluid. If you do not discard the discharged fluid, you will not be able to clear this message.

Procedure

1. **Remove the drain bottle and discard the discharged fluid.**

IMPORTANT

When you remove the drain bottle, a few drops of discharged fluid may come out of the machine. Exercise caution to prevent this fluid from soiling your hands or the floor.

⚠ WARNING

Never place discharged fluid or ink near an open flame.
Doing so may cause a fire.

⚠ CAUTION

To store discharged fluid temporarily, place it in the included drain bottle or in a durable sealed container such as a metal can or polyethylene tank, and cap the container tightly.
Any spillage or vapor leakage may cause fire, odor, or physical distress.

IMPORTANT

Dispose of discharged fluid properly, in accordance with the laws in effect in your locale.
Discharged fluid is flammable and contains toxic ingredients. Never attempt to incinerate discharged fluid or discard it with ordinary trash. Also, do not dispose of it in sewer systems, rivers, or streams. Doing so may have an adverse impact on the environment.

2. **Quickly attach the emptied drain bottle to the machine once more.**

3. **Press [ENTER].**
   The display returns to the original screen.

Advanced Maintenance

When Normal Cleaning Is Not Effective 255
Medium Cleaning Method 255
Powerful Cleaning Method 257
Manual Cleaning 259
When Manual Cleaning Is Necessary 259
Manual Cleaning Method 260
When Uneven Color Issues Occur with White Ink 272
Ink Circulating Method 272
Light Choke Cleaning Method 273
When Uneven Color Issues Occur with Ink other than White Ink 276
Light Choke Cleaning Method 276
Handling Severe Dot Drop-out, Dot Displacement, and Uneven Colors 279
Ink Renewal Method 279
Partially Restricting the Print Heads Used for Printing 282
Emergency Measure) Cleaning the Print Head Surface 284

When Normal Cleaning Is Not Effective

Medium Cleaning Method

The print heads are important components that discharge ink. They require periodic and appropriate maintenance. When problems such as dot drop-out are not resolved by normal cleaning, perform the more forceful "medium cleaning" to remove clogging from the print heads.

IMPORTANT

Medium cleaning consumes more ink than normal cleaning, and overly frequent use may damage the print heads themselves. Avoid performing this operation more than necessary.

Procedure

1. **Load the media.**

   P. 30Setup of Media

2. **Press [FUNCTION].**

3. **Press [▼], then [▶] to display the screen shown below.**

```
CLEANING        ◀◆
TEST PRINT      ↵▶
```

4. **Press [ENTER].**

   A test pattern is printed.

5. **Press [▼] several times to display the following screen.**

```
CLEANING        ◀◆
MEDIUM CL.      ↵
```

6. **Press [ENTER] to confirm your entry.**

   The screen shown below appears, and then cleaning starts. The (approximate) remaining time for the procedure is displayed on the screen. (The display shown below is an example. "01:45" = "1 minute and 45 seconds")

```
CLEANING...
>>          01:45
```

   When finished, the screen shown below appears again.

```
CLEANING        ◀◆
MEDIUM CL.      ↵
```

7. **Press [▼] several times to display the following screen.**

```
CLEANING        ◀◆
TEST PRINT      ↵▶
```

8. **Press [ENTER].**

   Perform a printing test again to check whether the dot drop-out and dot displacement have been corrected.

MEMO

- If the problem persists, try performing medium cleaning again.
- If problems such as dot drop-out and dot displacement persist even after you have performed medium cleaning several times, perform "powerful cleaning."

RELATED LINKS

- P. 230Printing Tests and Normal Cleaning
- P. 257Powerful Cleaning Method

Powerful Cleaning Method

The print heads are important components that discharge ink. They require periodic and appropriate maintenance. When problems such as dot drop-out are not resolved by medium cleaning, perform the more forceful "powerful cleaning" to remove clogging from the print heads.

IMPORTANT

Powerful cleaning consumes more ink than medium cleaning, and overly frequent use may damage the print heads themselves. Avoid performing this operation more than necessary.

Procedure

1. **Load the media.**

   P. 30Setup of Media

2. **Press [FUNCTION].**

3. **Press [▼], then [▶] to display the screen shown below.**

4. **Press [ENTER].**

   A test pattern is printed.

5. **Press [▼] several times to display the following screen.**

6. **Press [ENTER] to confirm your entry.**

   The screen shown below appears, and then cleaning starts. The (approximate) remaining time for the procedure is displayed on the screen. (The display shown below is an example. "01:45" = "1 minute and 45 seconds")

   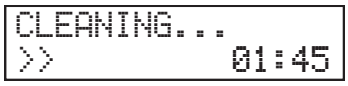

   When finished, the screen shown below appears again.

7. **Press [▼] several times to display the following screen.**

8. **Press [ENTER].**

   Perform a printing test again to check whether the dot drop-out and dot displacement have been corrected.

MEMO

- If the problem persists, try performing powerful cleaning again.
- If problems such as dot drop-out and dot displacement persist even after you have performed powerful cleaning several times, perform "manual cleaning."

RELATED LINKS

- P. 255Medium Cleaning Method
- P. 260Manual Cleaning Method

Manual Cleaning

When Manual Cleaning Is Necessary

The print heads are important components that discharge ink. They require periodic and appropriate maintenance. It is important to perform manual cleaning with the appropriate timing.

After daily operations are finished

Be sure to perform manual cleaning after daily operations are finished.

When symptoms that cannot be improved with powerful cleaning occur

When any of the symptoms given below occur and powerful cleaning is not effective, perform manual cleaning.

Dot drop-out/Dot displacement	Ink drips	Dragging dirt
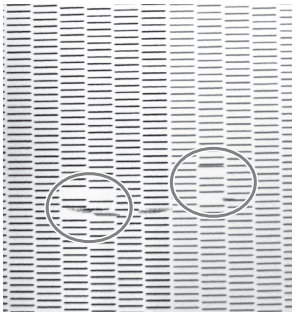	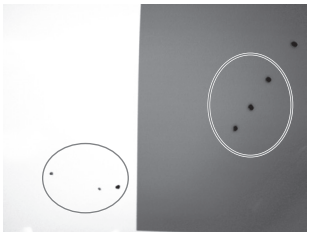	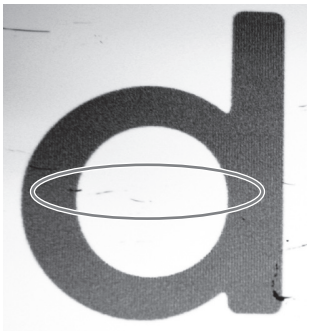
Dust or other foreign matter adheres to the print heads and impedes correct ink discharge.	Ink pools in dust or dirt adhered to the print heads, and drips onto the media.	The phenomenon where dirt or dust accumulates on the print heads.

MEMO

- Wiper replacement may also be effective in improving these symptoms.
- The print heads are components that wear out. Periodic replacement is required, with the frequency of replacement depending on use.

RELATED LINKS

- P. 287Replacing the Wiper

Manual Cleaning Method

Be sure to perform manual cleaning after daily operations are finished. If you want to perform unmanned printing at night, perform manual cleaning before sending the print data.

⚠ CAUTION

Do not perform cleaning immediately after printing has finished. (Wait approximately 15 minutes after printing finishes.)

The area around the UV-LED device is hot and may cause burns.

⚠ WARNING

Be sure to perform operations as specified by the instructions, and never touch any area not specified in the instructions.

Sudden movement of the machine may cause injury.

IMPORTANT

Important notes on this procedure

- Before attempting this operation, remove any media.
- To prevent the print heads from drying out, finish this procedure in 10 minutes or less. A warning beep sounds after 10 minutes.
- Never use any implements other than the included cleaning sticks. Cotton swabs or other lint-producing items may damage the print heads.
- Use only the included cleaning liquid.
- Use one cleaning stick per cleaning session, and then discard the stick after use. Reusing cleaning sticks will adversely affect the printing results.
- Do not put a cleaning stick that has been used for cleaning into the cleaning liquid. Doing so will deteriorate the cleaning liquid.
- Never rub the print head surface (nozzle surface).
- Stroke the sponges very gently, applying as little pressure as possible. Never rub, scrape, or crush them.
- If you use up the cleaning sticks or cleaning liquid, contact your authorized Roland DG Corporation dealer or visit our website (https://www.rolanddg.co.jp/).

If a warning beep sounds during cleaning

- A warning beep sounds 10 minutes after operation starts. Stop work, close all the covers, and then press [ENTER] to end the manual cleaning mode. After that, restart the procedure from the beginning.

Required items	
Cleaning sticks	Cleaning liquid

1. Clean the print heads.

Procedure

1. **Remove any media.**
2. **Remove the media clamps.**
3. **Press [FUNCTION].**
4. **Press [▶].**
5. **Press [▼] several times to display the following screen.**

6. **Press [ENTER].**

   When the media clamp removal message is displayed, press [ENTER] again. After "NOW PROCESSING.." is displayed, the screen shown below appears.

   Also, the print head moves to the left end of the platen.

IMPORTANT

Do not press [ENTER] at this stage. Press [ENTER] after cleaning is complete. If you press [ENTER] at this stage, wait for the screen to change as shown in the following figure, and then press [ENTER] again.

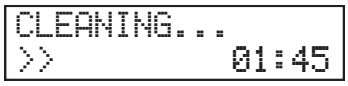

7. **Open the front cover.**
8. **Open the left covers (top and bottom).**

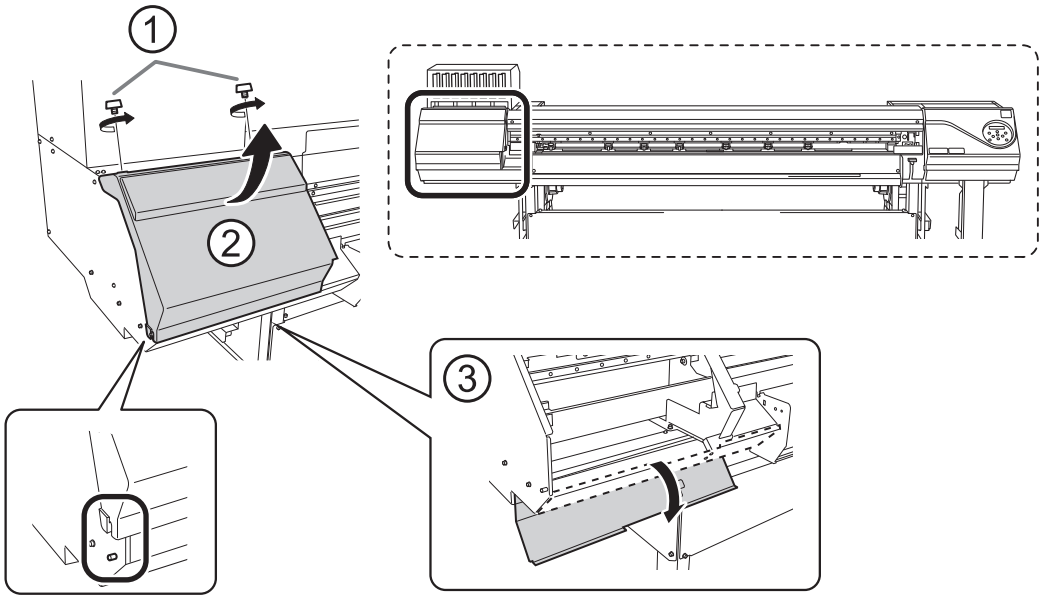

9. Touch the location shown in the figure to discharge any static electricity.

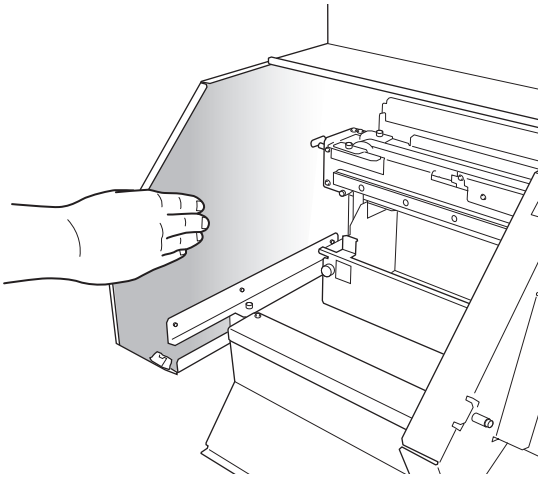

10. Remove the cut rail.

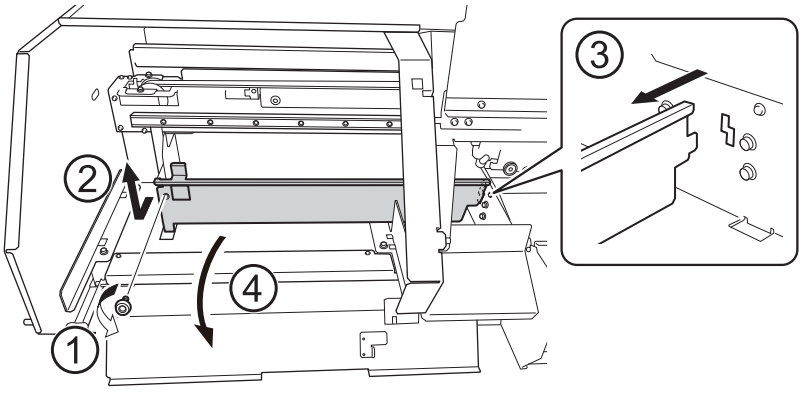

11. Move the print-head carriage to the left end.

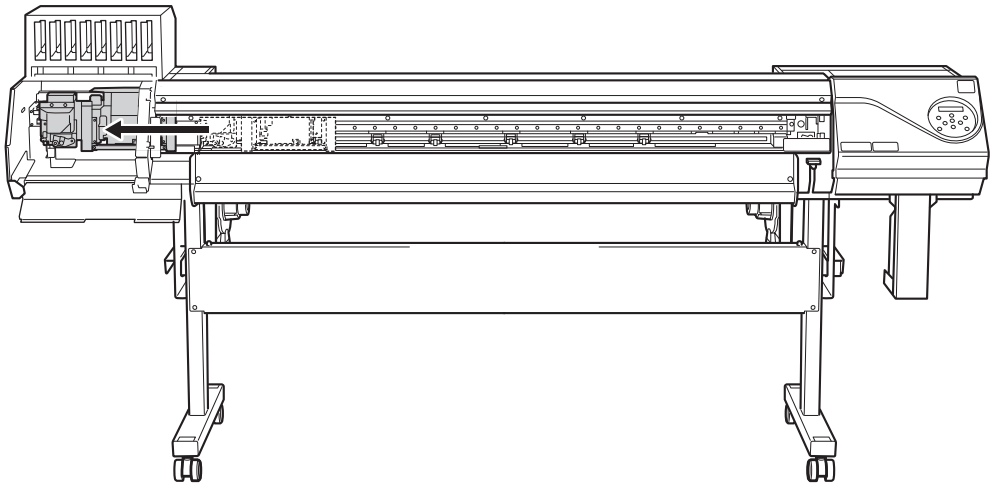

Move the print-head carriage by hand.

⚠ CAUTION

When moving the print-head carriage by hand, be sure to hold the specified position.
Moving it by holding positions other than those specified may deform and damage the cover.

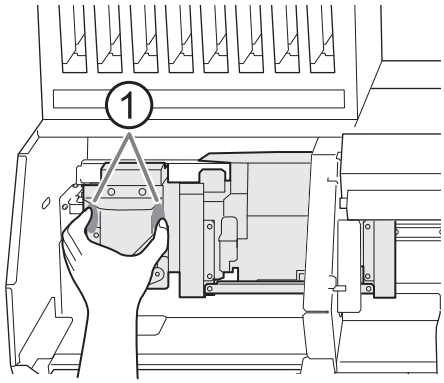

①: Position to hold with your hand

12. Apply a large amount of cleaning liquid to the cleaning stick.

IMPORTANT

Be sure to use one of the included cleaning sticks.

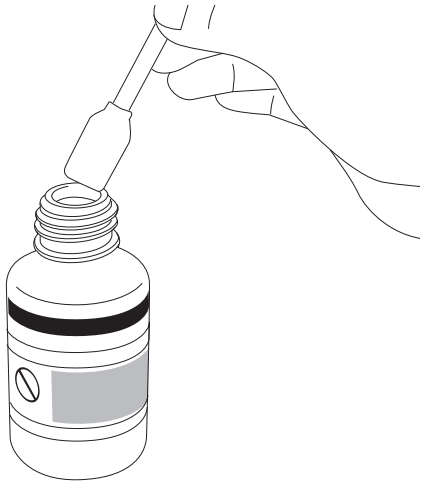

13. **Clean the locations shown in the following figure.**

Be especially careful to clean away any fibrous dust (lint).

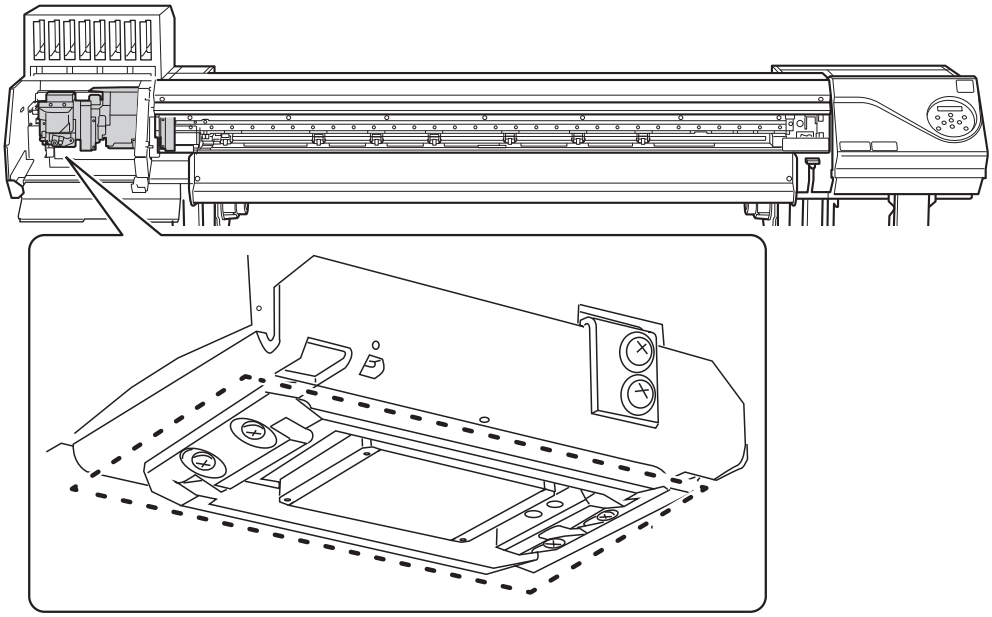

(1) **Use the wide surface of the cleaning stick to wipe off the left side. Then, use the opposite surface (which is not dirty) to wipe off the right side.**

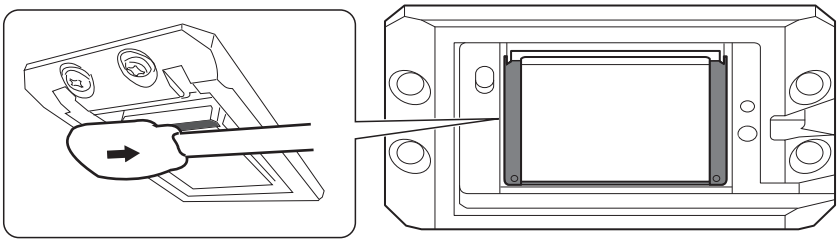

(2) **Stand the cleaning stick upright and wipe off the left side. Then, use the opposite surface to wipe off the right side.**

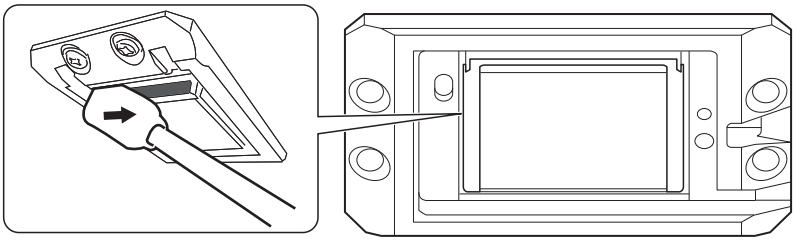

(3) **Use the wide surface of the cleaning stick to wipe away any dirt from the area shown in the figure.**

If this area has any ink or cleaning liquid that appears likely to drip, use a dry cloth that is not fluffy to gently wipe away the ink or cleaning liquid.

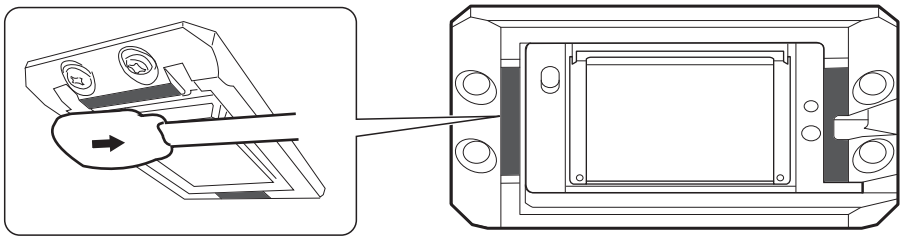

14. **When you have finished cleaning, move the print-head carriage to above the platen.**

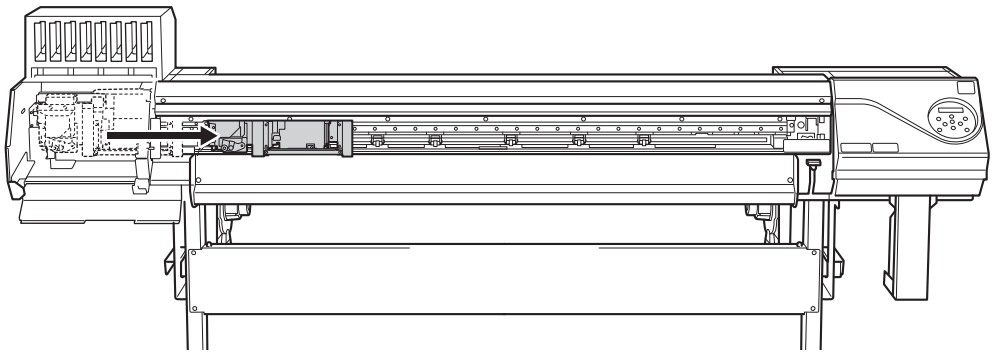

Move the print-head carriage by hand.

⚠ CAUTION

When moving the print-head carriage by hand, be sure to hold the specified position.

Moving it by holding positions other than those specified may deform and damage the cover.

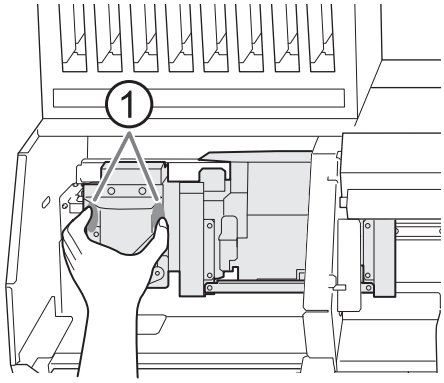

①: Position to hold with your hand

15. **Attach the cut rail.**

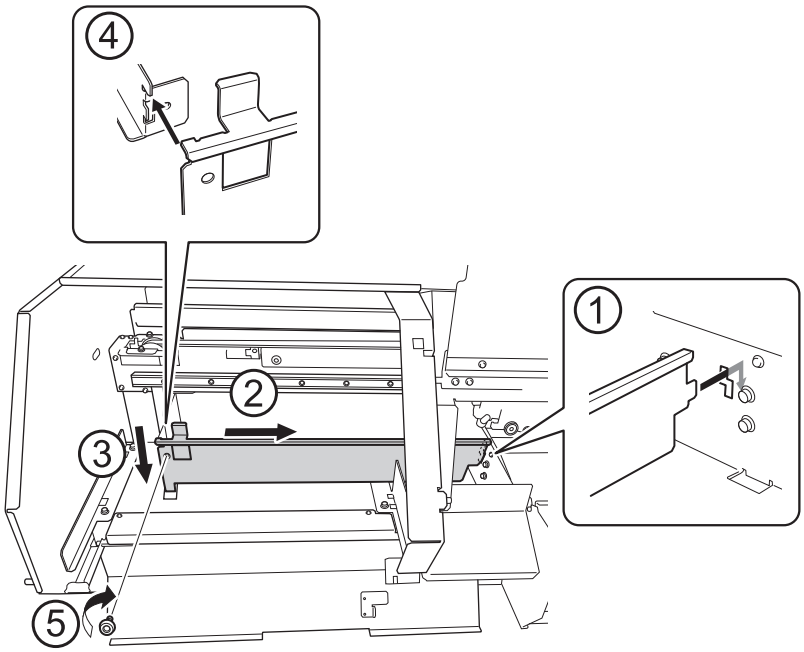

16. Close the left covers (top and bottom).

2. Clean the print head caps.

Procedure

1. **Open the right cover.**

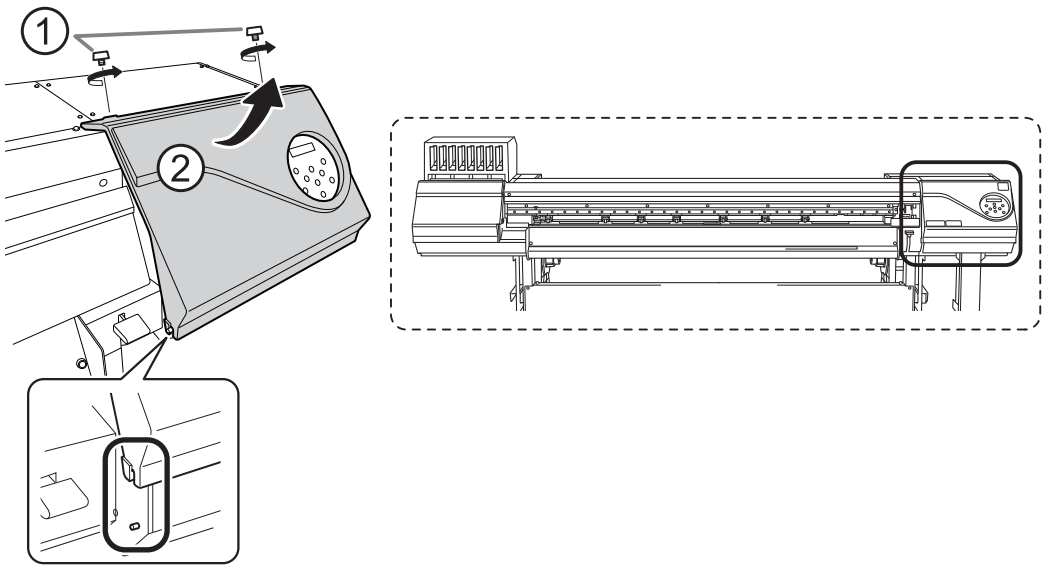

2. **Clean the locations shown in the following figure.**

Be especially careful to clean away any fibrous dust (lint).

(1) **After wiping off the hooked side of the wiper (a) with a cleaning stick, wipe off the opposite side (b).**

(2) **Wipe off the area in the figure with a cleaning stick.**

(3) **Use the wide surface of the cleaning stick, and then shift it to a different location, pressing the cleaning stick against the location to absorb the dirt there.**

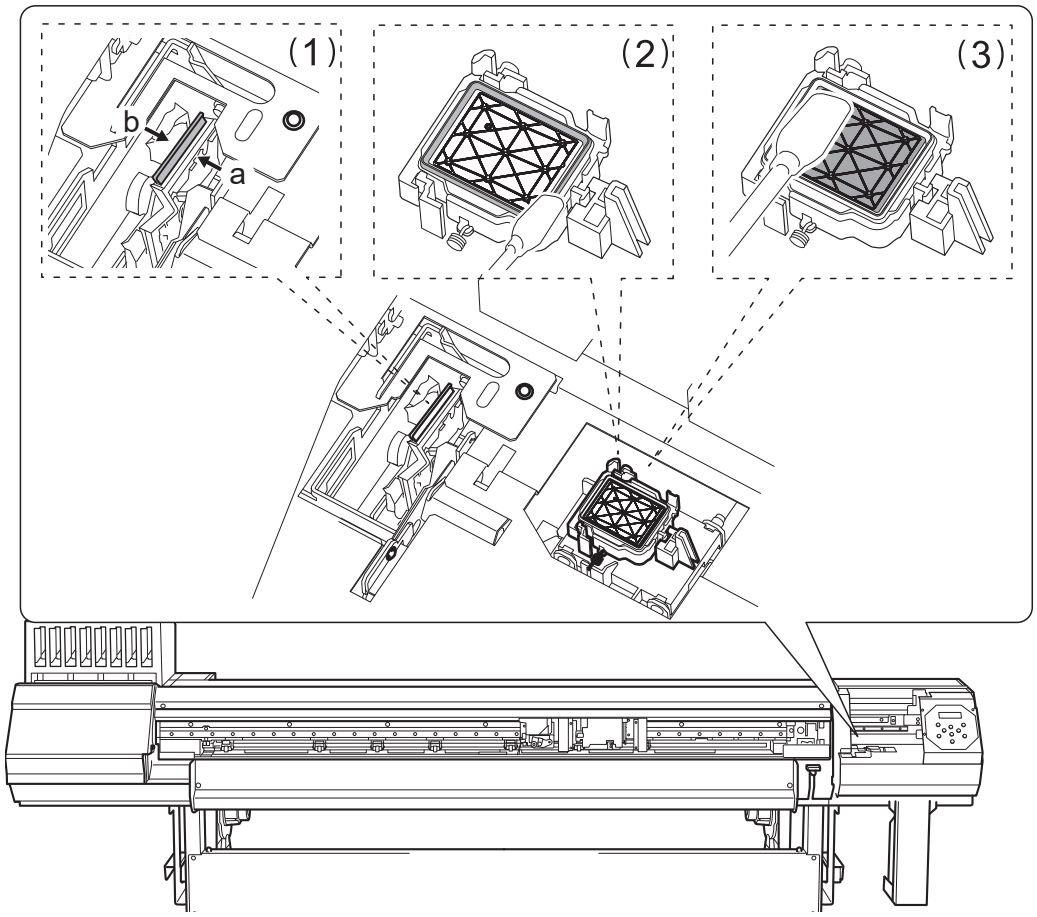

3. **Remove any hardened ink on top of the print head caps.**

Use a pair of tweezers to remove the pieces of hardened ink that are 3 mm (0.12 in.) or more in length.

IMPORTANT

Do not use excessive force when pulling on pieces of hardened ink that are difficult to remove. Doing so may damage the print head caps.

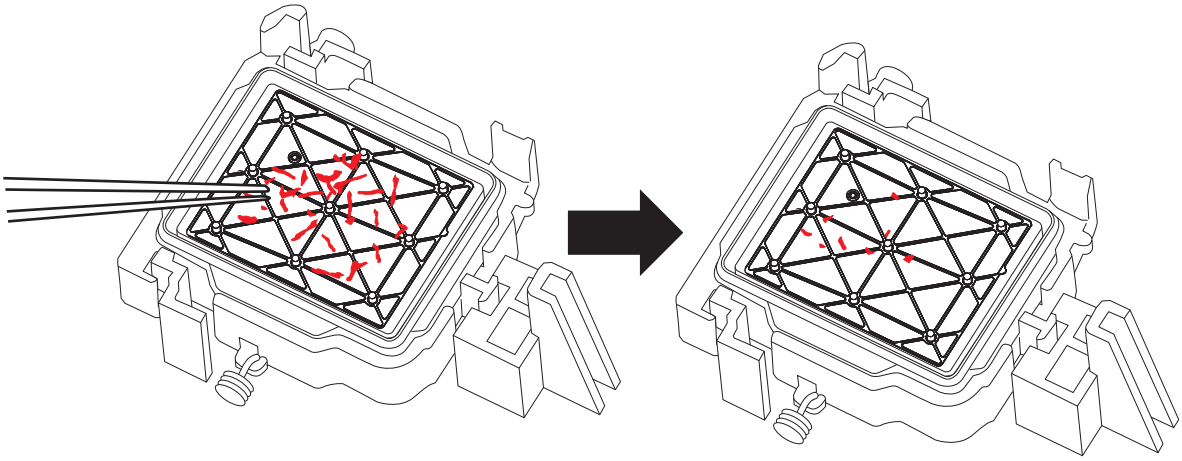

4. **Close the right cover.**

5. **Close the front cover.**

6. **Press [ENTER].**

The screen shown below appears, and then cleaning starts. The (approximate) remaining time for the procedure is displayed on the screen. (The display shown below is an example. "01:45" = "1 minute and 45 seconds")

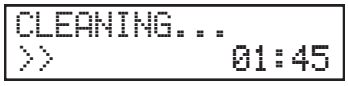

When cleaning finishes, the screen shown below appears again.

7. **Press [FUNCTION] to return to the original screen.**

3. Perform a printing test to check the results.

Procedure

1. **Load the media.**
   P. 30Setup of Media

2. **Press [FUNCTION].**

3. **Press [▼], then [▶] to display the screen shown below.**

4. **Press [ENTER].**
   Printing of the test pattern starts.

5. **Check whether there is dot drop-out or dot displacement in the test pattern.**
   Missing blocks indicate dot drop-out. Collapsed or inclined blocks indicate dot displacement.

   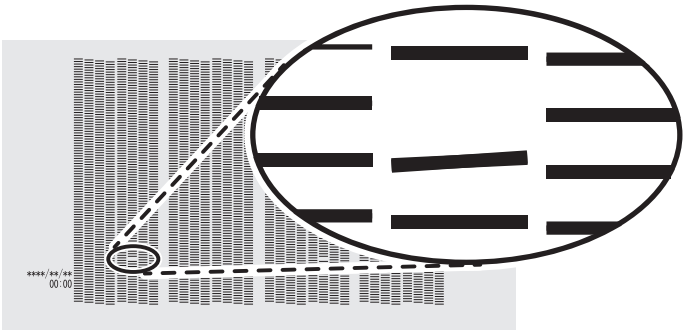

6. **If you have opened the front cover, close it.**
   If no dot drop-out or dot displacement occurs, this operation is finished. Press [FUNCTION] to go back to the original screen.

If dot drop-out or dot displacement is present, perform cleaning such as normal cleaning.

RELATED LINKS

- P. 230Printing Tests and Normal Cleaning
- P. 255Medium Cleaning Method
- P. 257Powerful Cleaning Method

4. Consumable Products and Parts Related to Manual Cleaning

The cleaning sticks, cleaning liquid, and print heads are consumable products or consumable parts.

- If you use up the cleaning sticks and cleaning liquid used for manual cleaning, contact your authorized Roland DG Corporation dealer or visit our website (https://www.rolanddg.co.jp/).
- The print heads are components that wear out. Periodic replacement is required, with the frequency of replacement depending on use. Contact your authorized Roland DG Corporation dealer.

When Uneven Color Issues Occur with White Ink

Ink Circulating Method

If uneven color issues with white ink are not resolved even after shaking the ink cartridges to mix the ink, perform "ink circulation." Uneven colors refers to the symptom of printed colors being uneven (such as the color density being inconsistent) even when the same data is printed with the same settings.

Procedure

1. **Press [MENU].**

2. **Press [▼] several times to display the following screen.**

3. **Press [▶] once, and then press [▼] several times to display the screen shown below.**

4. **Press [▶] once, and then press [▼] several times to display the screen shown below.**

5. **Press [ENTER].**

   The screen shown below appears, and then the ink circulation starts. The (approximate) remaining time for the procedure is displayed on the screen. (The display shown below is an example. "01:45" = "1 minute and 45 seconds")

   Depending on the timing with which the ink circulation is started, the following screen may be displayed and cleaning may start. When cleaning is complete, the ink circulation will start, so wait for the ink circulation to complete. (The display shown below is an example. "01:45" = "1 minute and 45 seconds")

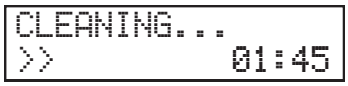

   When finished, the screen shown below appears again.

Light Choke Cleaning Method

If problems still remain even after circulating the ink, perform "light choke cleaning."
Light choke cleaning can be used to stabilize the output colors by agitating the ink.

IMPORTANT

Light choke cleaning consumes a lot of ink, and overly frequent use may damage the print heads themselves. Avoid performing this operation more than necessary.

Procedure

1. **Press [MENU].**

2. **Press [▼] several times to display the following screen.**

3. **Press [▶] once, and then press [▼] several times to display the screen shown below.**

4. **Press [▶] once, and then press [▼] several times to display the screen shown below.**

5. **Press [ENTER].**

   The screen shown below appears, and then cleaning starts. The (approximate) remaining time for the procedure is displayed on the screen. (The display shown below is an example. "01:45" = "1 minute and 45 seconds")

MEMO

When "EMPTY DRAIN BOTTLE" is displayed during cleaning

1. Remove the drain bottle and discard the discharged fluid.
2. Quickly attach the emptied drain bottle to the machine once more.
3 Press [ENTER].

IMPORTANT

When you remove the drain bottle, a few drops of discharged fluid may come out of the machine. Exercise caution to prevent this fluid from soiling your hands or the floor.

⚠ WARNING

Never place discharged fluid or ink near an open flame.

Doing so may cause a fire.

⚠ CAUTION

Before you detach the drain bottle, be sure to wait for the screen to display "EMPTY DRAIN BOTTLE". After discarding the discharged fluid, promptly attach the drain bottle to the machine.

Failing to follow this procedure may cause discharged fluid to flow out of the tube and spill, soiling your hands or the floor.

⚠ CAUTION

To store discharged fluid temporarily, place it in the included drain bottle or in a durable sealed container such as a metal can or polyethylene tank, and cap the container tightly.

Any spillage or vapor leakage may cause fire, odor, or physical distress.

IMPORTANT

Dispose of discharged fluid properly, in accordance with the laws in effect in your locale.

Discharged fluid is flammable and contains toxic ingredients. Never attempt to incinerate discharged fluid or discard it with ordinary trash. Also, do not dispose of it in sewer systems, rivers, or streams. Doing so may have an adverse impact on the environment.

When cleaning finishes, the screen shown below appears again.

6. Press [MENU] to return to the original screen.

If uneven color issues are not resolved by "light choke cleaning," perform "ink renewal."

RELATED LINKS

- P. 279Ink Renewal Method

When Uneven Color Issues Occur with Ink other than White Ink

Light Choke Cleaning Method

Perform this cleaning when printed colors are unstable or uneven, e.g., when color density is inconsistent, even if the same data is printed with the same settings. This will stabilize the output colors by agitating the ink.

IMPORTANT

Light choke cleaning consumes a lot of ink, and overly frequent use may damage the print heads themselves. Avoid performing this operation more than necessary.

Procedure

1. **Press [MENU].**

2. **Press [▼] several times to display the following screen.**

3. **Press [▶] once, and then press [▼] several times to display the screen shown below.**

4. **Press [▶] once, and then press [▼] several times to display the screen shown below.**

5. **Press [ENTER].**

   The screen shown below appears, and then cleaning starts. The (approximate) remaining time for the procedure is displayed on the screen. (The display shown below is an example. "01:45" = "1 minute and 45 seconds")

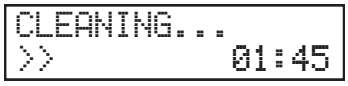

MEMO

When "EMPTY DRAIN BOTTLE" is displayed during cleaning

1. Remove the drain bottle and discard the discharged fluid.
2. Quickly attach the emptied drain bottle to the machine once more.
3 Press [ENTER].

IMPORTANT

When you remove the drain bottle, a few drops of discharged fluid may come out of the machine. Exercise caution to prevent this fluid from soiling your hands or the floor.

⚠ WARNING

Never place discharged fluid or ink near an open flame.

Doing so may cause a fire.

⚠ CAUTION

Before you detach the drain bottle, be sure to wait for the screen to display "EMPTY DRAIN BOTTLE". After discarding the discharged fluid, promptly attach the drain bottle to the machine.

Failing to follow this procedure may cause discharged fluid to flow out of the tube and spill, soiling your hands or the floor.

⚠ CAUTION

To store discharged fluid temporarily, place it in the included drain bottle or in a durable sealed container such as a metal can or polyethylene tank, and cap the container tightly.

Any spillage or vapor leakage may cause fire, odor, or physical distress.

IMPORTANT

Dispose of discharged fluid properly, in accordance with the laws in effect in your locale.

Discharged fluid is flammable and contains toxic ingredients. Never attempt to incinerate discharged fluid or discard it with ordinary trash. Also, do not dispose of it in sewer systems, rivers, or streams. Doing so may have an adverse impact on the environment.

When cleaning finishes, the screen shown below appears again.

6. **Press [MENU] to return to the original screen.**

If uneven color issues are not resolved by "light choke cleaning," perform "ink renewal."

RELATED LINKS

- P. 279Ink Renewal Method

Handling Severe Dot Drop-out, Dot Displacement, and Uneven Colors

Ink Renewal Method

Perform the procedure below if ink discharge issues such as dot drop-out are not corrected after performing cleaning using the cleaning function (normal, medium, powerful) or manual cleaning.

IMPORTANT

A large amount of ink will be discharged during this operation. Perform this operation only when ink discharge issues such as dot drop-out, dot displacement, and uneven colors cannot be corrected even after performing cleaning using the other cleaning functions (normal, medium, powerful, and manual).

Procedure

1. **Press [MENU].**

2. **Press [▼] several times to display the following screen.**

3. **Press [▶] once, and then press [▼] several times to display the screen shown below.**

4. **Press [▶] once, and then press [▼] several times to display the screen shown below.**

5. **Press [ENTER].**

   The screen shown below appears, and then ink renewal starts. The (approximate) remaining time for the procedure is displayed on the screen. (The display shown below is an example. "01:45" = "1 minute and 45 seconds")

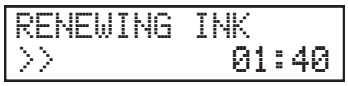

MEMO

If **"EMPTY DRAIN BOTTLE"** appears

1. Remove the drain bottle and discard the discharged fluid.
2. Quickly attach the emptied drain bottle to the machine once more.
3 Press [ENTER].

IMPORTANT

When you remove the drain bottle, a few drops of discharged fluid may come out of the machine. Exercise caution to prevent this fluid from soiling your hands or the floor.

⚠ WARNING

Never place discharged fluid or ink near an open flame.

Doing so may cause a fire.

⚠ CAUTION

Before you detach the drain bottle, be sure to wait for the screen to display "EMPTY DRAIN BOTTLE". After discarding the discharged fluid, promptly attach the drain bottle to the machine.

Failing to follow this procedure may cause discharged fluid to flow out of the tube and spill, soiling your hands or the floor.

⚠ CAUTION

To store discharged fluid temporarily, place it in the included drain bottle or in a durable sealed container such as a metal can or polyethylene tank, and cap the container tightly.

Any spillage or vapor leakage may cause fire, odor, or physical distress.

IMPORTANT

Dispose of discharged fluid properly, in accordance with the laws in effect in your locale.

Discharged fluid is flammable and contains toxic ingredients. Never attempt to incinerate discharged fluid or discard it with ordinary trash. Also, do not dispose of it in sewer systems, rivers, or streams. Doing so may have an adverse impact on the environment.

When cleaning finishes, the screen shown below appears again.

6. **Press [MENU] to return to the original screen.**

RELATED LINKS

- P. 230Printing Tests and Normal Cleaning
- P. 255Medium Cleaning Method
- P. 257Powerful Cleaning Method
- P. 259Manual Cleaning

Partially Restricting the Print Heads Used for Printing

When dot drop-out or dot displacement is not improved even after renewing the ink, partially restrict the print heads to use for printing (i.e. prevent the use of the print heads that are causing discharge issues). This operation is called the "nozzle mask," and while it slows down printing speed, it also allows you to decrease the impact of dot drop-out or dot displacement.

First print a test pattern, and then select the nozzle group to use by viewing the test results. After that, use VersaWorks to select the nozzle group used for printing.

1. Perform a printing test for the nozzle mask.

Procedure

1. **Load the media.**

   P. 30Setup of Media

2. **Press [FUNCTION].**

3. **Press [▼] once, and then press [▶] twice to display the screen shown below.**

4. **Press [ENTER].**

   Printing of the test pattern starts.

5. **Check for the nozzle group with dot drop-out or dot displacement by viewing the results of the printing test.**

   "1" or "2" is the nozzle group. The following shows a dot drop-out in nozzle group 2.

   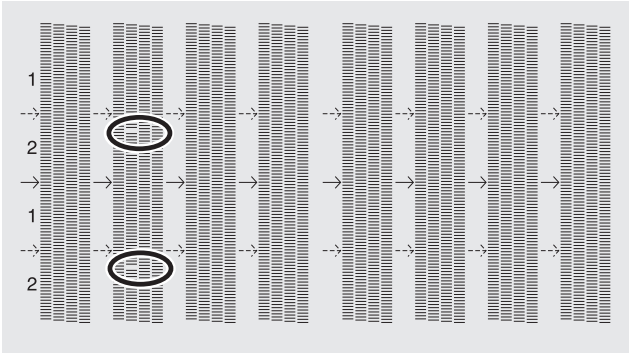

MEMO

If the printing-test results are difficult to interpret

Check the results in a bright location, changing your line of vision. They are visible using the reflection of the light.

2. Limit the print heads used for printing.

Procedure

1. **Start VersaWorks.**
2. **Click [Printer]>[Printer Settings].**
   The [**Printer Settings**] dialog box appears.
3. **From the [Printer List], select the printer whose print heads will be limited.**
4. **Click [Advanced].**
   The [**Advanced**] dialog box appears.
5. **Select the nozzle group to use in printing from the printing-test results.**
   The nozzle group numbers that can be selected vary depending on the model being used and the firmware version. Select the appropriate group number (or all the group numbers) to match the results of the printing test.

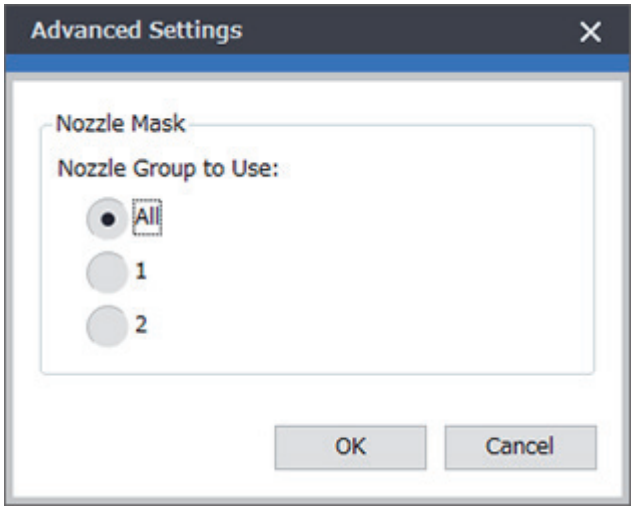

6. **Click [OK].**
   Close the [**Advanced**] dialog box.
7. **Click [OK].**
   Close the [**Printer Settings**] dialog box.

   The icon is displayed on top of the image of the printer whose setting has been changed.

RELATED LINKS

- VersaWorks manual (https://webmanual.rolanddg.com/VersaWorks6)

Emergency Measure) Cleaning the Print Head Surface

When dot drop-out or dot deflection is not improved even if cleaning is performed several times, you can clean the surface of the print heads as an emergency measure. The print head surface (nozzle surface) is a very delicate mechanism, so work must be performed carefully and cautiously.

This operation is an emergency measure. It may damage defect-free parts depending on the symptoms, worsening the symptoms. If you have any questions, contact your authorized Roland DG Corporation dealer.

Procedure

1. **Apply a large amount of cleaning liquid to the cleaning stick.**

   IMPORTANT

   Be sure to use one of the included cleaning sticks.

   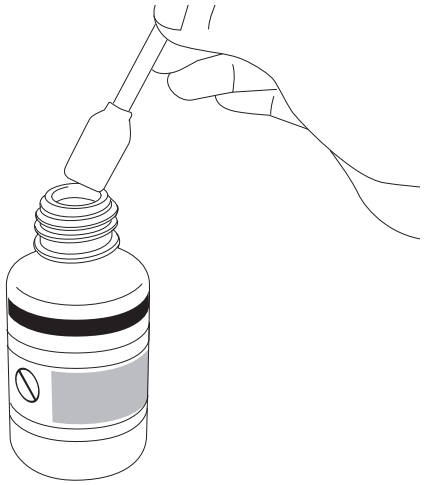

2. **Very gently touch the cleaning stick against the print head surface (nozzle surface).**

   Very softly press the cleaning stick against the print head so that cleaning liquid soaks into the print head surface (nozzle surface). Never rub the stick on the surface or press it forcibly.

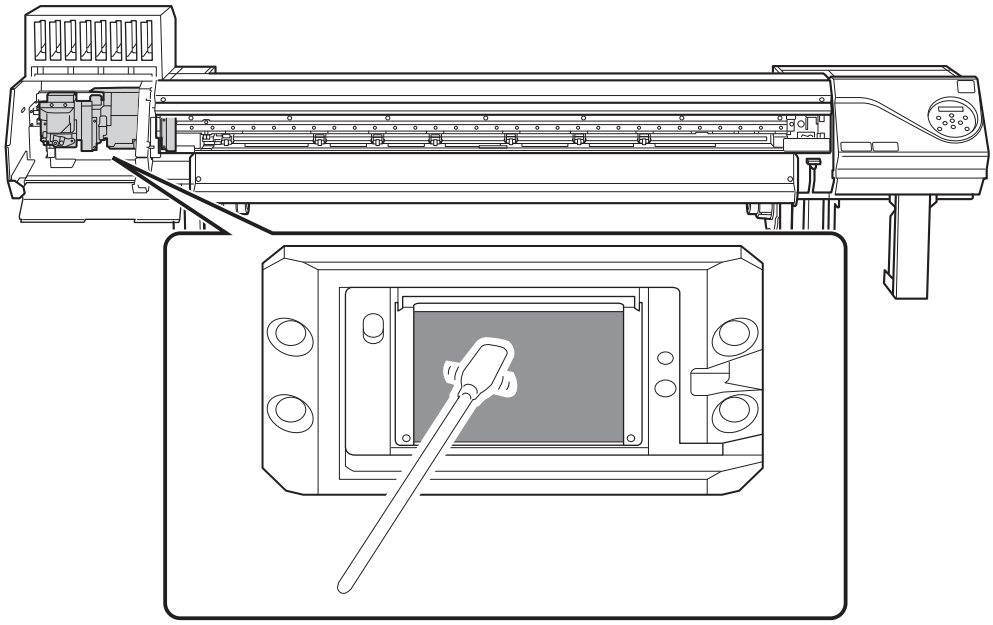

Replacing Consumable Parts

Replacing Parts for Maintenance 287
Replacing the Wiper 287
Replacing the Felt Wiper 291
Replacing the Blade/Separating Knife 294
Replacing the Blade 294
Replacing the Separating Knife 301
Inquiries for Consumable Parts and Products 304
Items That You Can Purchase and Replace by Yourself 304
Items That Require Inquiries before Replacement 304

Replacing Parts for Maintenance

Replacing the Wiper

The wiper is a component that is used for cleaning the print heads.

When the following screen is displayed, it is time to replace the wiper.

```
TIME FOR
  WIPER REPLACE↵
```

For information about purchasing wipers, contact your authorized Roland DG Corporation dealer or visit our website (https://www.rolanddg.co.jp/).

⚠ CAUTION

Be sure to perform operations as specified by the instructions, and never touch any area not specified in the instructions.

Otherwise sudden movement of the machine may cause injury.

Required items			
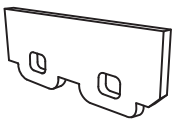	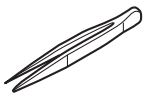		
Wiper	Tweezers	Cleaning sticks	Cleaning liquid

Procedure

1. **Press [ENTER] when the following screen appears.**

   ```
   TIME FOR
     WIPER REPLACE↵
   ```

2. **Remove any media.**

3. **Remove the media clamps.**

4. **Press [MENU].**

5. **Press [▼] several times to display the following screen.**

   ```
   MENU                ◆
   SUB MENU            ▶
   ```

6. **Press [▶] once, and then press [▼] several times to display the screen shown below.**

   ```
   SUB MENU            ◆
   MAINTENANCE         ▶
   ```

7. **Press [▶] to display the following screen.**

   ```
   MAINTENANCE         ◆
   REPLACE WIPER       ↵
   ```

8. **Press [ENTER].**

The print-head carriage moves to a location where wiper replacement is possible, and then the screen shown below appears.

```
OPEN COVER R
```

9. **Open the right cover.**

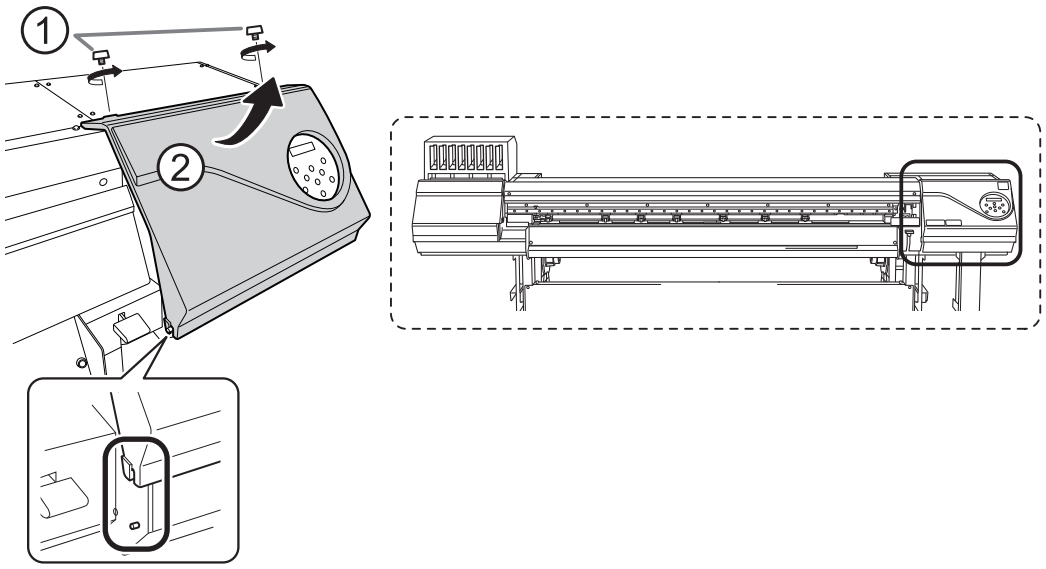

Preparation is complete once the following screen is displayed.

```
REPLACE WIPER
      FINISHED?↵
```

IMPORTANT

Do not press [ENTER] at this stage. Press [ENTER] after replacing the wiper. If you press [ENTER] at this stage, press [ENTER] again after the message "CLEAN WIPER FINISHED?" appears. Then, close the right cover according to the instructions on the screen, wait for the following screen to be displayed, and then press [ENTER] again.

```
MAINTENANCE    ◆▲
REPLACE WIPER   ↵
```

10. **Touch the location shown in the figure to discharge any static electricity.**

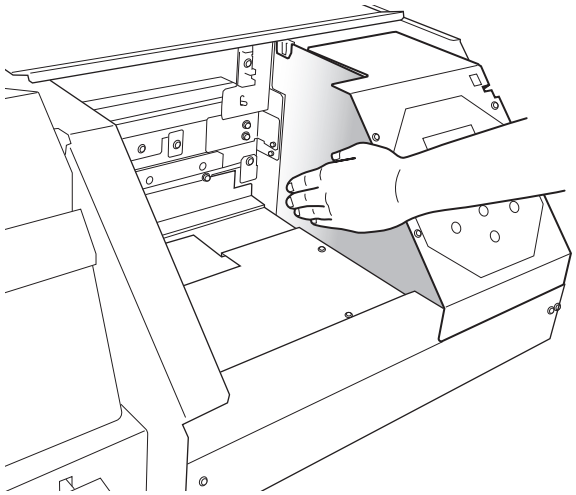

11. **Replace the wiper.**

(1) **Detach the old wiper.**

Using the tweezers, unhook the wipers, and then pull them up. Using the tweezers to press on the hook in the hole on the wiper makes it easier to remove the wiper.

(2) **Attach the new wiper.**

Place the inclined end of the wiper on the back side of the machine. If the wiper is installed with the incorrect orientation, appropriate cleaning will not be possible.

Be sure to attach the wiper to the hook. Failure to do so may result in dot drop-out or other problems.

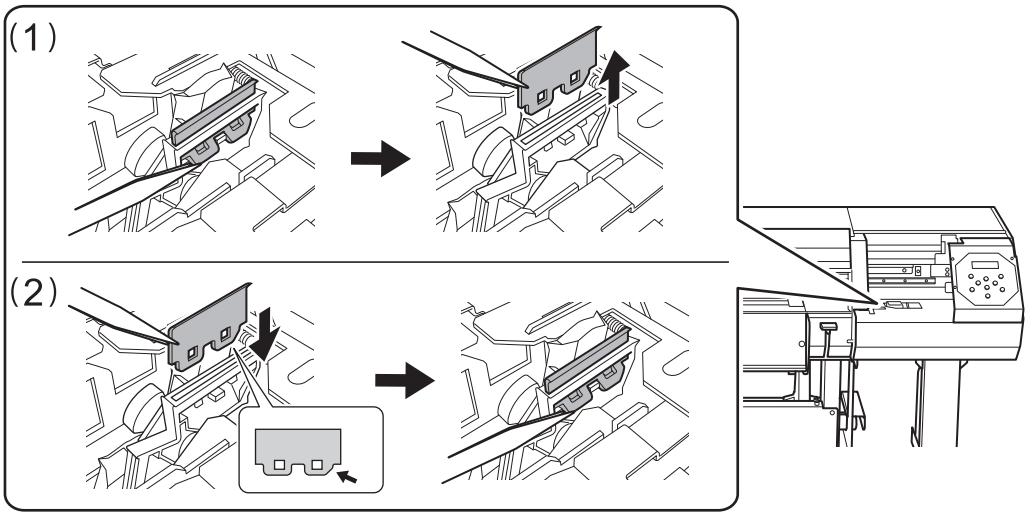

12. **Press [ENTER].**

The screen shown below appears.

```
CLEAN WIPER
      FINISHED?↵
```

13. **Apply a large amount of cleaning liquid to the cleaning stick.**

IMPORTANT

Be sure to use one of the included cleaning sticks.

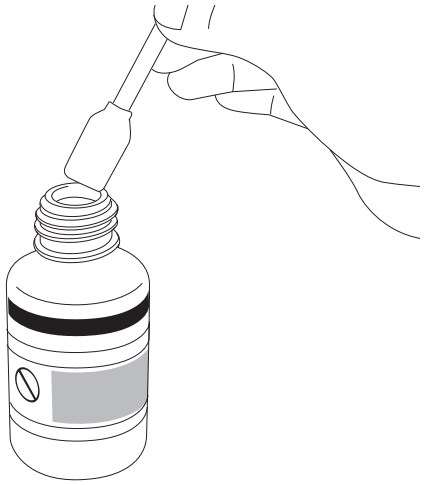

14. **Clean the locations shown in the following figure.**

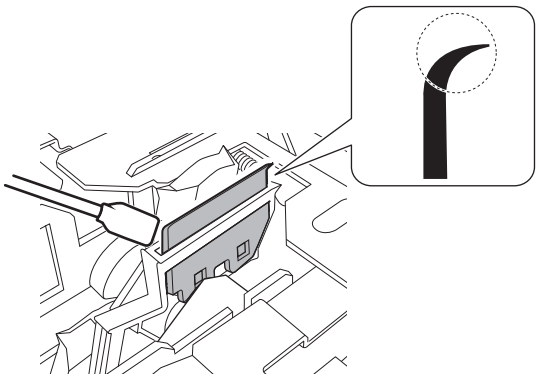

15. **Press [ENTER].**

16. **When the following screen is displayed, close the right cover.**

When the following screen is displayed again, the wiper replacement is finished.

17. **Press [MENU] to return to the original screen.**

Replacing the Felt Wiper

The felt wiper is a component that is used for cleaning the print heads.

When the following screen is displayed, it is time to replace the wiper.

For information about purchasing felt wipers, contact your authorized Roland DG Corporation dealer or visit our website (https://www.rolanddg.co.jp/).

⚠ CAUTION

Be sure to perform operations as specified by the instructions, and never touch any area not specified in the instructions.

Otherwise sudden movement of the machine may cause injury.

Required items	
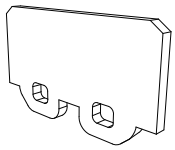	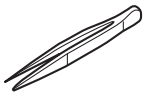
Felt wiper	Tweezers

Procedure

1. **Press [ENTER] when the following screen appears.**

2. **Remove any media.**

3. **Remove the media clamps.**

4. **Press [MENU].**

5. **Press [▼] several times to display the following screen.**

6. **Press [▶] once, and then press [▼] several times to display the screen shown below.**

7. **Press [▶] once, and then press [▼] once to display the screen shown below.**

8. **Press [ENTER].**

The print-head carriage moves to a location where felt wiper replacement is possible, and then the screen shown below appears.

```
OPEN COVER R
```

9. **Open the right cover.**

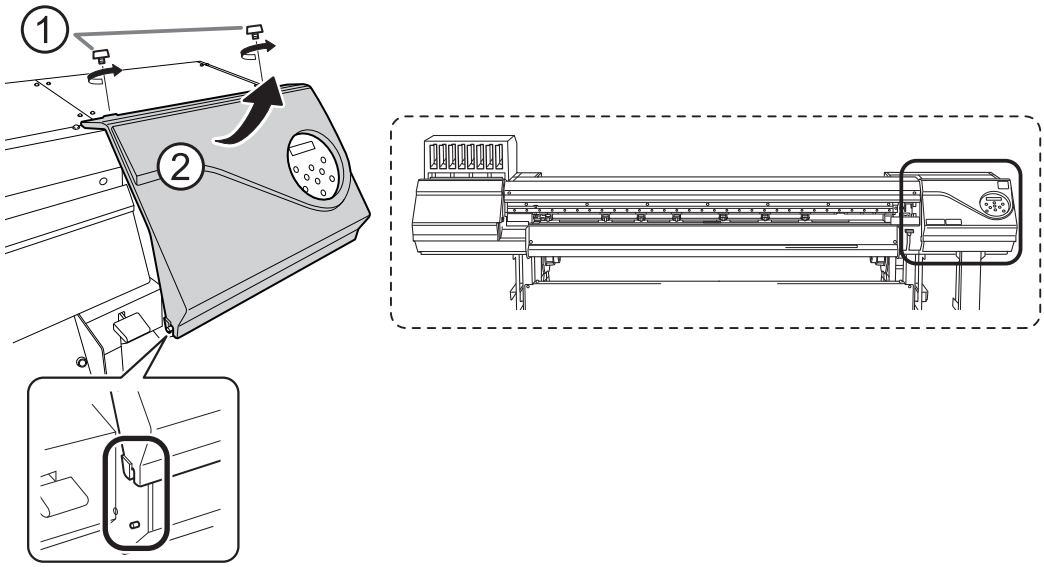

Preparation is complete once the following screen is displayed.

```
FINISHED?
                    ↵
```

IMPORTANT

Do not press [ENTER] at this stage. Press [ENTER] after replacing the felt wiper. If you press [ENTER] at this stage, close the right cover according to the instructions on the screen, wait for the following screen to be displayed, and then press [ENTER] again.

```
MAINTENANCE      ◆▲
REPLACE FELT     ↵
```

10. **Touch the location shown in the figure to discharge any static electricity.**

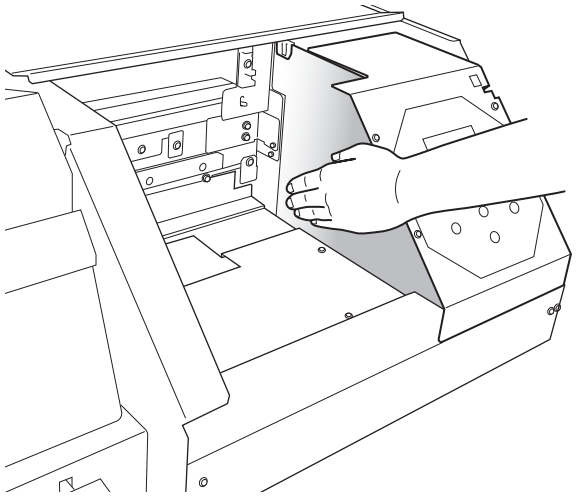

11. **Open the front cover.**

This makes it easier to check the mounting status of the felt wiper.

12. **Replace the felt wiper.**

(1) **Detach the old felt wiper.**

Using the tweezers, unhook the wipers, and then pull them up. Catching the tweezers on the hole in the felt wiper makes it easier to remove the felt wiper.

(2) **Attach a new felt wiper.**

Be sure to attach the felt wiper to the hook. Failure to do so may result in dot drop-out or other problems.

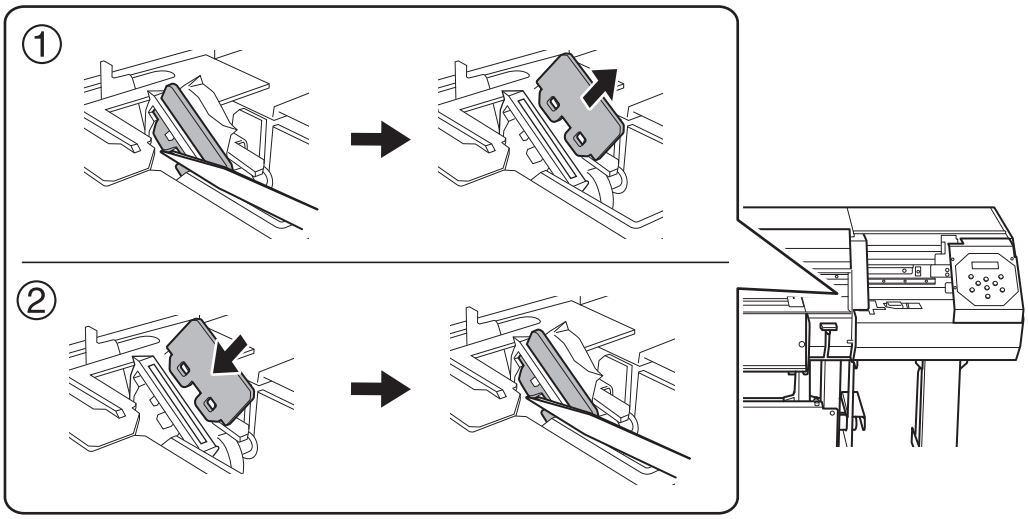

13. **Close the front cover.**

14. **Press [ENTER].**

15. **When the following screen is displayed, close the right cover.**

When the following screen is displayed again, the felt wiper replacement is finished.

16. **Press [MENU] to return to the original screen.**

Replacing the Blade/Separating Knife

Replacing the Blade

If the blade becomes dull, if the edge of the blade is chipped, or if the cutting quality is lowered, replace the blade with a new blade.

⚠ CAUTION

Be sure to perform operations as specified by the instructions, and never touch any area not specified in the instructions.

Otherwise sudden movement of the machine may cause injury.

⚠ CAUTION

Never touch the tip of the knife with your fingers.

Doing so may result in injury. The cutting performance of the blade will also be impaired.

Required item
Replacement blade

1. Replace the blade.

Procedure

1. **Remove any media.**
2. **Press [MENU].**
3. **Press [▼] several times to display the following screen.**

4. **Press [▶] once, and then press [▼] several times to display the screen shown below.**

5. **Press [▶] once, and then press [▼] several times to display the screen shown below.**

6. **Press [ENTER].**

   The cutting carriage moves to a position where replacement is possible.

7. **When the following screen is displayed, open the front cover.**

```
OPEN FRONT
      COVER
```

Preparation is complete once the following screen is displayed.

```
FINISHED?
                ↵
```

8. **Detach the blade holder.**

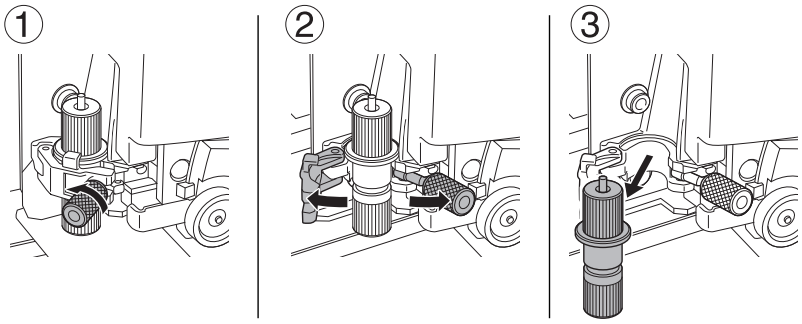

9. **Replace the blade.**

(1) **Press the pin (A) to push out the old blade (B).**

(2) **Insert a new blade (C).**

Orient the tip of the blade (D) correctly.

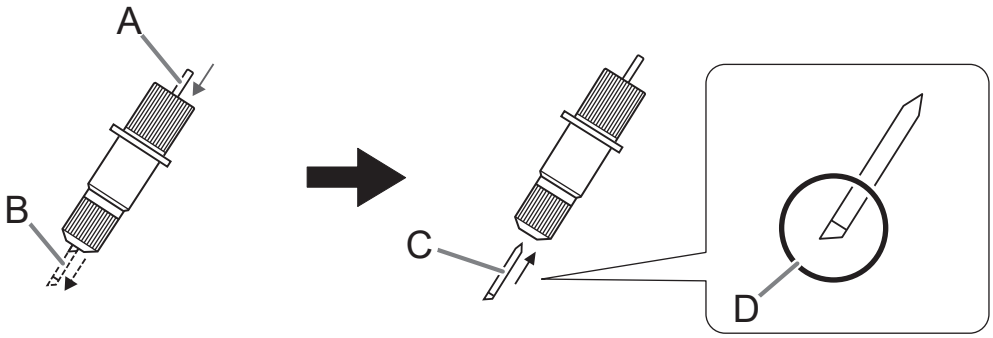

10. **Install the blade holder into the cutting carriage.**

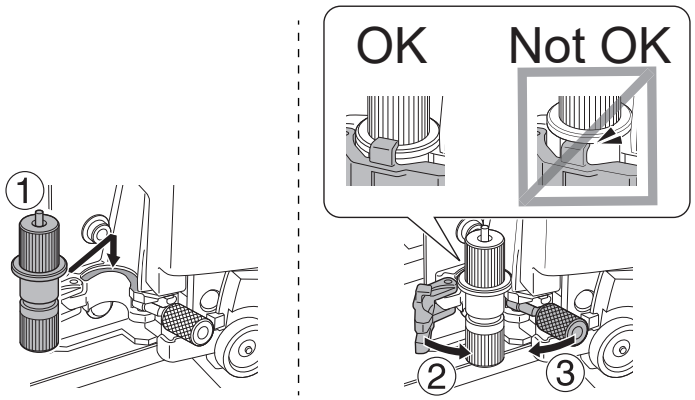

11. **Tighten the screw.**

Tug the blade holder upward to make sure it does not come loose.

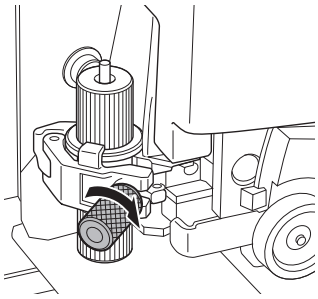

12. **Close the front cover.**

13. **Press [ENTER].**

When the following screen is displayed again, the blade replacement is finished.

14. **Press [MENU] to return to the original screen.**

2. Make adjustments according to the new blade.

Procedure

1. **Load the media.**

   P. 30Setup of Media

2. **Press [◀], [▶], [▲], or [▼] to move the cutting carriage to the location where you want to carry out the cutting test.**

   You can freely set the location for the cutting test.

3. **Press [FUNCTION].**

4. **Press [▼] several times to display the following screen.**

5. **Press [▶] to display the following screen.**

6. **Press [ENTER].**

   The test pattern is cut.

7. **When the cutting of the test pattern is finished, press [▼].**

8. **Check the results of the cutting test.**

   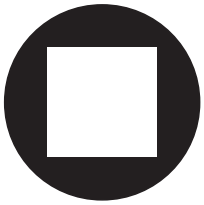

Check item	Result	Setting item	Adjustment
Check the shape.	The cut shape is distorted.	"SPEED"	Reduce
Peel off the circle.	The square also peels off.	"FORCE"	Increase
	Some uncut areas remain.	"SPEED"	Reduce
Peel off the square.	The blade leaves faint traces on the backing paper.	"FORCE"	No change
	The blade trace is indistinct.		Increase
	The blade trace is too deep and cuts into the backing paper.		Reduce

Check item	Result		Setting item	Adjustment
Check the shape of the square you have peeled off.		The corners are not rounded and do not have "horns."	"OFFSET"	No change
		The corners are rounded.		Increase
		The corners have "horns."		Reduce

9. **Press [▲] or [▼] to select the cutting condition you want to set.**

Display screen (cutting conditions)	Setting details	Default settings
CUT CONFIG FORCE	Set the force (pressure) of the blade.	50 gf
CUT CONFIG SPEED	Set the speed of cutting.	30 cm/s
CUT CONFIG OFFSET	Set the blade offset. Enter the listed offset value for the blade. The offset value for the included blade is 0.250 mm (9.84 mil).	0.250 mm (0.010 in.)
CUT CONFIG UP-SPEED	Set the blade's up speed during cutting (the speed at which the blade travels when it moves to the next cutting line after cutting one cutting line). If the media comes loose during no-load feed and the blade damages the surface of the media, reduce the speed.	30 cm/s

10. **Press [▶] to display the following screen.**

11. **Press [▲] or [▼] to select a value.**

12. **Press [ENTER] to confirm your entry.**

13. **Press [◀] to go back to step 9.**

Repeat steps 9 to 12 to adjust the cutting conditions.

14. **Press [FUNCTION] to return to the original screen.**

3. Accurately adjust the cutting-in amount.

Making the amount of blade extension too small may cause the tip of the blade holder cap to touch the printed surface, soiling and damaging it. It is important to be especially careful about this when you are using media that has poor ink-adhesion properties.

The amount of blade extension (③) is 0 mm (①) at minimum and 2.5 mm (98.4 mil) (②) at maximum.

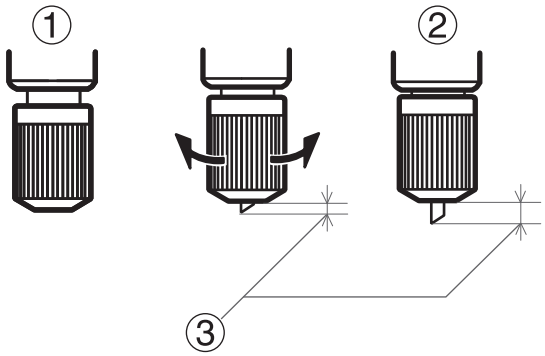

- **Rough Estimate for the Amount of Blade Extension (When Creating a Sticker)**

  Set the amount of blade extension (①) to an amount that is the sum of the thickness of the material portion (②) and half (④) the thickness of the backing paper (③).

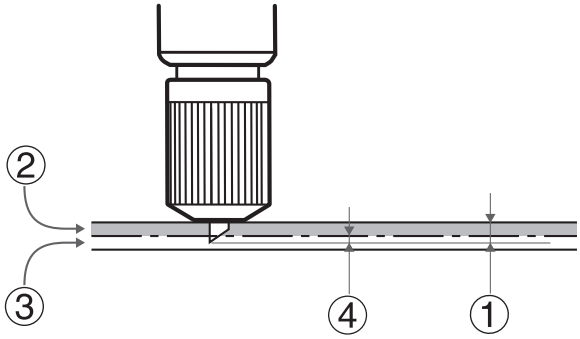

- **Rough Estimate for the Amount of Blade Extension (When Cutting Perforated Lines)**

  Set the amount of blade extension (①) so that when the cutter pierces the media (②), the blade extends slightly.

  For information about the output settings for cutting perforated lines, refer to the documentation for VersaWorks.

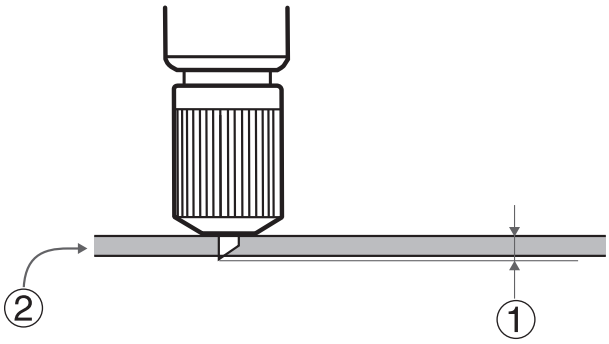

IMPORTANT

Pushing the blade out too far will damage the blade and blade protector and hasten their deterioration, so exercise caution.

RELATED LINKS

- VersaWorks manual (https://downloadcenter.rolanddg.com/VersaWorks6)

Replacing the Separating Knife

If the separating knife becomes dull, replace it with the included replacement knife.

⚠ CAUTION

Be sure to perform operations as specified by the instructions, and never touch any area not specified in the instructions.
Otherwise sudden movement of the machine may cause injury.

⚠ CAUTION

Do not touch the tip of the separating knife.
Doing so may result in injury.

Required item
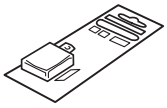
Replacement blade for separating knife

Procedure

1. **Remove any media.**
2. **Press [MENU].**
3. **Press [▼] several times to display the following screen.**

4. **Press [▶] once, and then press [▼] several times to display the screen shown below.**

5. **Press [▶] once, and then press [▼] several times to display the screen shown below.**

6. **Press [ENTER].**
   The cutting carriage moves to a position where replacement is possible.
7. **When the following screen is displayed, open the front cover.**

   Preparation is complete once the following screen is displayed.

FINISHED?
↵

8. **Remove the separating knife.**

(1) **Loosen the screw until it slips out.**

(2) **Grasp the screw portion, and slowly pull in the direction of the arrow.**

When doing this, do not pull it back toward you.

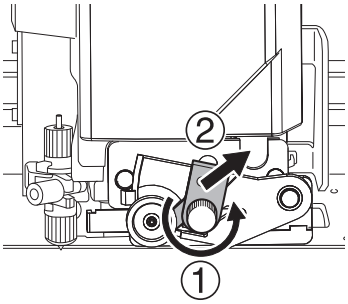

9. **Install a new knife.**

Slide the knife to align it with the groove (①). The knife is secured in place by the magnet(②).

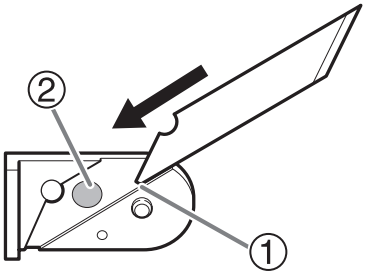

10. **Slowly insert the knife into the groove.**

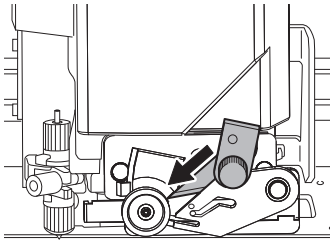

11. **Tighten the screw.**

Take care to ensure that the knife does not slip out of position at this time.

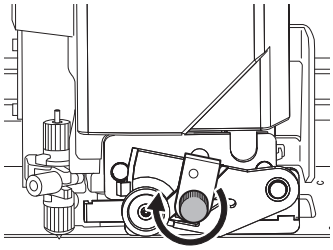

12. **Close the front cover.**

13. **Press [ENTER].**

When the following screen is displayed again, the blade replacement is finished.

14. **Press [MENU] to return to the original screen.**

Inquiries for Consumable Parts and Products

Items That You Can Purchase and Replace by Yourself

To purchase the following consumable parts or products, contact your authorized Roland DG Corporation dealer or visit our website (https://www.rolanddg.co.jp/).

Item	Related page
Wiper	P. 287Replacing the Wiper
Felt wipers	P. 291Replacing the Felt Wiper
Cleaning sticks	P. 259Manual Cleaning
Cleaning liquid	
Blade	P. 294Replacing the Blade
Separating knife	P. 301Replacing the Separating Knife

Items That Require Inquiries before Replacement

When replacing the following consumable parts, contact your authorized Roland DG Corporation dealer.

Item	Related page
Print heads	P. 259Manual Cleaning

Troubleshooting Methods

Output Quality Problems

Printed results are coarse or contain horizontal stripes 307
- Do the print heads cause dot drop-out? 307
- Is the print head height appropriate? 307
- Have you carried out feed correction? 307
- Have you carried out ink landing position correction "MEDIA GAP ADJ."? 307
- Is the printer installed in a level and stable location? 307
- Is the print mode suitable? 308
- Is the media loaded correctly? 308
- Are the settings for the "PRESET" menu item appropriate? 308

The media becomes soiled when printed 309
- Do the print heads come into contact with the media? 309
- Are the print heads dirty? 309
- Are the pinch rollers or the media clamps dirty? 309

Colors are unstable or uneven 310
- Did you shake the ink cartridges before installing them? 310
- Is the media wrinkled? 310
- Was printing paused partway through? 310
- Was cleaning performed during printing? 310
- Is the printer installed in a level and stable location? 310
- Is the media loaded correctly? 310
- Are the operating parameters set to appropriate values? 311
- Are the settings for the "PRESET" menu item appropriate? 311
- Are the irradiation windows of the UV-LED devices dirty? 311

Cutting Is Misaligned or Skewed 312
- Is the media loaded correctly? 312
- Are the settings for the cutting conditions appropriate? 312
- Is the length of output too long? 312
- Are you using media that exhibits large expansion and contraction? 312
- Is the setting for the "CALIBRATION" menu item (under "CUTTING MENU") correct? 312
- Are the pinch rollers placed on the proper locations? 313

Printing and Cutting Are Misaligned 314
- Have you corrected the misalignment of printing and cutting? 314

Printed results are coarse or contain horizontal stripes

Do the print heads cause dot drop-out?

Carry out a printing test and make sure no dot drop-out or dot displacement occurs. If dot drop-out or dot displacement is present, perform head cleaning.

RELATED LINKS

- P. 71Printing Tests and Normal Cleaning
- P. 255When Normal Cleaning Is Not Effective

Is the print head height appropriate?

Printing when the "HEAD HEIGHT" menu item is set to "HIGH" is coarser than when set to "LOW". Keep this set to "LOW" except when changing it is necessary, such as when you are using thick media.

RELATED LINKS

- P. 150Adjusting Print Head Height to Match Media Thickness

Have you carried out feed correction?

Large misalignment in the amount of feed of the media may result in printing that seems coarse or contains horizontal stripes. Either make the setting in the software RIP to match the type of media you are using, or make the setting for correction on the printer.

RELATED LINKS

- P. 148Reducing Horizontal Bands (Feed Correction Function)

Have you carried out ink landing position correction "MEDIA GAP ADJ."?

The optimal adjustment value varies depending on the thickness of the media. Set an adjustment value that is suitable for the media. When further correction is required, such as when adjustment made using "MEDIA GAP ADJ SIMPLE SETTING" does not enhance printing, use "MEDIA GAP ADJ DETAIL SETTING" to make the correction.

RELATED LINKS

- P. 144Adjusting the Misalignment of the Ink Landing Position
- P. 146Accurately Adjusting the Misalignment of the Ink Landing Position

Is the printer installed in a level and stable location?

Never install the machine in a location where it is tilted or where it may wobble or experience vibration. Also make sure that the print heads are not exposed to moving air. These factors may lead to dot drop-out or reduced printing quality.

Is the print mode suitable?

If attractive printing is impossible, try using a higher-quality print mode. Depending on the media, smudging may occur when using a high-quality print mode, and results may also vary greatly depending on the settings of your software RIP (such as the color-profile selection). Select settings appropriate for the media you are using.

Is the media loaded correctly?

If the media is not loaded correctly or the media feed is not smooth, printing may be adversely affected. Load the media correctly.

RELATED LINKS

- P. 30Setup of Roll Media
- P. 49Setup of Sheet Media

Are the settings for the "PRESET" menu item appropriate?

If the settings selected with the "PRESET" menu item are not suitable for the type of media, printing may be adversely affected. Choose settings optimized for the media you are using.

RELATED LINKS

- P. 196Using Presets

The media becomes soiled when printed

Do the print heads come into contact with the media?

The height of the print heads may be too low. Also, if the media is not loaded and set up correctly, it may wrinkle or come loose and contact the print heads.

RELATED LINKS

- P. 30Setup of Roll Media
- P. 49Setup of Sheet Media
- P. 150Adjusting Print Head Height to Match Media Thickness

Are the print heads dirty?

The following may cause ink to drip on the media during printing.

- Buildup of fibrous dust (lint) around the heads
- Ink transferred to the heads due to rubbing against the media

If this happens, perform manual cleaning. We recommend carrying out periodic head cleaning.

- Too low humidity

Use the machine in an environment with a humidity of 20 to 80%RH (no condensation).

RELATED LINKS

- P. 259Manual Cleaning

Are the pinch rollers or the media clamps dirty?

Periodically clean them.

RELATED LINKS

- P. 226Cleaning the Machine

Colors are unstable or uneven

Did you shake the ink cartridges before installing them?

Shake new ink cartridges 50 times (about 20 seconds) before you install them.

Every day before starting work, remove the white ink cartridge, shake it 50 times (about 20 seconds), and then reinsert it.

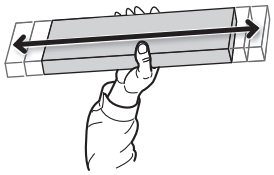

Is the media wrinkled?

If the media is wrinkled and comes loose from the platen, colors may be uneven or the printing quality may suffer.

RELATED LINKS

- P. 30Setup of Roll Media
- P. 49Setup of Sheet Media

Was printing paused partway through?

When printing is paused, the coloring at the seam may be altered when printing resumes. Avoid pausing printing. Before you perform lengthy printing, check the amount of ink remaining. Printing may also pause when data is not sent from the computer quickly enough. We recommend not performing any other tasks with the computer while printing is in progress.

Was cleaning performed during printing?

Performing cleaning during printing can affect the print quality. Check the time until cleaning and the printing time before printing.

RELATED LINKS

- P. 192Avoiding Canceling Due to Cleaning during Printing

Is the printer installed in a level and stable location?

Never install the machine in a location where it is tilted or where it may wobble or experience vibration. Also make sure that the print heads are not exposed to moving air. These factors may lead to dot drop-out or reduced printing quality.

Is the media loaded correctly?

If the media is not loaded correctly or the media feed is not smooth, printing may be adversely affected. Load the media correctly.

RELATED LINKS

- P. 30Setup of Roll Media
- P. 49Setup of Sheet Media

Are the operating parameters set to appropriate values?

Depending on the setting for the "FULL WIDTH S" menu item, uneven colors may occur. If the settings have been changed, try restoring them to their default values.

RELATED LINKS

- P. 201Speeding Up Output for Narrow Media

Are the settings for the "PRESET" menu item appropriate?

If the settings selected with the "PRESET" menu item are not suitable for the type of media, printing may be adversely affected. Choose settings optimized for the media you are using.

RELATED LINKS

- P. 196Using Presets

Are the irradiation windows of the UV-LED devices dirty?

If the irradiation windows are dirty, this can reduce ink adhesion and the quality of the printed materials. Check the level of dirt and clean at the appropriate times.

RELATED LINKS

- P. 243Cleaning That Must Be Performed Once a Month or More

Cutting Is Misaligned or Skewed

Is the media loaded correctly?

If the media is not loaded correctly or the media feed is not smooth, printing may be adversely affected. Load the media correctly.

RELATED LINKS

- P. 30Setup of Roll Media
- P. 49Setup of Sheet Media

Are the settings for the cutting conditions appropriate?

Misalignment or skewing may occur if the cutting speed is too fast or the blade force is too high. Try changing the cutting conditions. With media having a strong adhesive layer, the adhesive layer reattaches to itself immediately after cutting. However, if a cutting test shows that the peeling of the media and the blade traces on the backing paper are optimal, the media is being cut properly. Be careful not to make the blade force too high.

RELATED LINKS

- P. 155Accurately Adjusting the Cutting Settings

Is the length of output too long?

For printing followed immediately by cutting in particular, the longer the page length (that is, the longer the distance the media is returned after printing), the greater the chance of misalignment occurring. It is a good idea to keep the size of each single page to the minimum necessary.

Are you using media that exhibits large expansion and contraction?

When you are performing printing followed immediately by cutting, misalignment occurs if the media expands or contracts. If this happens, try performing printing with crop marks, and then setting the base point and align points and performing cutting. This corrects for the expansion and contraction of the media.

RELATED LINKS

- P. 116Preparations before Cutting with Crop Marks

Is the setting for the "CALIBRATION" menu item (under "CUTTING MENU") correct?

When you are performing printing followed immediately by cutting, go to "CUTTING MENU" and set the "CALIBRATION" value to "0.00".

RELATED LINKS

- P. 164Performing Distance Correction during Cutting

Are the pinch rollers placed on the proper locations?

Be sure to place the pinch rollers on the grit rollers. If the pinch rollers are not placed on the proper locations, misalignment of the media may occur.

RELATED LINKS

- P. 30Setup of Roll Media
- P. 49Setup of Sheet Media

Printing and Cutting Are Misaligned

Have you corrected the misalignment of printing and cutting?

Misalignment between the printing and cutting positions may occur due to the thickness of the media or the head height. Make corrections for misaligned printing and cutting for the media you are using.

RELATED LINKS

- P. 168Accurately Adjusting the Settings for Printing and Cutting

Problems in Cutting with Crop Marks

Automatic Detection of Crop Marks Fails 316
Is the media wrinkled or warped? 316
Is the media size too large?..... 316
Are you using media that is likely to reflect light? 316
Are you using transparent media? 316
Printing and Cutting Are Misaligned 317
Have you corrected the misalignment of printing and cutting with crop marks? 317

Automatic Detection of Crop Marks Fails

Is the media wrinkled or warped?

Wrinkled or warped media may cause crop mark detection to fail. Avoid using wrinkled or warped media.

If the crop marks cannot be detected automatically, you can perform alignment manually.

RELATED LINKS

- P. 174Aligning the Positions of Cutting with Crop Marks Manually
- P. 190Adjusting the Level of the Sensor for Reading Crop Marks According to the Media

Is the media size too large?

Large media may lead to large errors, which may cause crop mark detection to fail.

When you want to use lengthy media, we recommend performing output with the data separated into sizes that are as short as possible.

If the crop marks cannot be detected automatically, you can perform alignment manually.

RELATED LINKS

- P. 174Aligning the Positions of Cutting with Crop Marks Manually

Are you using media that is likely to reflect light?

The machine may not be able to read crop marks from media that is likely to reflect light. Try "CROPSENS CALIB." (the correction function of the sensor for reading crop marks). If the crop marks still cannot be read, change the media you are using.

RELATED LINKS

- P. 187Correcting the Sensor for Reading Crop Marks

Are you using transparent media?

The machine cannot read crop marks from transparent media. Change the media you are using.

Printing and Cutting Are Misaligned

Have you corrected the misalignment of printing and cutting with crop marks?

Depending on the composition of the media, the positioning of printing and cutting may be misaligned even when you are using crop marks. Make corrections for misaligned printing and cutting for the media you are using.

RELATED LINKS

- P. 176Correcting the Misalignment of Printing and Cutting with Crop Marks (Concurrent Test for Printing and Cutting with Crop Marks)
- P. 180Correcting the Misalignment of Printing and Cutting with Crop Marks (Separate Test for Printing and Cutting with Crop Marks)

Media Feed Problems

Media Wrinkles or Shrinks 319
Is the media loaded and set up straight and securely? 319
Are the media clamps attached? 319
Is the humidity of the room too high? 319
Is the media sagging? 319
Media Feeding Is Not Straight 320
Is the media loaded and set up straight and securely? 320
Media Feeding Is Not Smooth 321
Is some other object coming into contact with the media? 321
Is the media too thick? 321
Are the grit rollers dirty? 321
A Media Jam Occurs! 322
Is an error message displayed? 322
Is the media warped or wrinkled? 322
Is the height of the print heads too low? 322
Are the grit rollers dirty? 322
Are the media clamps attached? 322
Is the media loaded and set up straight and securely? 322
Is some other object coming into contact with the media? 323
Is the media too thick? 323

Media Wrinkles or Shrinks

Is the media loaded and set up straight and securely?

Feeding is not smooth when the media is not straight or is tensioned unevenly on the left and right. Reload the media.

RELATED LINKS

- P. 30Setup of Roll Media
- P. 49Setup of Sheet Media

Are the media clamps attached?

When you are performing printing with the head height set to "HIGH" or "LOW", be sure to attach the media clamps.

Is the humidity of the room too high?

Use the machine in an environment of 20 to 80%RH (no condensation).

Is the media sagging?

If sagging media is used, it may come out wrinkled.

Media Feeding Is Not Straight

Is the media loaded and set up straight and securely?

Feeding is not smooth when the media is not straight or is tensioned unevenly on the left and right. Reload the media.

RELATED LINKS

- P. 30Setup of Roll Media
- P. 49Setup of Sheet Media

Media Feeding Is Not Smooth

Is some other object coming into contact with the media?

Make sure the media does not touch anything else. This may affect output, even when the feed appears to be smooth.

RELATED LINKS

- P. 30Setup of Roll Media
- P. 49Setup of Sheet Media

Is the media too thick?

Media that is too thick may not only cause an unstable feed but may scrape the print heads, resulting in a malfunction. Never use such media.

Are the grit rollers dirty?

Check to make sure the grit rollers are free of buildup of foreign material such as media scraps.

RELATED LINKS

- P. 226Cleaning the Machine

A Media Jam Occurs!

Is an error message displayed?

If an error message is displayed because the media has jammed, immediately correct the problem. Doing so may damage the print heads.

RELATED LINKS

- P. 338"MOTOR ERROR TURN POWER OFF"

Is the media warped or wrinkled?

Many factors can cause warping or wrinkling. Refer to the following and correct the problem.

RELATED LINKS

- P. 319Media Wrinkles or Shrinks

Is the height of the print heads too low?

If the media jams, set the print heads to the "HIGH" position. Media may inevitably warp or wrinkle slightly, so adjust the height of the print heads to take this into account.

RELATED LINKS

- P. 150Adjusting Print Head Height to Match Media Thickness

Are the grit rollers dirty?

Check to make sure the grit rollers are free of buildup of foreign material such as media scraps.

RELATED LINKS

- P. 226Cleaning the Machine

Are the media clamps attached?

When you are performing printing with the head height set to "HIGH" or "LOW", be sure to attach the media clamps.

Is the media loaded and set up straight and securely?

Feeding is not smooth when the media is not straight or is tensioned unevenly on the left and right. Reload the media.

RELATED LINKS

- P. 30Setup of Roll Media
- P. 49Setup of Sheet Media

Is some other object coming into contact with the media?

Make sure the media does not touch anything else. This may affect output, even when the feed appears to be smooth.

RELATED LINKS

- P. 30Setup of Roll Media
- P. 49Setup of Sheet Media

Is the media too thick?

Media that is too thick may not only cause an unstable feed but may scrape the print heads, resulting in a malfunction. Never use such media.

Machine Problems

The Print Heads Do Not Move 325
What to Do First 325
If the Print Heads Still Do Not Move 325
The printer unit does not run 327
Is the power switched on? 327
Is [SETUP] lit? 327
Are any covers open? 327
Is the top menu displayed? 327
Is [PAUSE] lit? 327
Is a message displayed on the screen? 327
Are the cables connected? 328
Is the LAN routing appropriate? 328
Are the LAN settings correct? 328
Did the software RIP end abnormally? 328
Has the ink run out? 328
Cannot Separate the Media 329
Is the separating knife installed? 329
Is the cut rail installed? 329
Setup Cannot Be Completed 330
Did you perform manual cleaning? 330

The Print Heads Do Not Move

If the print-head carriage stops over the platen, take action immediately to prevent the heads from drying out.

What to Do First

Switch the sub power off and then back on again. If the media is jammed, also remove the media.

If the print heads move to the home position (inside the right cover), it means the operation has ended successfully.

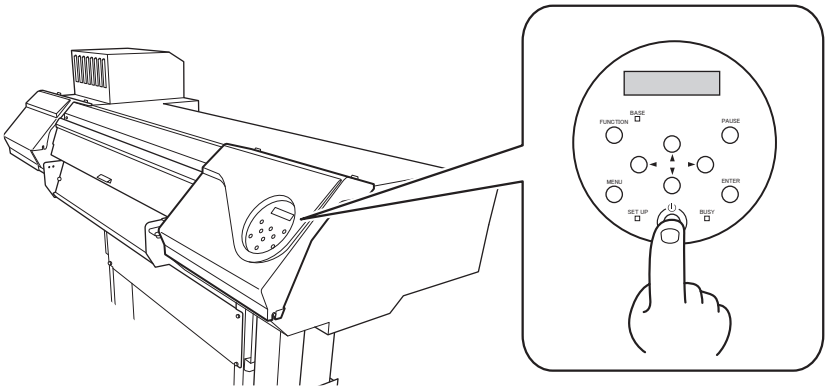

If the Print Heads Still Do Not Move

Try switching off the main power, then switching on the main power again, followed by the sub power.

If the Print Heads Still Do Not Move

If the heads still do not move, carry out the following emergency response measure, and then contact your authorized Roland DG Corporation dealer.

Procedure

1. **Switch off the main power, and then open the front cover.**

2. **Open the right cover.**

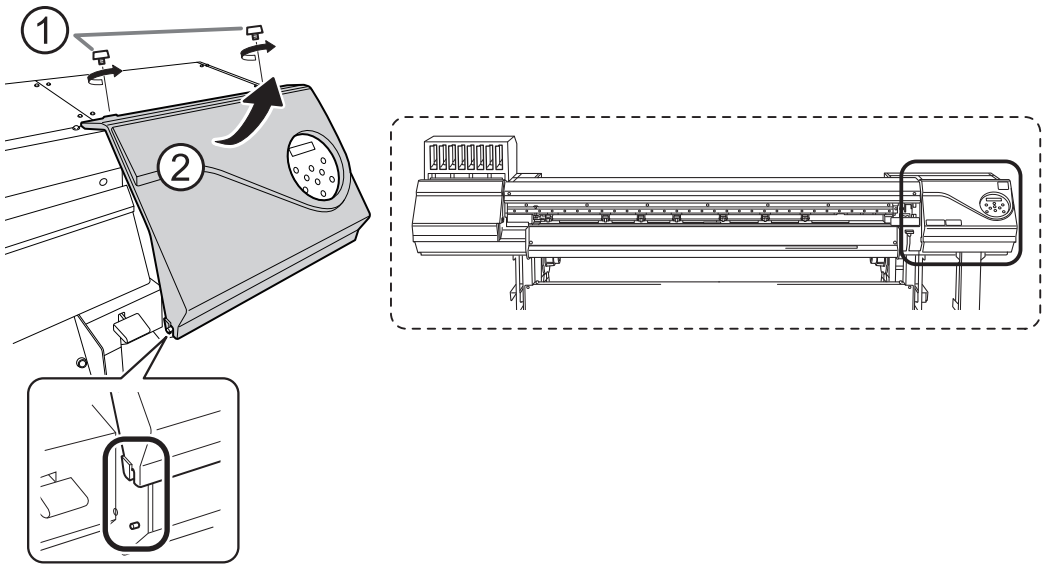

3. **Gently move the print-head carriage to the home position by hand.**

   Stopping at the place where the audible click is heard locks the print-head carriage in place.

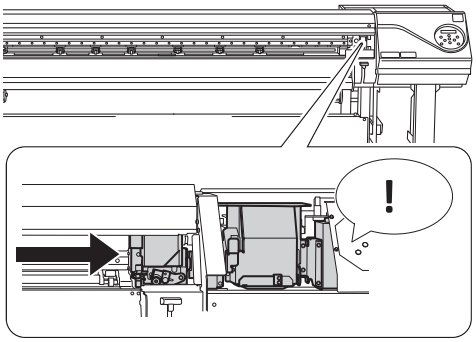

4. **Gently apply pressure from the right side to make sure the print-head carriage does not move to the left.**

   If the print-head carriage moves to the left, again move it slowly by applying pressure from the left side and make sure it locks in place.

The printer unit does not run

Is the power switched on?

Switch on the printer's main power, and then press the sub power switch and make sure the sub power switch lights.

RELATED LINKS

- P. 25Turning the Power On

Is [SETUP] lit?

Output is not performed when [SETUP] is not lit. After loading the media, lower the loading lever, and then press [ENTER].

RELATED LINKS

- P. 82Starting Output

Are any covers open?

Close the front, left, and right covers and the rear UV shield.

Is the top menu displayed?

Top menu

If the top menu isn't displayed, output doesn't start even when data is sent from the computer. To go to the top menu, press [MENU].

RELATED LINKS

- P. 82Starting Output

Is [PAUSE] lit?

When [PAUSE] is lit, operation is paused. To resume, press [PAUSE]. [PAUSE] turns off and output resumes.

RELATED LINKS

- P. 66Pausing and Canceling Output

Is a message displayed on the screen?

RELATED LINKS

- P. 332Messages

- P. 335Error Messages

Are the cables connected?

Connect the cables securely.

RELATED LINKS

- MG-640 Setup Guide (https://downloadcenter.rolanddg.com/MG-640)

Is the LAN routing appropriate?

Check whether or not the network routing is appropriate. Try connecting the computer and the machine to the same hub or connecting them directly using a cable. If this makes it possible to perform output, it means the problem may be in the network itself.

Are the LAN settings correct?

If the cable connections are secure and no problem is found in the network itself, make sure that the IP address and other such settings are appropriate. The settings on both the machine and the computer must be appropriate. Redo the settings, checking to ensure that the IP address does not conflict with the IP address for another device on the network, that the port setting for the software RIP specifies the IP address set on the machine, that the settings have no typing errors, and for other such problems.

RELATED LINKS

- P. 216Viewing System Information
- MG-640 Setup Guide (https://downloadcenter.rolanddg.com/MG-640)

Did the software RIP end abnormally?

Make sure the software RIP is running correctly, and then switch the sub power switch off and back on.

RELATED LINKS

- VersaWorks manual (https://downloadcenter.rolanddg.com/VersaWorks6)

Has the ink run out?

When the screen shown in the figure is displayed, output data cannot be accepted. The error can be resolved by replacing the ink cartridge with a new one. If there is data that has not yet been output remaining in the machine, output resumes. If there is unsent data in the computer, output resumes when the data is resent.

RELATED LINKS

- P. 67Replacing Ink Cartridges

Cannot Separate the Media

Is the separating knife installed?

If the separating knife is not installed, you cannot separate the media.

RELATED LINKS

- P. 301Replacing the Separating Knife

Is the cut rail installed?

If the cut rail is not installed, you cannot separate the media. If the cut rail is not installed, remove the left cover, and then install the cut rail according to the figure shown below. After installing the cut rail, be sure to attach the left cover.

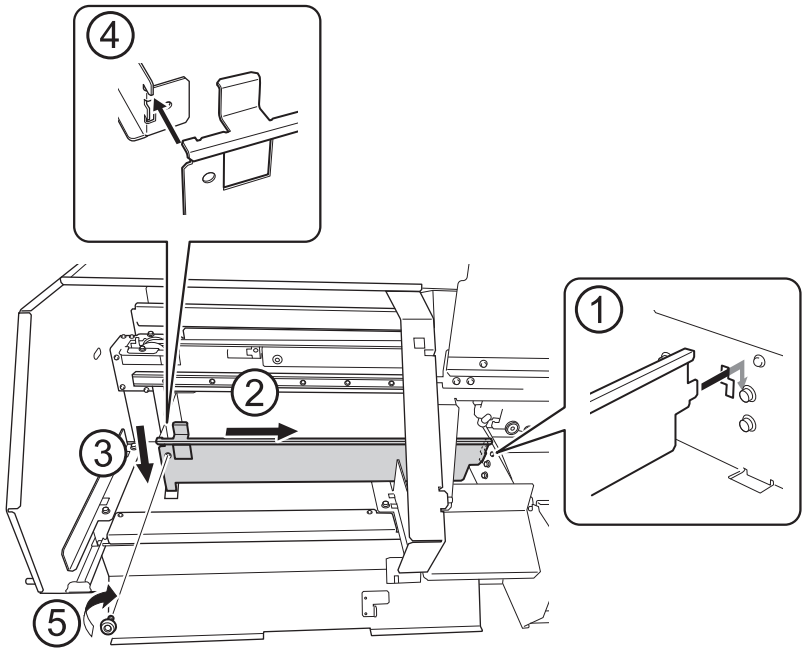

Setup Cannot Be Completed

Did you perform manual cleaning?

If you do not perform manual cleaning, setup cannot be completed.

RELATED LINKS

- P. 260Manual Cleaning Method

Messages on the Operation Panel

Messages 332
"1 ■ 2 ■ 3 ■ 4 ■ 5■ 6 ■ 7 ■ 8 ■" 332
"CLOSE THE COVER" 332
"SHEET NOT LOADED SETUP SHEET" 332
"END OF THE SHEET" 332
"EMPTY DRAIN BOTTLE" 332
"LIMIT OVER EMPTY DRAIN BOTTLE" 332
"INSTALL DRAIN BOTTLE" 332
"TIME FOR FELT REPLACE" 333
"HEAD PROTECTION ACTIVATED" 333
"REMOVE MEDIA CLAMPS" 333
"TIME FOR MAINTENANCE" 333
"MAINTENANCE REQIRED" 333
"TIME FOR WIPER REPLACE" 334
Error Messages 335
"ALIGN POINT POSITION INVALID" 335
"INK SHELF LIFE EXPIRE" 335
"CROPMARK ERROR NOT FOUND" 335
"CAN'T PRINT CROP CONTINUE?" 336
"TEMPERATURE IS TOO HIGH **° C" 336
"SERVICE CALL ****" 336
"SHEET TOO SMALL CONTINUE?" 336
"SHEET SET ERROR SET AGAIN" 336
"TEMPERATURE IS TOO LOW **° C" 337
"DATA ERROR CANCELING..." 337
"PINCHROLL ERROR LOWER PINCHROLL" 337
"PINCHROLL ERROR INVALID RIGHT(LEFT) POS" 337
"PINCHROLL ERROR 2ND FROM RIGHT" 337
"WRONG CARTRIDGE 12345678" 337
"AVOIDING DRY-UP TURN POWER OFF" 337
"SET HEAD HEIGHT TO ****" 338
"CANCELED FOR PUMP PROTECTION" 338
"MOTOR ERROR TURN POWER OFF" 338

Messages

These are the main messages that appear on the machine's display to prompt correct operation. They do not indicate any error. Follow the prompts and take action accordingly.

"1 ■ 2 ■ 3 ■ 4 ■ 5■ 6 ■ 7 ■ 8 ■"

Only a small amount of ink remains.

Replace the ink cartridge indicated by the flashing number with a new cartridge.

"CLOSE THE COVER"

The front, left, or right cover or the front or rear UV shield is open. For safety, some carriage operations are limited while a cover is open.

Close the front, left, and right covers and the front and rear UV shields.

"SHEET NOT LOADED SETUP SHEET"

This message appears when an attempt to perform a printing test was made while no media was loaded.

Load media.

"END OF THE SHEET"

The trailing edge of the media was detected during operation.

Press any key on the operation panel to clear the message. Load new media.

"EMPTY DRAIN BOTTLE"

This message appears when a certain amount of discharged fluid collects in the drain bottle.

Discard the discharged fluid in the bottle.

RELATED LINKS

- P. 252If the Discharged Fluid Disposal Message Appears

"LIMIT OVER EMPTY DRAIN BOTTLE"

This message is displayed when the drain bottle has reached its limit for discharged fluid.

When this message is displayed, immediately discard the discharged fluid.

RELATED LINKS

- P. 252If the Discharged Fluid Disposal Message Appears

"INSTALL DRAIN BOTTLE"

Check whether the drain bottle is installed correctly.

Install the drain bottle, and then press [ENTER].

RELATED LINKS

- P. 250Disposing of Discharged Fluid

"TIME FOR FELT REPLACE"

It is time to replace the felt wiper.

After verifying the message, press [ENTER], and then replace the felt wiper.

RELATED LINKS

- P. 291Replacing the Felt Wiper

"HEAD PROTECTION ACTIVATED"

The ink in use may not be a product specified by Roland DG Corporation.

To clear the message, press [ENTER]. To obtain optimal performance, we recommend that you use ink specified by Roland DG Corporation. To purchase ink, contact your authorized Roland DG Corporation dealer.

"REMOVE MEDIA CLAMPS"

When the head height is set to "SpLOW" or there is a possibility of contacting the print head, this message is displayed to prompt you to remove the media clamps.

Remove the media clamps, and then press [ENTER].

RELATED LINKS

- P. 74Adjust the print head height.

"TIME FOR MAINTENANCE"

The machine is in a state in which it is recommended to perform manual cleaning.

The user attempted to print after a length of time exceeding the threshold had passed since manual cleaning was last performed. Press [ENTER] to clear the message, and then perform manual cleaning.

RELATED LINKS

- P. 259Manual Cleaning

"MAINTENANCE REQIRED"

The print data was received, but printing is not possible.

The received print data is canceled automatically and is not printed. Continuing printing in this situation may damage the print heads, so perform manual cleaning.

If you do not perform manual cleaning, you will not be able to perform any further printing. Press [ENTER] to clear the setup status and switch to the screen for selecting the media type.

RELATED LINKS

- P. 259Manual Cleaning

"TIME FOR WIPER REPLACE"

It is time to replace the wipers.

After verifying the message, press [ENTER], and then replace the wiper.

RELATED LINKS

- P. 287Replacing the Wiper

Error Messages

This section describes the error messages that may appear on the machine's display, and how to take action to remedy the problem. If the action described here does not correct the problem or if an error message not described here appears, contact your authorized Roland DG Corporation dealer.

"ALIGN POINT POSITION INVALID"

An attempt was made to set an align point at a location where the setting cannot be made.

No align point can be set such that the angle between the base point and the align point is too large. Reload the media correctly, so that the angle is minimized, and then set the base point and the align points again to match the crop marks.

RELATED LINKS

- P. 115How to Cut with Crop Marks

"INK SHELF LIFE EXPIRE"

One of the ink cartridges has expired.

The numbers of the cartridges whose ink has exceeded its shelf life flash. After pressing [ENTER], replace the cartridge indicated by the flashing number.

This message is displayed when the sub power is turned on for the first time after the ink has expired. A buzzer sounds at the same time the message is displayed.

You can still continue to use the printer without replacing the ink cartridge. However, continuing to use an ink cartridge that has exceeded its shelf life may lead to the following problems and malfunction.

- Ink leaks from the ink cartridge.
- The ink viscosity increases, leading to ink discharge issues (which may result in decreased output quality).
- The ink hardens, leading to printer malfunctions.

We recommend that you replace any expired ink cartridges. For information about purchasing ink cartridges, contact your authorized Roland DG Corporation dealer or visit our website (https://www.rolanddg.co.jp/).

"CROPMARK ERROR NOT FOUND"

Automatic detection of crop marks could not be accomplished.

Load the media at the correct position and perform detection of crop marks again. If repeating automatic crop-mark detection also results in an error, use "CROPSENS CALIB." (the correction function of the sensor for reading crop marks) to perform correction. However, depending on the media, it may not be possible to detect crop marks automatically.

If crop marks cannot be detected, set the crop marks manually.

RELATED LINKS

- P. 115How to Cut with Crop Marks
- P. 174Aligning the Positions of Cutting with Crop Marks Manually
- P. 187Correcting the Sensor for Reading Crop Marks
- P. 316Automatic Detection of Crop Marks Fails

"CAN'T PRINT CROP CONTINUE?"

The size of the data including the crop marks is larger than the printing area of the loaded media.

To continue performing output without correcting this, press [ENTER]. At this time, the crop marks and the portion extending beyond the printing area are not output. To stop output, stop sending data from the computer, and then raise the loading lever. Make the printing area wider, for example, by replacing the media with a larger piece of media, and then send the data again.

The size of the data being output is too small.

Make the horizontal-direction (scan-direction) size of the data at least 60 mm (2.37 in.). To continue performing output without correcting this, press [ENTER]. At this time, the data is output without printing the crop marks. To stop output, stop sending data from the computer, and then raise the loading lever. Change the size of the data, and then send the data again.

"TEMPERATURE IS TOO HIGH **° C"

The temperature of the location where the machine is installed has risen above the ambient temperature at which the machine can operate.

Operation cannot be continued. Turn off the sub power. The displayed temperature is the current ambient temperature of the installation location. Bring the installed location to a temperature at which operation is possible (15 to 32°C [59 to 90°F]), allow the machine to come to room temperature, and then turn on the power.

"SERVICE CALL ****"

An unrecoverable error occurred or part replacement that must be performed by a service technician is required.

Note the number displayed, and then switch off the sub power. After you switch off the power, inform your authorized Roland DG Corporation dealer of the number that appeared on the display.

"SHEET TOO SMALL CONTINUE?"

The size of the data is larger than the printing area of the loaded media

To continue performing output without correcting this, press [ENTER]. At this time, the portion extending beyond the printing area is not output. To stop output, stop sending data from the computer, and then raise the loading lever. Make the printing area wider, for example, by replacing the media with a larger piece of media, and then send the data again.

"SHEET SET ERROR SET AGAIN"

"EDGE DETECTION" is set to "ENABLE", but transparent media was loaded.

Raise the loading lever, set the "EDGE DETECTION" menu item to "DISABLE," and then reload the media. Lower the loading lever, and then press [ENTER].

RELATED LINKS

- P. 30Setup of Roll Media
- P. 49Setup of Sheet Media
- P. 152Disabling Detection of the Edges of the Media

"TEMPERATURE IS TOO LOW **° C"

The temperature of the location where the machine is installed has fallen below the ambient temperature at which the machine can operate.

Operation cannot be continued. Turn off the sub power. The displayed temperature is the current ambient temperature of the installation location. Bring the installed location to a temperature at which operation is possible (15 to 32°C [59 to 90°F]), allow the machine to come to room temperature, and then turn on the power.

"DATA ERROR CANCELING..."

Output was stopped because a problem was found in the received data.

Operation cannot be continued. Completing the data cancellation will clear the message. Check for a problem with the connector cable or the computer, or if the printer data has any defects (a color is designated that cannot be output, etc.). Once the problem or defect has been corrected, send the data again.

"PINCHROLL ERROR LOWER PINCHROLL"

This message appears when the loading lever was raised during initialization or after the media was loaded.

Press any key to clear the error. Alternatively, the error is cleared automatically after a short wait. Never move the loading lever while output is in progress.

"PINCHROLL ERROR INVALID RIGHT(LEFT) POS"

The left (right) pinch roller is positioned at a location where it cannot pinch the media.

Raise the loading lever and move the pinch roller to the correct location.

RELATED LINKS

- P. 30Setup of Roll Media
- P. 49Setup of Sheet Media

"PINCHROLL ERROR 2ND FROM RIGHT"

The location of a middle pinch roller is incorrect.

The location of the displayed middle pinch roller is incorrect. Move the middle pinch roller to the correct location.

"WRONG CARTRIDGE 12345678"

Has an ink cartridge that cannot be used been installed?

Remove the ink cartridge to clear the error. Use an ink cartridge of the specified type.

"AVOIDING DRY-UP TURN POWER OFF"

The print heads were forced to the home position to prevent them from drying out.

Operation cannot be continued. Switch the sub power off, and then back on.

"SET HEAD HEIGHT TO ****"

Is the height of the print heads lower than the height specified in the software RIP?

This warning indicates that the height of the print heads is too low for the head height specified in the software RIP. The print heads move to a location where you can operate the height-adjustment lever. Adjust to the displayed height, and then press [ENTER].

RELATED LINKS

- P. 150Adjusting Print Head Height to Match Media Thickness

"CANCELED FOR PUMP PROTECTION"

The printer made an emergency stop because an error continued for 10 minutes or longer while cleaning (normal, medium, powerful, light choke, or automatic cleaning while sub power was switched off) was in progress or during the first ink filling procedure for the machine.

Operation cannot be continued. Turn off the sub power. After turning the power off, contact your authorized Roland DG Corporation dealer.

"MOTOR ERROR TURN POWER OFF"

A motor error occurred.

Operation cannot be continued. Turn off the sub power. Next, eliminate the cause of the error, then immediately switch on the sub power. If the machine is allowed to stand with the error uncorrected, the print heads may dry out and become damaged. This error may be caused by such factors as a mistake in loading the media, a media jam, or an operation that pulls the media with excessive force.

The media has jammed.

Carefully remove the jammed media. The print heads may also be damaged. Perform head cleaning, and then perform a printing test and check the results.

Has the media been pulled with excessive force?

Excessive tension was applied to the media, and additional action is necessary to recover from this state. First, raise the loading lever and adjust the media to create a small amount of slack, and then switch on the sub power.

Appendix

Operations When Moving the Unit

Preparing to Move the Machine 341
Step 1: Removing Media and the Blade Holder 341
Step 2: Circulating the Ink (Only When Using White Ink) 343
Step 3: Removing the Ink That Has Collected below the Wiper 344
Step 4: Discarding the Discharged Fluid 346
Step 5: Secure the print heads in place using the retainer. 347
Step 6: Reinstalling the Machine 348

Preparing to Move the Machine

Before moving the machine, dispose of the discharged fluid and secure the print heads in place. Also, if you are using white ink, you will have to manually circulate it. Attempting to move the machine without first performing these preparations may result in damage to internal components due to leaking ink or damage to the print heads.

IMPORTANT

- Once the preparations for moving the machine are complete, move the machine promptly and turn on the machine as soon as possible after the machine is relocated. If you leave the machine alone without turning it on, the precipitated ink will coagulate and result in problems such as the clogging of the print heads.
- When moving the machine, keep it at a temperature from 5 to 40°C (41 to 104°F) and at a humidity from 20 to 80%RH (with no condensation). Failure to do so may result in a breakdown.
- Handle the machine with care when moving it, keeping it level (not tilted at an angle) and preventing it from striking other objects.

Step 1: Removing Media and the Blade Holder

Procedure

1. **Remove any media.**

MEMO

If no media is loaded, raise the loading lever.

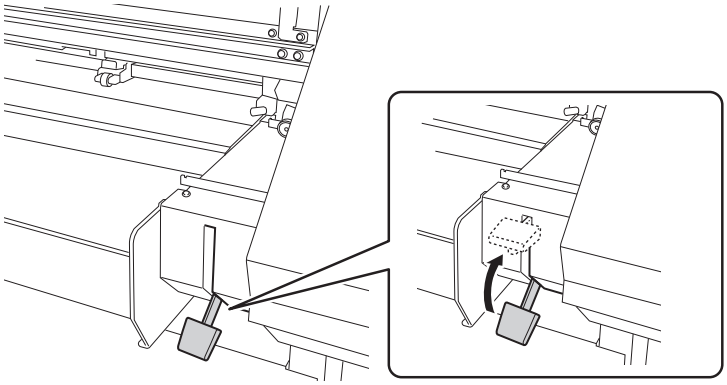

2. **Remove the media clamps.**
3. **Press [MENU].**
4. **Press [▼] several times to display the following screen.**

5. **Press [▶] once, and then press [▼] several times to display the screen shown below.**

6. **Press [▶] once, and then press [▼] several times to display the screen shown below.**

```
MAINTENANCE
REPLACE KNIFE
```

7. **Press [ENTER].**

   The cutting carriage moves to a position where replacement is possible.

8. **When the following screen is displayed, open the front cover.**

```
OPEN FRONT
      COVER
```

   Preparation is complete once the following screen is displayed.

```
FINISHED?
```

9. **Detach the blade holder.**

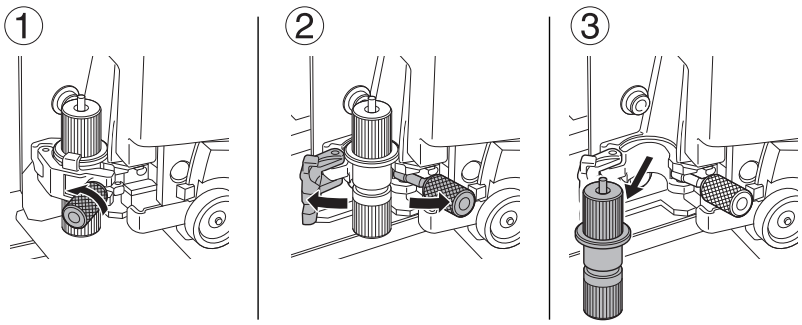

10. **Lightly tighten the cutting carriage screw.**

11. **Close the front cover.**

12. **Press [ENTER].**

13. **Press [MENU] to return to the original screen.**

Step 2: Circulating the Ink (Only When Using White Ink)

* This work is not necessary when using four colors (CMYK). Go to Step 3.

Procedure

1. **Press [MENU].**

2. **Press [▼] several times to display the following screen.**

3. **Press [▶] once, and then press [▼] several times to display the screen shown below.**

4. **Press [▶] once, and then press [▼] several times to display the screen shown below.**

5. **Press [ENTER].**

   The screen shown below appears, and then the ink circulation starts. The (approximate) remaining time for the procedure is displayed on the screen. (The display shown below is an example. "01:45" = "1 minute and 45 seconds")

   Depending on the timing with which the ink circulation is started, the following screen may be displayed and cleaning may start. When cleaning is complete, the ink circulation will start, so wait for the ink circulation to complete. (The display shown below is an example. "01:45" = "1 minute and 45 seconds")

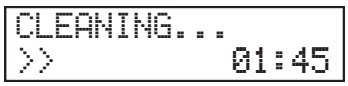

   When finished, the screen shown below appears again.

Step 3: Removing the Ink That Has Collected below the Wiper

Required item
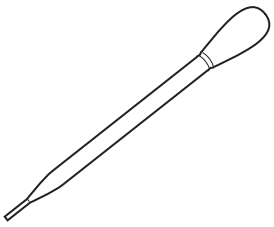
Eye dropper (commercially available item)

Procedure

1. **Press [FUNCTION].**
2. **Press [▶].**
3. **Press [▼] several times to display the following screen.**

4. **Press [ENTER].**

   After "NOW PROCESSING.." is displayed, the screen shown below appears.

   Also, the print head moves to the left end of the platen.

   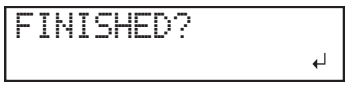

   IMPORTANT

   Do not press [ENTER] at this stage. Press [ENTER] after cleaning is complete. If you press [ENTER] at this stage, wait for the screen to change as shown in the following figure, and then press [ENTER] again.

   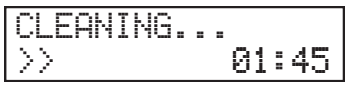

5. **Open the right cover.**

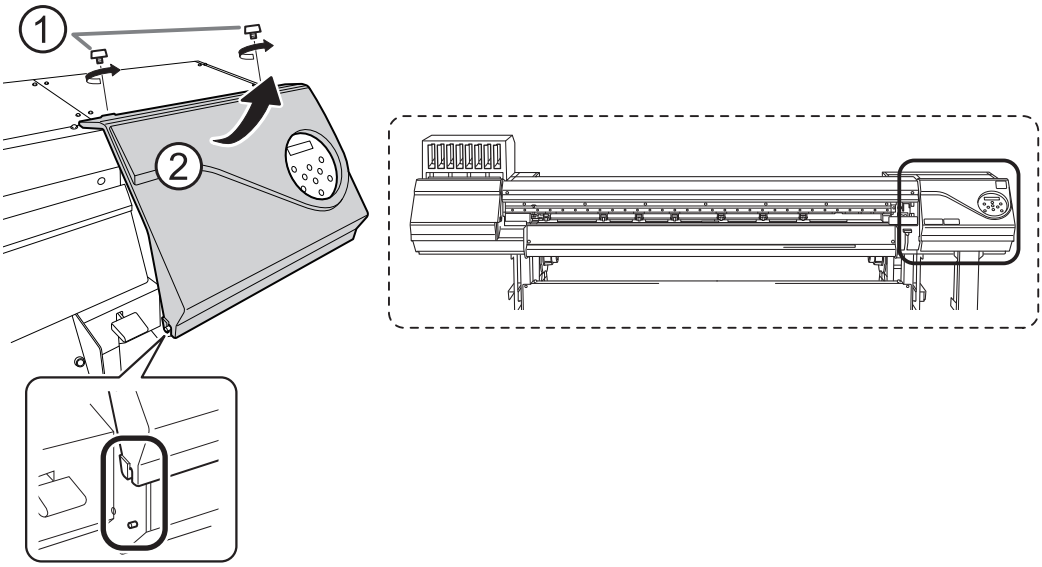

6. **Use a commercially available eye dropper to suction out the ink that has collected in the receptacle below the wiper.**

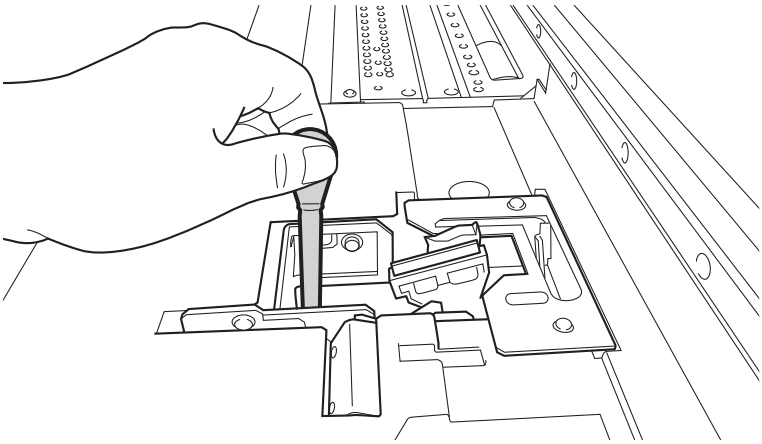

7. **Close the right cover.**

8. **Press [ENTER].**

The screen shown below appears, and then cleaning starts. The (approximate) remaining time for the procedure is displayed on the screen. (The display shown below is an example. "01:45" = "1 minute and 45 seconds")

```
CLEANING...
>>          01:45
```

When cleaning finishes, the screen shown below appears again.

```
CLEANING          ◆▲
MANUAL CL.          ↵
```

9. **Detach the drain bottle.**

10. **Transfer the discharged fluid suctioned out with the eye dropper to the drain bottle, and then return the drain bottle to the bottle stand.**

Step 4: Discarding the Discharged Fluid

Procedure

1. **Remove the drain bottle and discard the discharged fluid.**

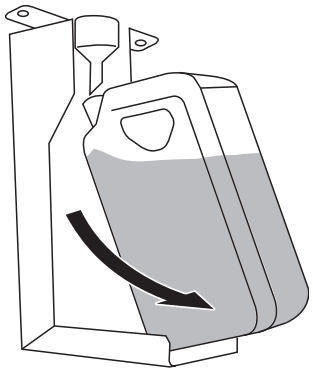

IMPORTANT

When you remove the drain bottle, a few drops of discharged fluid may come out of the machine. Exercise caution to prevent this fluid from soiling your hands or the floor.

⚠ WARNING

Never place discharged fluid or ink near an open flame.
Doing so may cause a fire.

⚠ CAUTION

To store discharged fluid temporarily, place it in the included drain bottle or in a durable sealed container such as a metal can or polyethylene tank, and cap the container tightly.
Any spillage or vapor leakage may cause fire, odor, or physical distress.

IMPORTANT

Dispose of discharged fluid properly, in accordance with the laws in effect in your locale.
Discharged fluid is flammable and contains toxic ingredients. Never attempt to incinerate discharged fluid or discard it with ordinary trash. Also, do not dispose of it in sewer systems, rivers, or streams. Doing so may have an adverse impact on the environment.

2. **Quickly attach the emptied drain bottle to the machine once more.**

Step 5: Secure the print heads in place using the retainer.

Procedure

1. **Switch off the sub power.**
2. **Turn off the main power switch.**
3. **Attach the media clamps.**
4. **Secure the print heads in place using the retainer.**
   Use the retainer that was attached to the bottom of the machine during its installation.

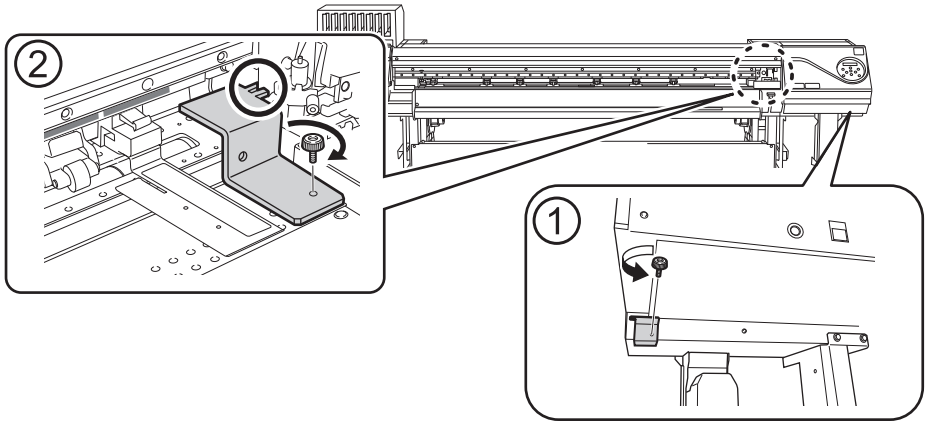

Step 6: Reinstalling the Machine

Procedure

1. **Once the preparations are complete, move the machine with as little delay as possible.**

2. **Reinstall the printer immediately, and then remove the retainer securing the print heads in place.**
   For storage, attach the retainer in the position indicated in the figure.

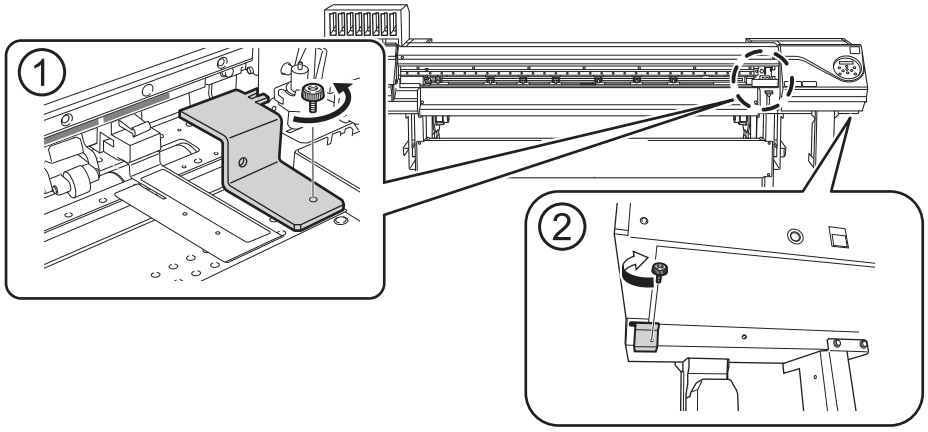

3. **Turn on the main power switch.**

IMPORTANT

To prevent the print heads from being damaged, move the machine with as little delay as possible and switch on the main power as soon as possible after moving the machine. To install the machine again, follow the procedure in the Setup Guide.

4. **Press the sub power button.**

5. **Attach the blade that was removed before moving the machine.**

RELATED LINKS

- P. 30Setup of Media
- P. 294Replacing the Blade

Main Specifications

Printing/Cutting Area 350
Maximum Area 350
Maximum Printing Area When Using Crop Marks..... 351
Media Separation Location during Continuous Printing..... 352
About the Blade..... 353

Printing/Cutting Area

Maximum Area

The printing or cutting area along the horizontal plane (the direction in which the carriages move) is determined by the position of the pinch rollers.

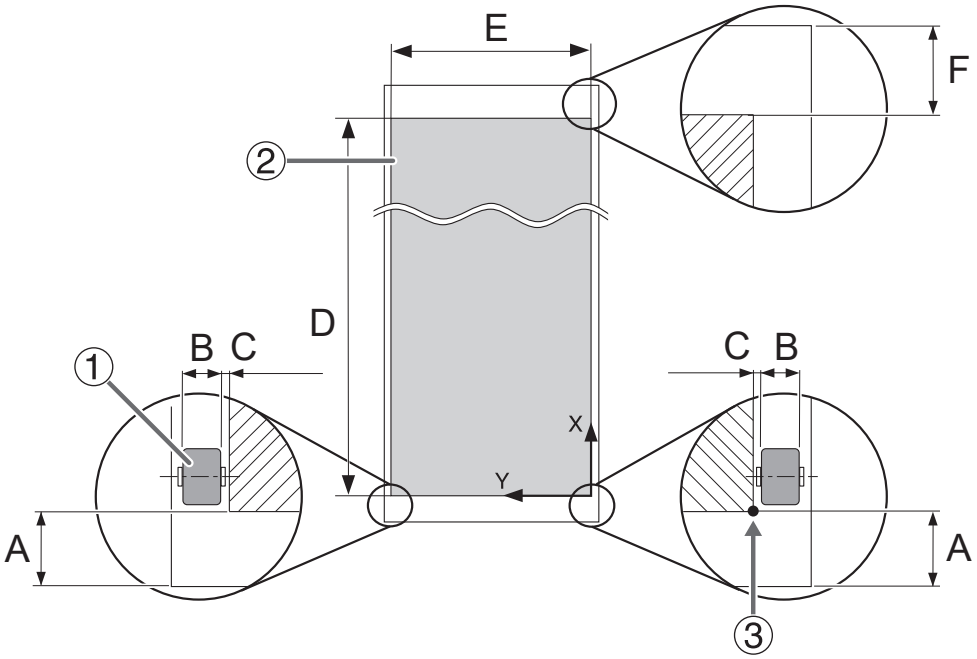

①	Pinch roller
②	Printing or cutting area
③	Printing or cutting coordinates origin (0,0)
A	75 mm (3 in.)
B	10 mm (0.4 in.)
C	1.5 mm (0.06 in.)
D	Max. 24,998 mm (984.2 in.)
E	64-inch model: Max. 1,600 mm (63 in.) 30-inch model: Max. 736 mm (29 in.)
F	105 mm (4.13 in.)

Maximum Printing Area When Using Crop Marks

The maximum printing area when crop marks are used is reduced from the maximum printing area when crop marks are not used by an amount equal to the crop marks.

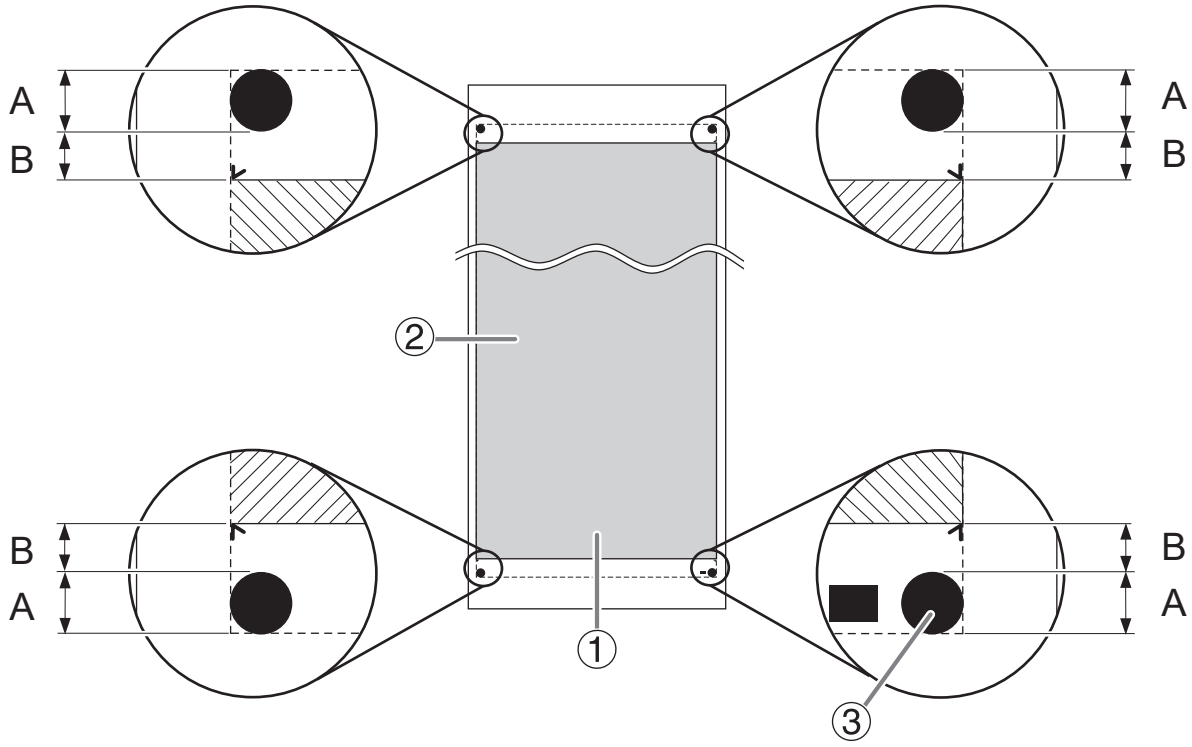

①	Maximum printing area
②	Printing area
③	Crop mark
A	12.5 mm (0.5 in.)
B	10 mm (0.4 in.)

Media Separation Location during Continuous Printing

When a command for separating the media is sent from the computer, the separation location on the media is as shown in the figure below.

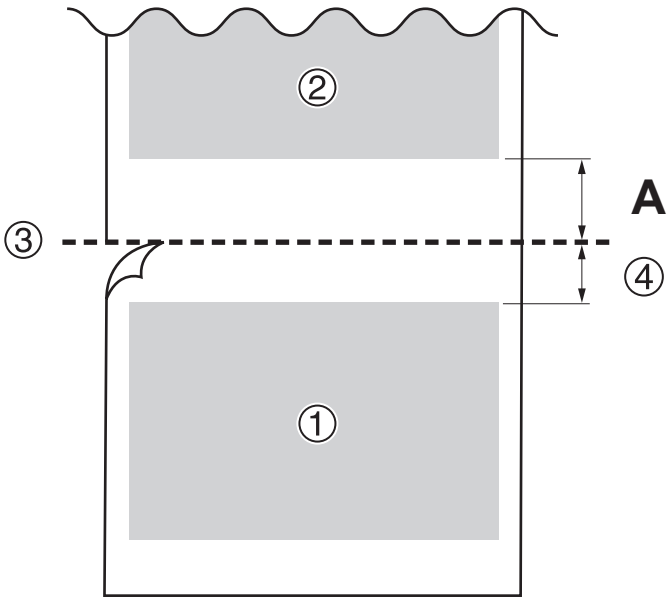

①	First page
②	Second page
③	Separation location
④	Margin (software RIP value)
A	75 mm (3 in.)

About the Blade

The cutting conditions and the service life of the blade change according to the media and the operating environment, even when you're using identical blades. The service life also differs according to the type of blade. A rough guide is shown below.

Blade	Media	Blade force	Amount of blade offset (amount of blade tip correction)	Blade life (general guide)*1
ZEC-U5032	General Signage Vinyl	30 to 100 gf	0.25 mm (0.01 in.)	8,000 mm (26,246.7 ft.)
ZEC-U5025	General Signage Vinyl	30 to 100 gf	0.25 mm (0.01 in.)	4,000 mm (13,123.4 ft.)
	Fluorescent Vinyl	120 to 200 gf	0.25 mm (0.01 in.)	4,000 mm (13,123.4 ft.)
	Fluorescent Vinyl	100 to 200 gf	0.25 mm (0.01 in.)	4,000 mm (13,123.4 ft.)

*1 The values for "Blade life" are estimates for when an identical type of media is used.

When uncut areas remain even when the blade force is increased to a value that is higher than the values shown in this chart by 50 to 60 gf, replace the blade.

Memo

About this Manual 355

About this Manual

This document is the user's manual for the MG-640/300. This document uses the following notations to distinguish between the models where necessary.

- MG-640: 64-inch model
- MG-640: 30-inch model

Most of the figures in this document depict the MG-640.