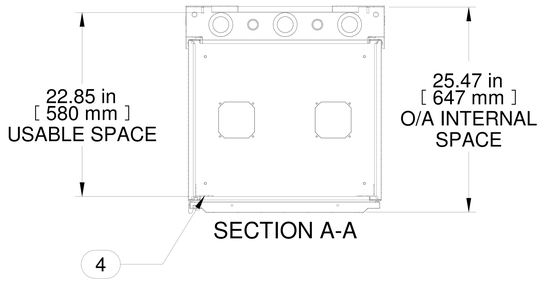

SECTION A-A

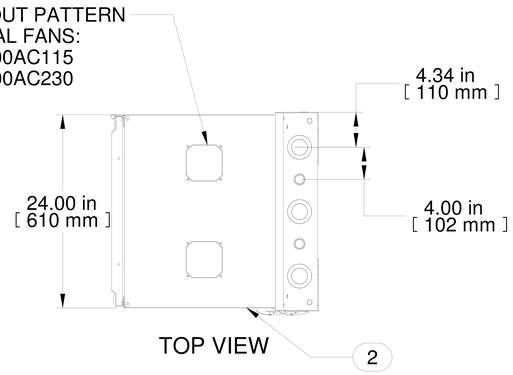

TOP VIEW

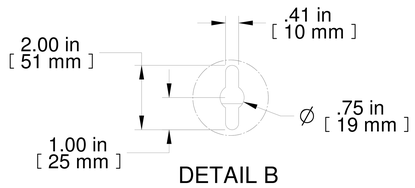

DETAIL B

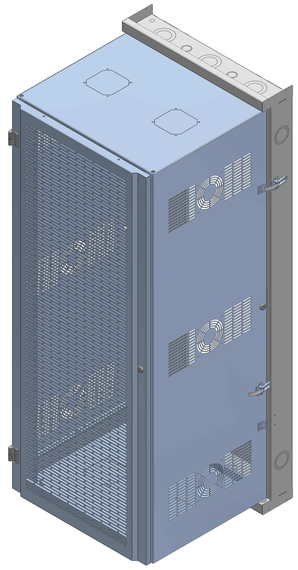

ISOMETRIC

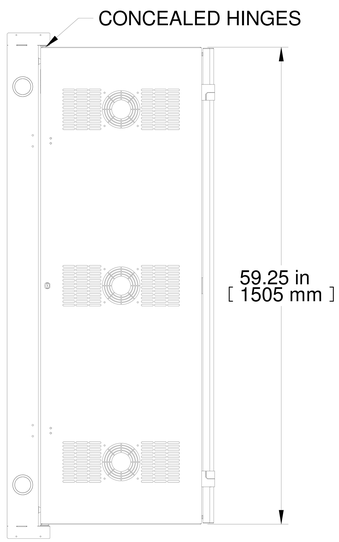

L.S. VIEW

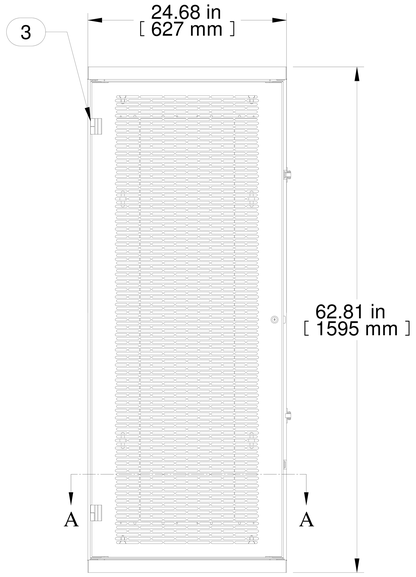

FRONT VIEW

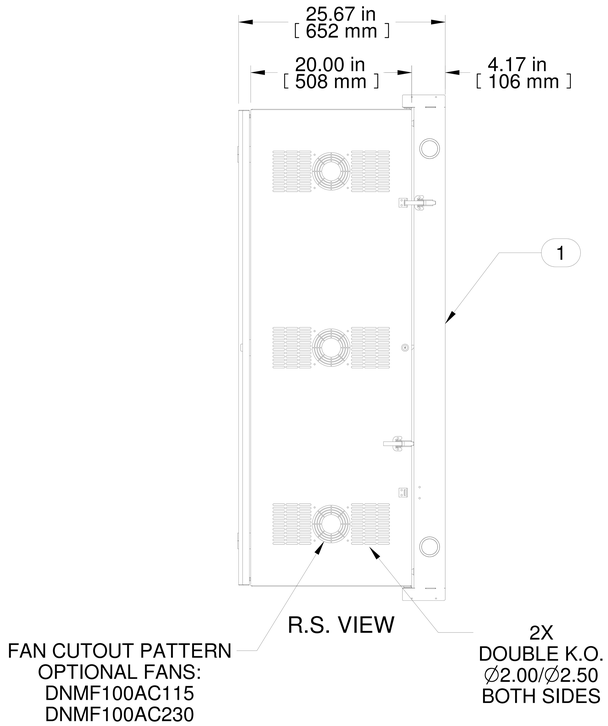

R.S. VIEW

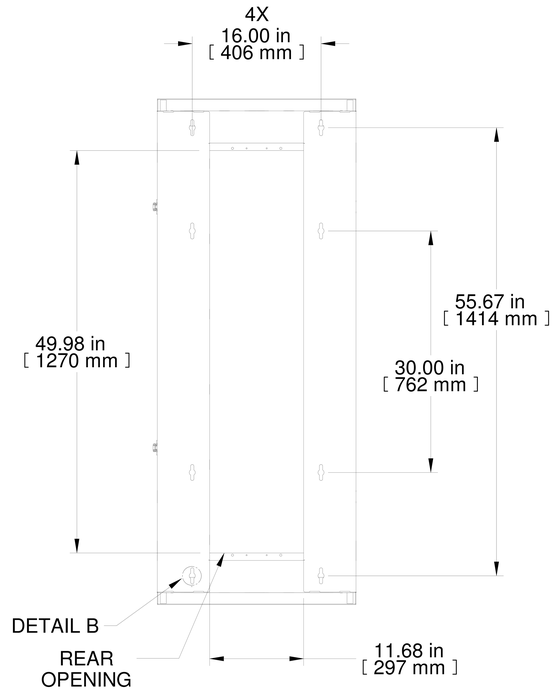

REAR VIEW

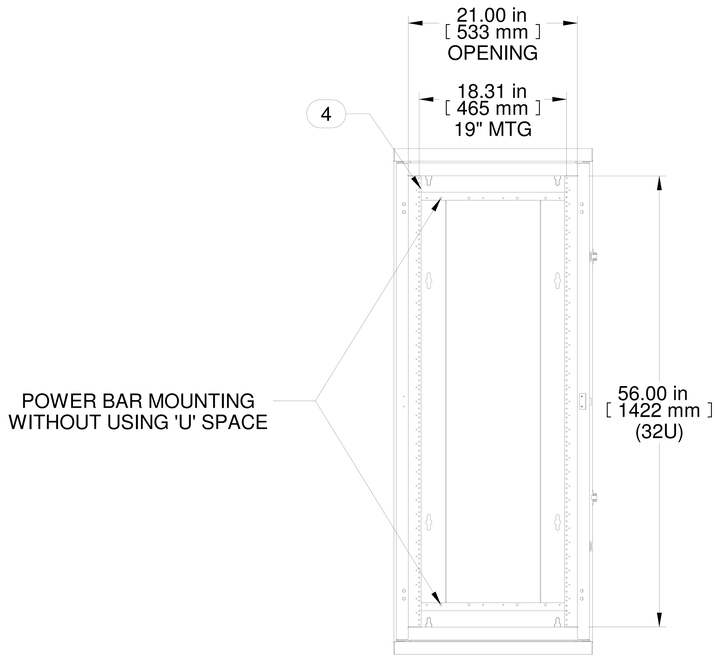

FRONT VIEW
DOOR REMOVED

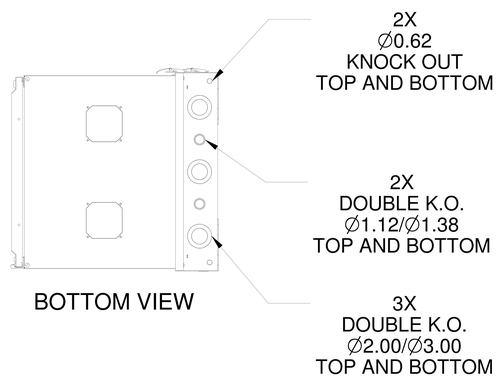

BOTTOM VIEW

Item Number	Title	Quantity
1	HWM REAR SECTION 24W 32U	1
2	HWM - CENTRE SECTION	1
3	HWM - VENTED DOOR ASSY	1
4	19" TAPPED PANEL RAILS (PAIR)	1

PART NUMBERS

HWM2432U20BK	PAINTED BLANK SAND TEXTURED
	VENTED FRONT DOOR

NOTES

See Hammond Website for Aditional Accessories

Français

Pour tous les détails sur nos produits,
svp veuillez consulter notre site www.hammondmfg.com
Data subject to change without notice. Isometric drawing not to scale.
Les données sont sujettes à changement sans préavis.

HAMMOND MANUFACTURING®

www.hammondmfg.com

PART NO. HWM2432U20BK