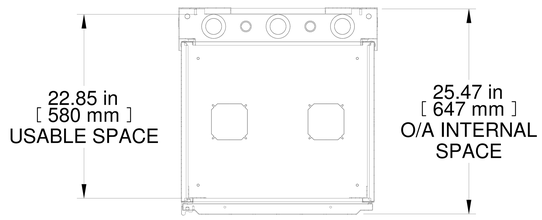

SECTION A-A

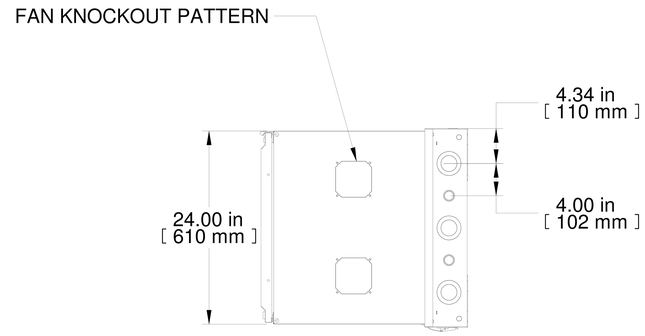

TOP VIEW

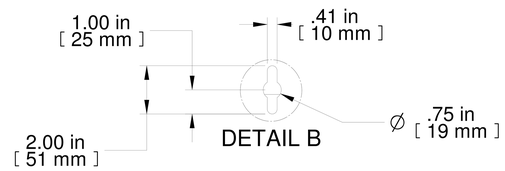

DETAIL B

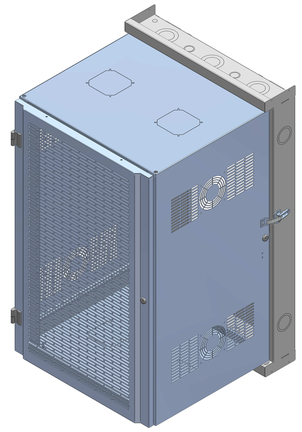

ISOMETRIC

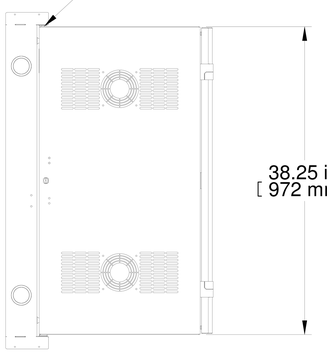

L.S. VIEW

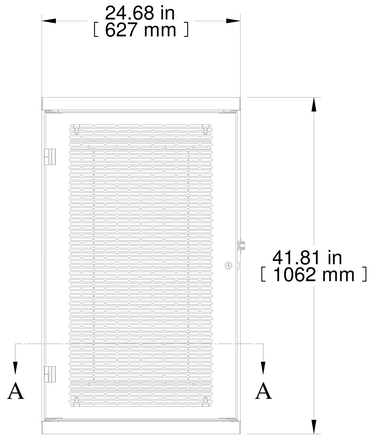

FRONT VIEW

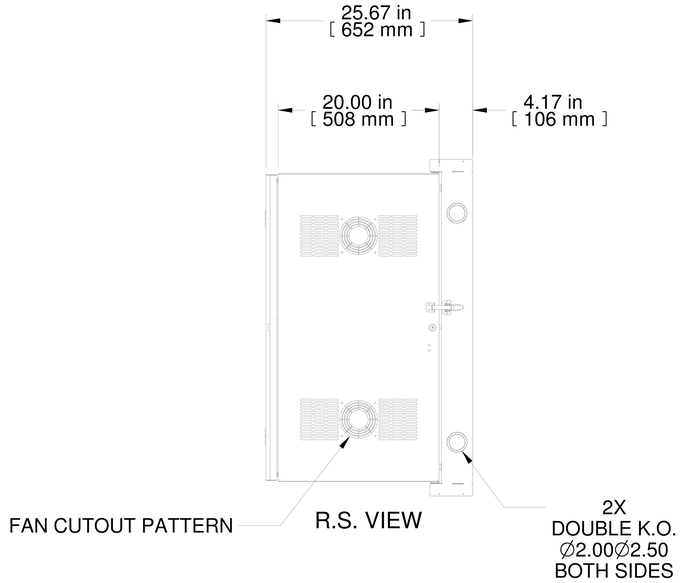

R.S. VIEW

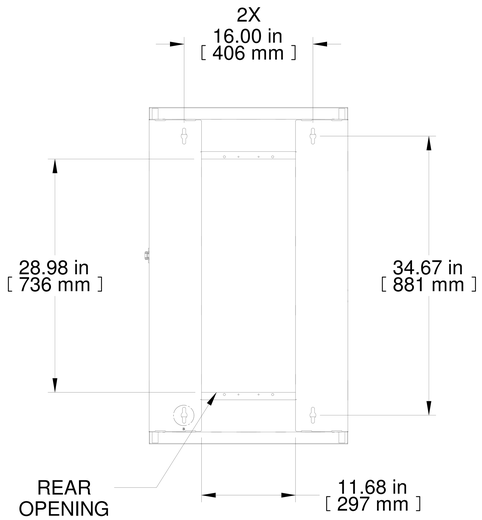

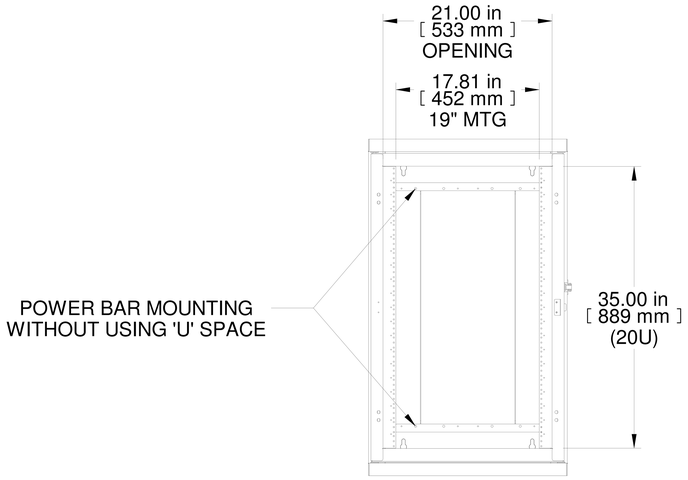

FRONT VIEW
DOOR REMOVED

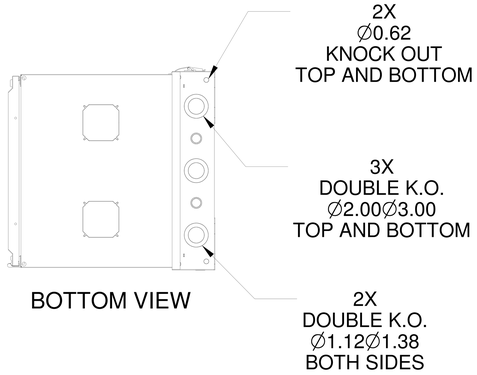

BOTTOM VIEW