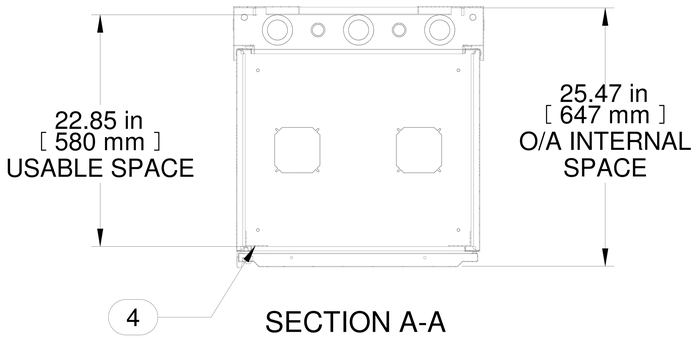
22.85 in
[580 mm]
USABLE SPACE
25.47 in
[647 mm]
O/A INTERNAL
SPACE
4
SECTION A-A

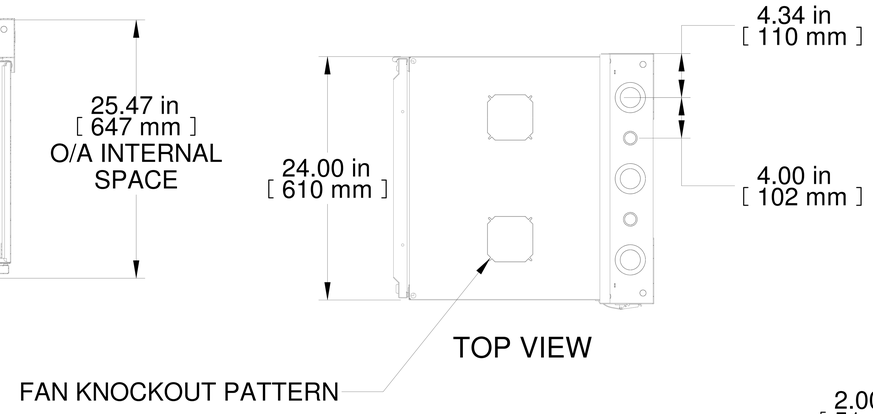
4.34 in
[110 mm]
24.00 in
[610 mm]
4.00 in
[102 mm]
TOP VIEW
FAN KNOCKOUT PATTERN

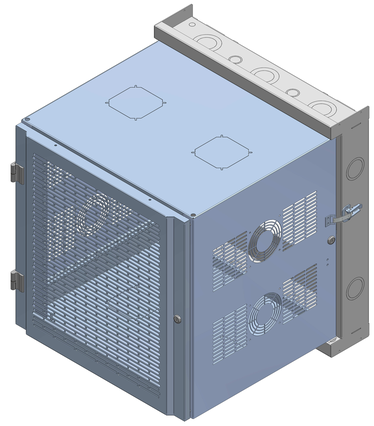
ISOMETRIC

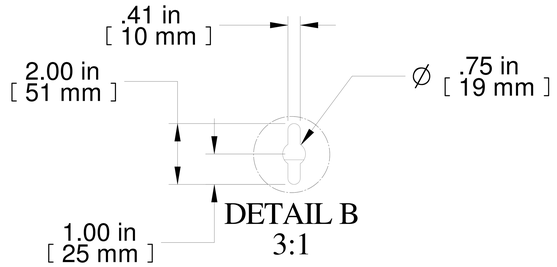
.41 in
[10 mm]
2.00 in
[51 mm]
Ø .75 in
[19 mm]
1.00 in
[25 mm]
DETAIL B
3:1

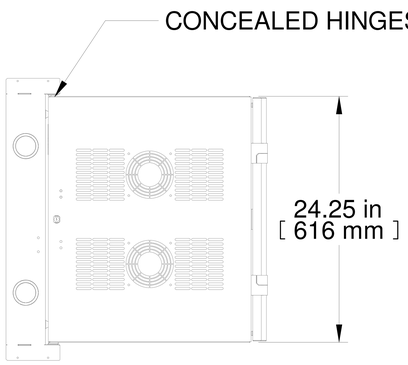
CONCEALED HINGES
24.25 in
[616 mm]
L.S. VIEW

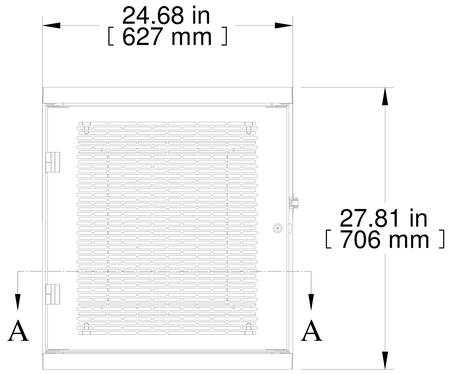
24.68 in
[627 mm]
27.81 in
[706 mm]
A
A
FRONT VIEW

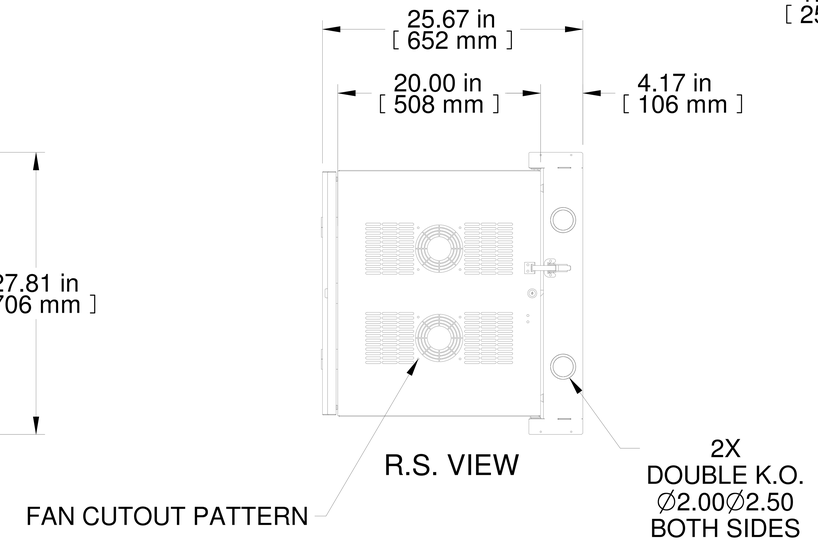
25.67 in
[652 mm]
20.00 in
[508 mm]
4.17 in
[106 mm]
R.S. VIEW
FAN CUTOUT PATTERN
2X
DOUBLE K.O.
Ø2.00Ø2.50
BOTH SIDES

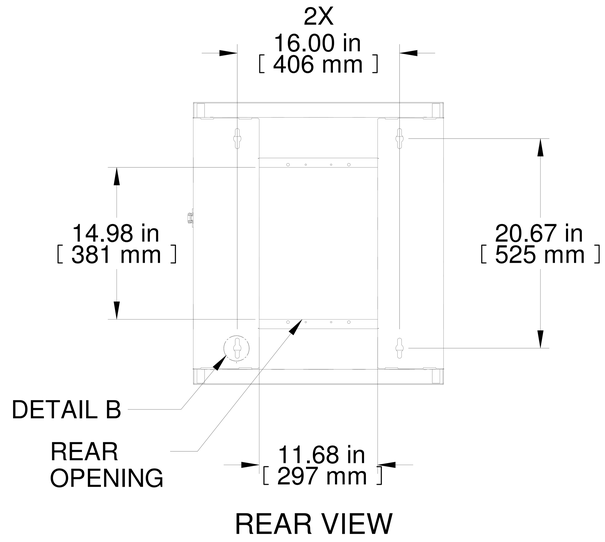
2X
16.00 in
[406 mm]
14.98 in
[381 mm]
20.67 in
[525 mm]
DETAIL B
REAR
OPENING
11.68 in
[297 mm]
REAR VIEW

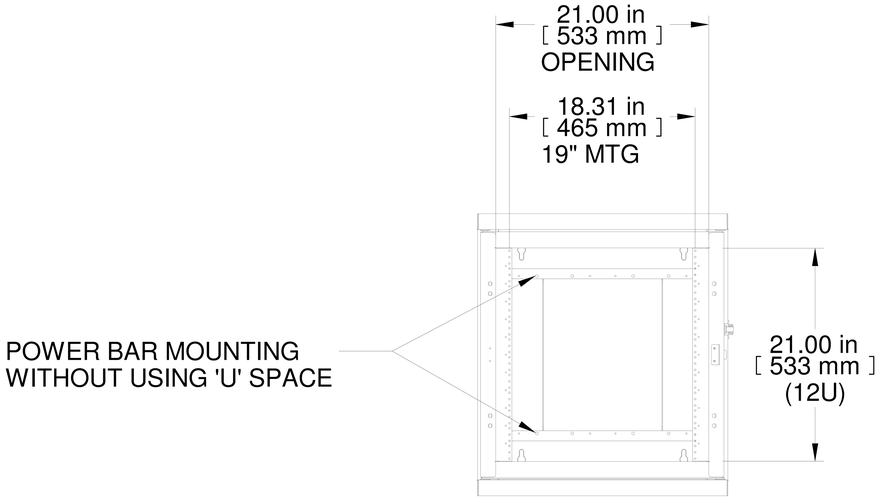
21.00 in
[533 mm]
OPENING
18.31 in
[465 mm]
19" MTG
POWER BAR MOUNTING
WITHOUT USING 'U' SPACE
21.00 in
[533 mm]
(12U)
FRONT VIEW
DOOR REMOVED

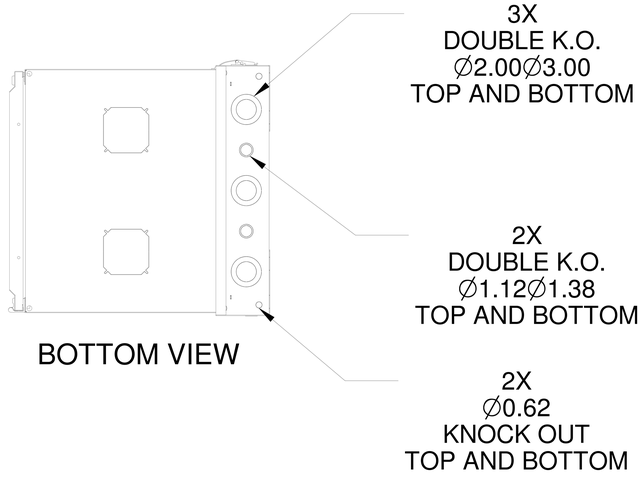
3X
DOUBLE K.O.
Ø2.00Ø3.00
TOP AND BOTTOM
2X
DOUBLE K.O.
Ø1.12Ø1.38
TOP AND BOTTOM
2X
Ø0.62
KNOCK OUT
TOP AND BOTTOM
BOTTOM VIEW