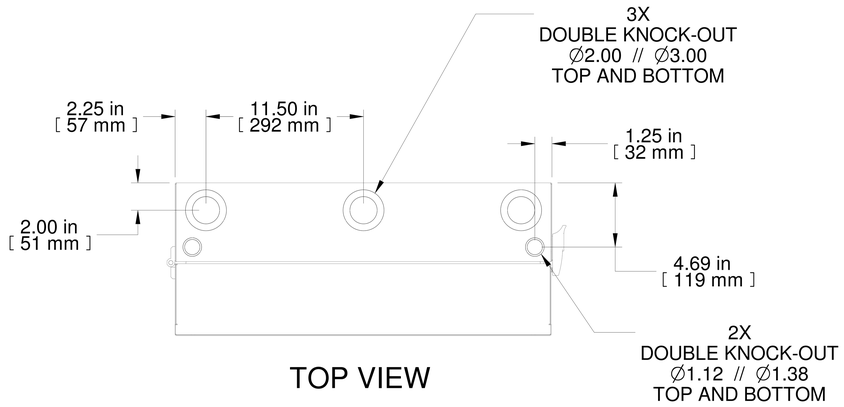

TOP VIEW

3 POSITIONS OF 4U RAILS

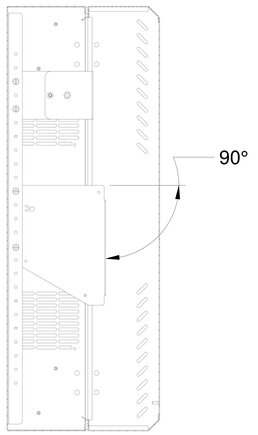

SECTION B-B
90° RAILS
MAX DEPTH = 7.00 IN

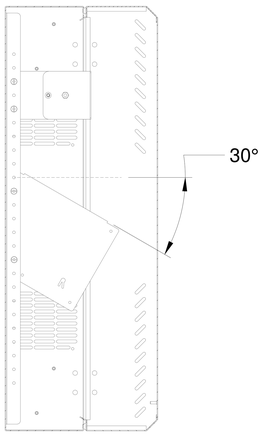

SECTION B-B
30° RAILS

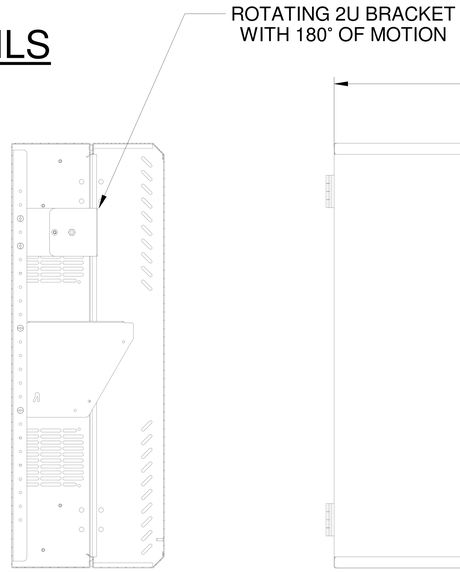

SECTION B-B
TOP MOUNT RAILS
MAX DEPTH = 29.00 IN

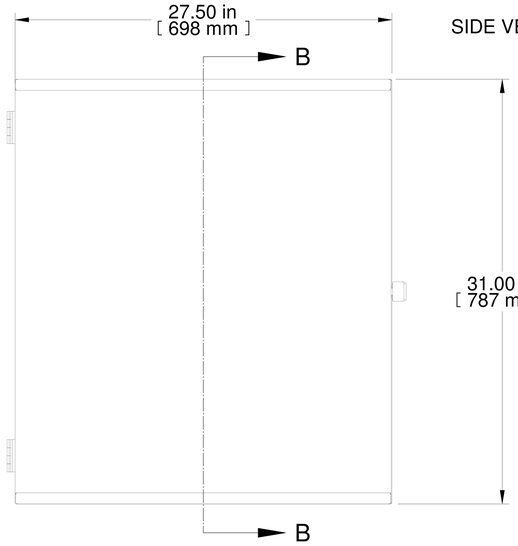

FRONT VIEW

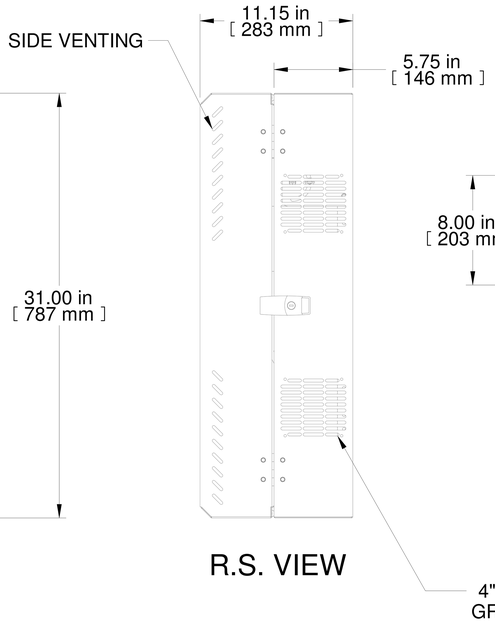

R.S. VIEW

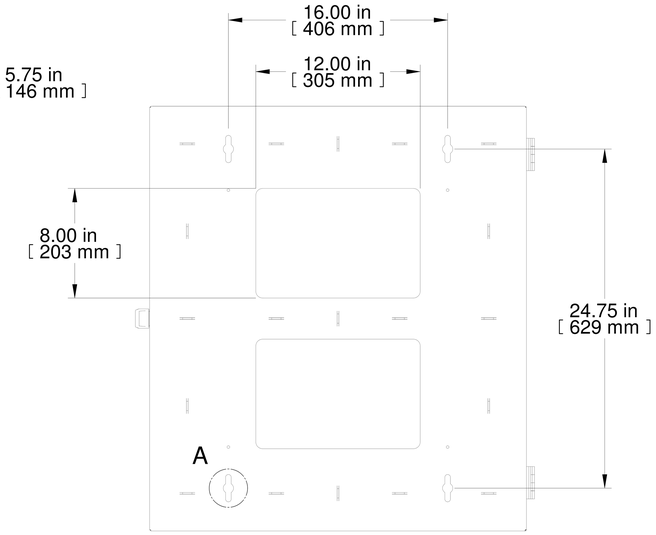

REAR VIEW

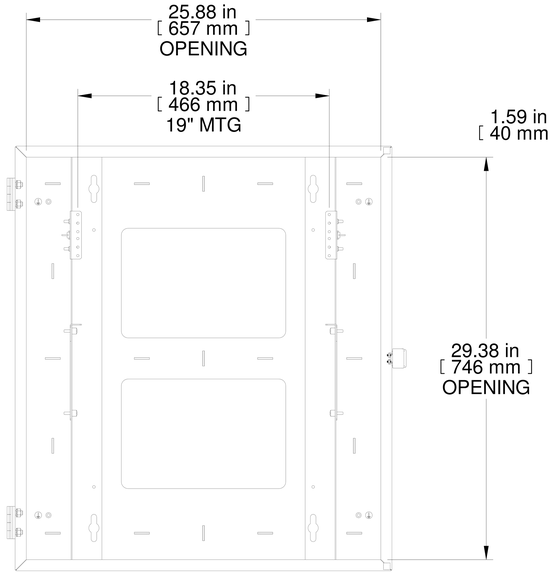

FRONT VIEW
DOOR REMOVED

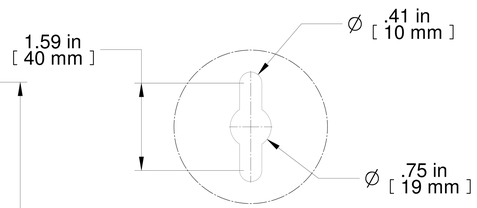

DETAIL A