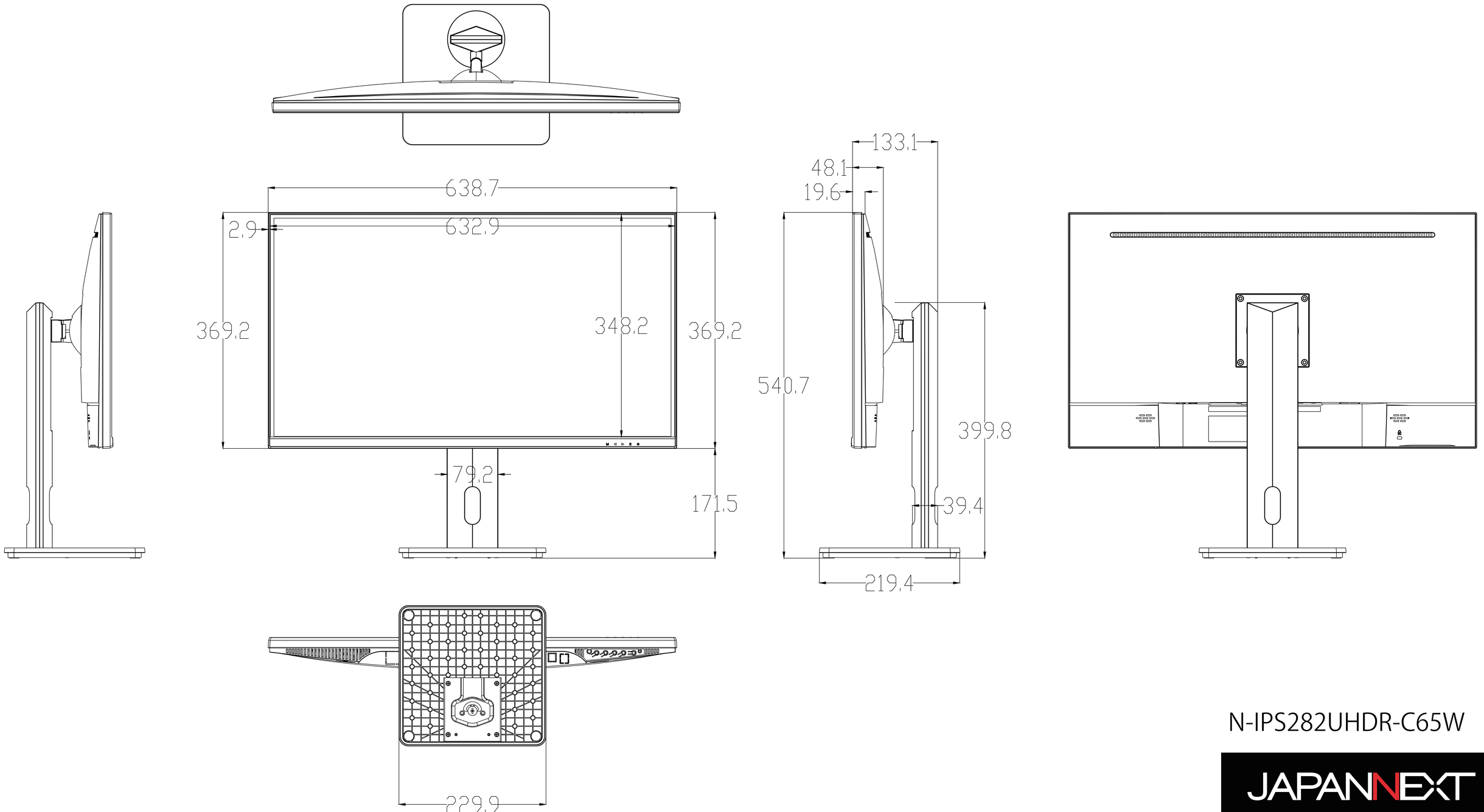

N-IPS282UHDR-C65W

JAPANNEXT